PHASE 2 SANITARY SEWER MAIN
LATERIAL 482, SWI
SHELLY'S ORCHARD ADDITION
PROJECT NO. 468-83407
OCA NO. 743917

GENERAL NOTES

Contractor will be required to provide a minimum advance notice of twenty-four (24) hours to utility companies prior to starting any excavation as follows:

Kansas One-Call	*687-2470*

The Contractor must notify the following in case of an emergency:

Cox Communications	*262-0661*
Kansas Gas Service	*383-8600*
K.G.E. Electric	*383-8600*
Peoples Natural Gas Company	*1-800-303-0357*
Southwestern Bell Telephone Company	*1-800-286-8313*
City of Wichita Water Department	*262-6000*
City of Wichita Sewer Maintenance	*262-6000*

Underground utility service lines and overhead utility pole lines are to be adjusted as necessary by others prior to construction unless the plans specifically call for their adjustment by the Contractor or unless the plans specifically identify a utility to be adjusted by its owner during construction. Existing utilities and their location, as shown on the plans, represent the best information obtainable for design. Location information has been obtained from the various utility companies and is either from company record drawings or company-provided field locations. The Contractor will be required to work around existing utilities within the right-of-way which do not conflict with proposed construction.

Rubble from the removal of miscellaneous structures and excess excavation which is to be wasted shall be disposed of on sites to be provided by the Contractor. These sites shall be approved by the Engineer as to suitability, appearance and site location. Locations that, in the opinion of the Engineer, will leave an unsightly appearance will not be approved.

All disposal sites must be approved by the Kansas Department of Health and Environment. Material either stockpiled or disposed of in a flood plain would require a Kansas State Board of Agriculture permit. Any material dumped in waters of the United States or wetlands is subject to U.S. Corps permitting regulations. Any material buried or stockpiled beyond approved of Engineers construction limits would require additional archeological investigations unless buried in a previously approved borrow location.

The Engineer shall take field ties to all quarter section corners. The Contractor shall set a City survey monument in the required location where such quarter section corners fall within the limits of pavement construction. Survey monuments will be furnished by the City. The Engineer will accurately located and install the iron at the quarter section corner. This work will not be paid for directly, but shall be considered subsidiary to the other pay items of work in the contract.

The Contractor shall notify pipeline companies at least 24 hours in advance of any work being performed across and/or adjacent to pipelines.

The Contractor shall give all property owners and/or tenants of developed property directly abutting the construction of this project a minimum of ten (10) days advance notice prior to start of construction.

The Contractor shall seed, fertilize and mulch all disturbed areas upon completion of construction. Incidental to the bid item for "Site Clearing and Restoration".

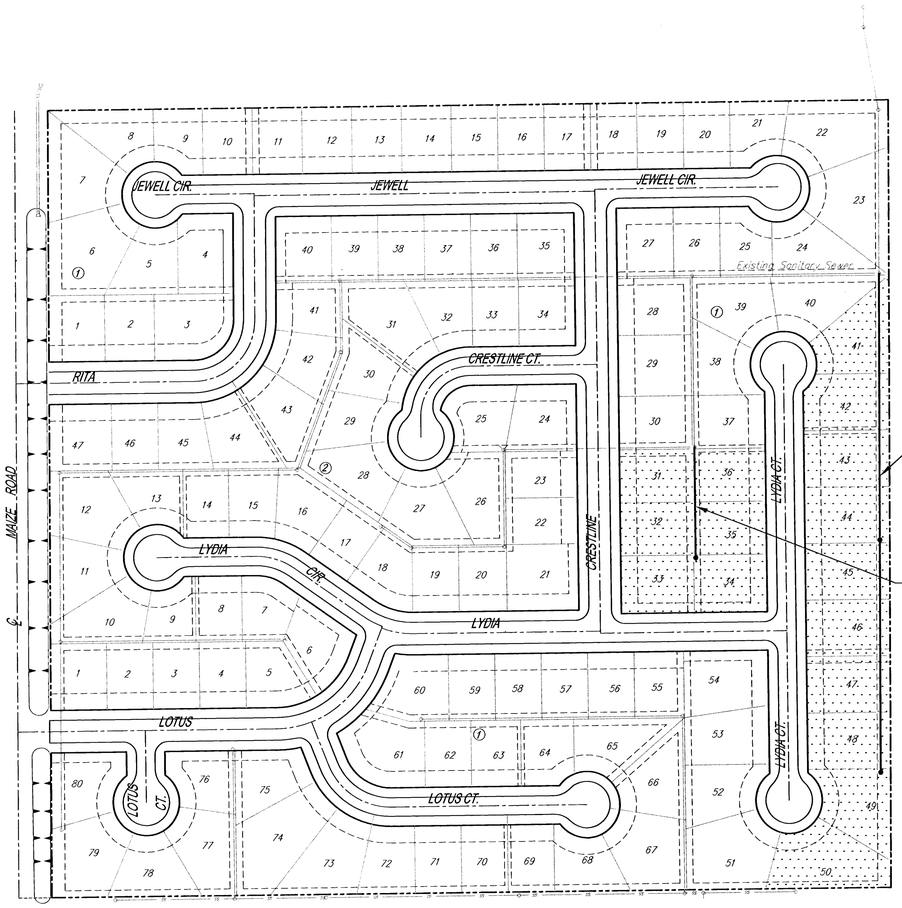

BENEFIT DISTRICT

Bench Marks

CITY OF WICHITA DISC @ MAIZE ROAD AND MAY STREET 31.5' S. AND 38.0' E. OF THE CENTERLINE OF BOTH.
ELEV. = 1317.67 (CITY DATUM)

INDEX

1. *TITLE SHEET*
2. *PLAN/PROFILE*
3. *TYPE 'P' MANHOLE DETAIL*
4. *MANHOLE FRAME AND COVER*
5. *EASEMENT GRADING*
6. *KEY MAP*
7. *FINAL PLAT*

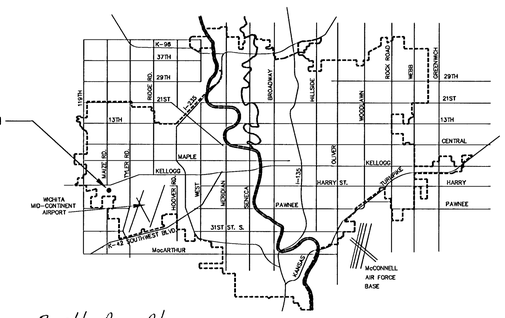

VICINITY MAP

Built Per Plan
9/30/02
R D L

Scale: 1" = 100'

KENNETH W. LESH
LICENSED
Land Surveyor
15373
3-13-02
KANSAS
PROFESSIONAL ENGINEER

CITY OF WICHITA, KANSAS
MICHAEL E. LINDEBAK, P.E. - CITY ENGINEER

Ruggles & Bohm, P.A.
Engineering, Surveying, Land Planning
924 North Main
Wichita, Kansas 67203
www.rbkansas.com
(316) 264-8008
(316) 264-4621 fax
E-mail: info@rbkansas.com

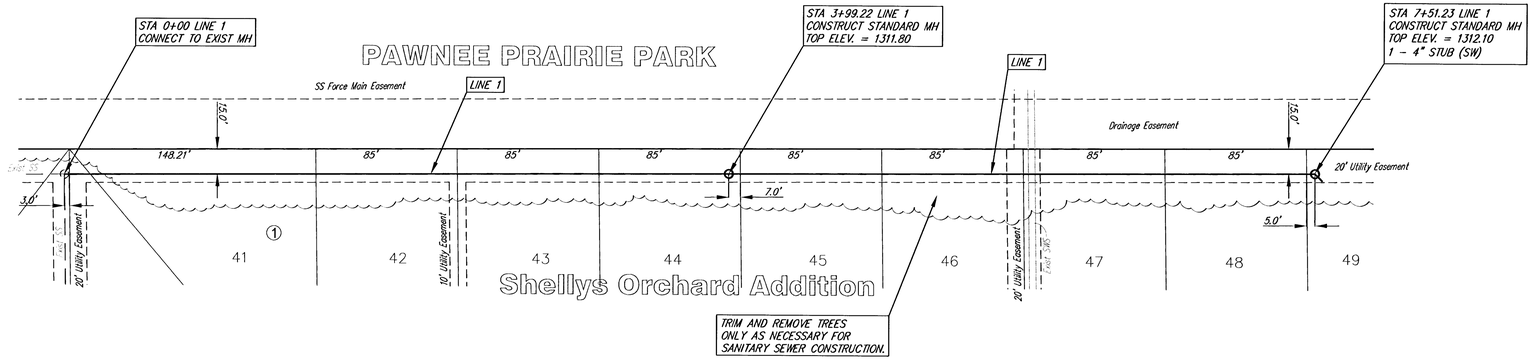

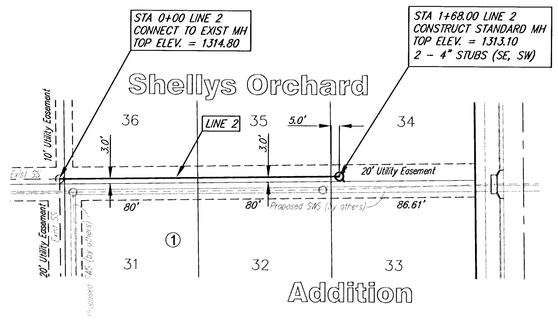

SCALE
Plan: 1" = 40'
Profile: 1" = 40' Horiz
1" = 5' Vert
IRON = ●

SCALE
Plan: 1" = 40'
Profile: 1" = 40' Horiz
1" = 5' Vert
IRON = ●

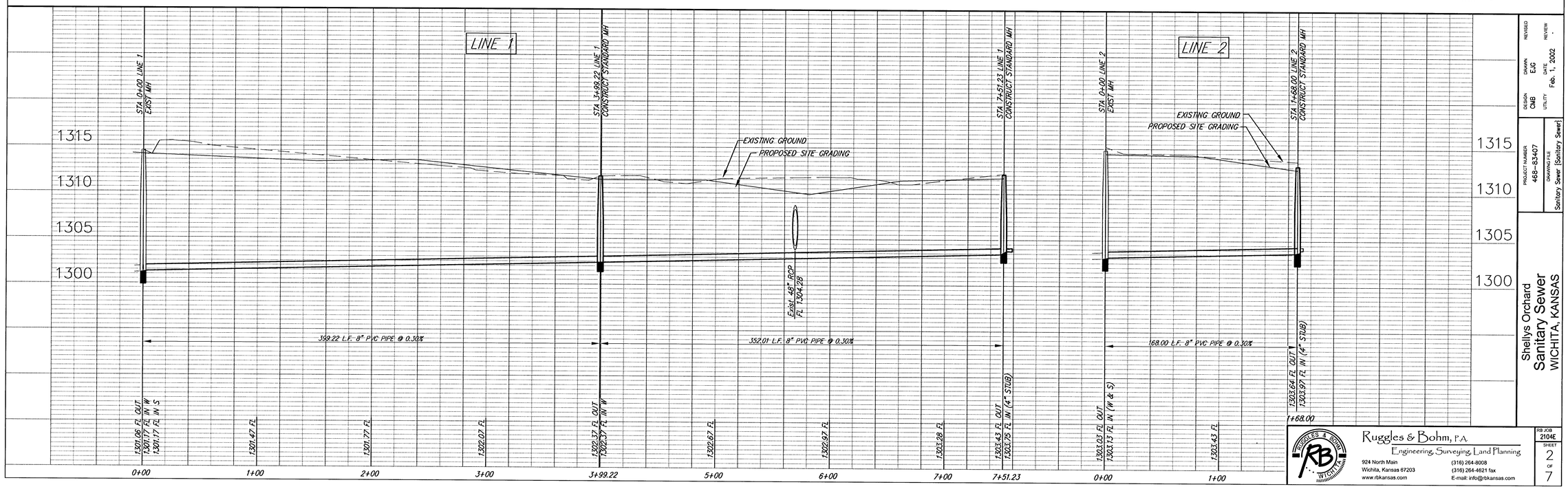

DESIGN CWB
DRAWN EJG
CHECKED
REVIEW
UTILITY
DATE Feb. 1, 2002

PROJECT NUMBER 468-83407
DRAWING FILE Sanitary Sewer [Sanitary Sewer]

Shellys Orchard
Sanitary Sewer
WICHITA, KANSAS

Ruggles & Bohm, P.A.
Engineering, Surveying, Land Planning
924 North Main
Wichita, Kansas 67203
www.rbkansas.com
(316) 264-8008
(316) 264-4621 fax
E-mail: info@rbkansas.com

RB JOB 2104E
SHEET 2 of 7

SEWER APPURTENANCES DETAILS

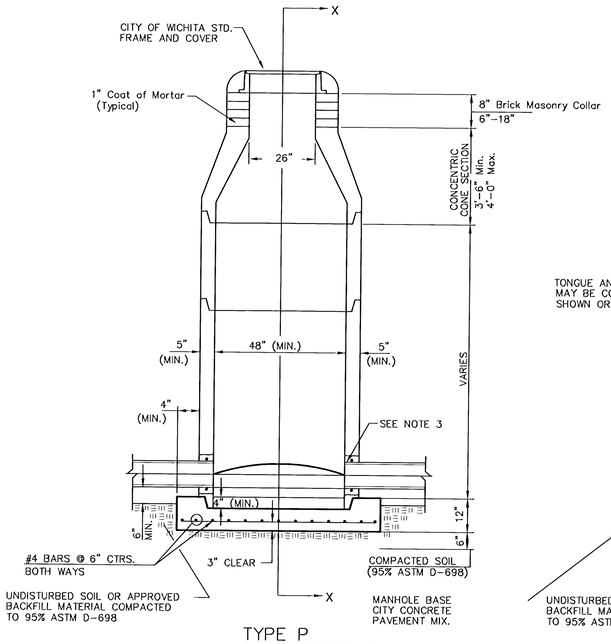

TYPE P
STANDARD MANHOLE

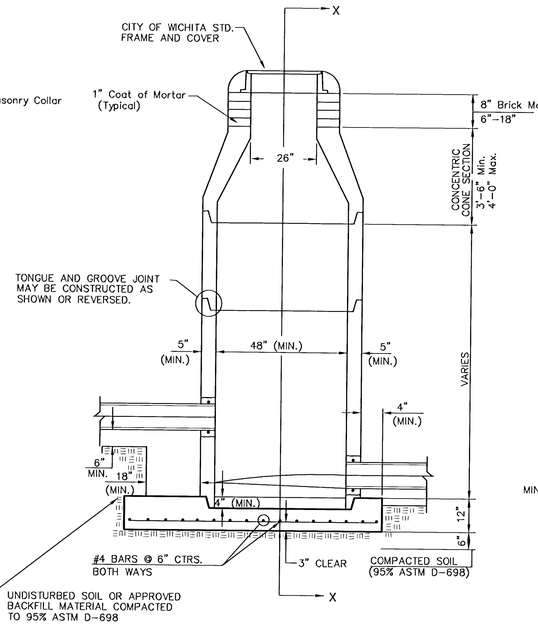

TYPE P
INSIDE DROP MANHOLE

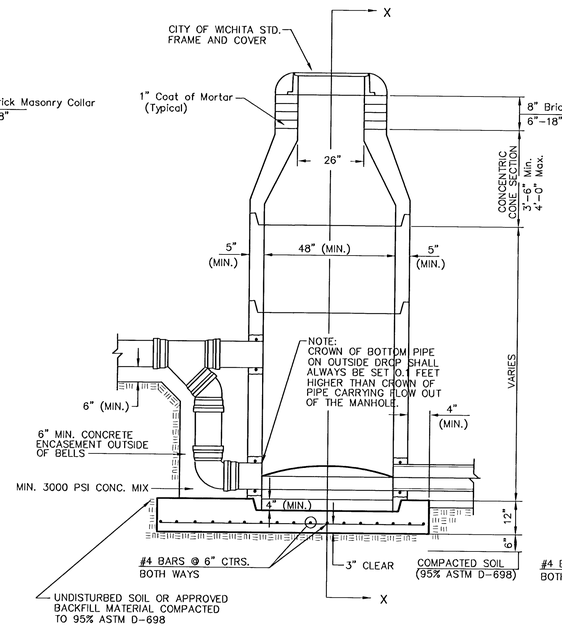

TYPE P
OUTSIDE DROP MANHOLE

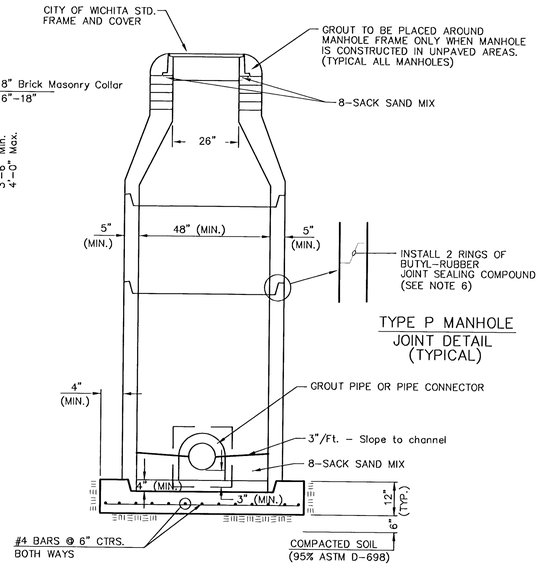

TYPE P MANHOLE
JOINT DETAIL
(TYPICAL)

SECTION X
(TYPICAL)

GENERAL NOTES

PRECAST MANHOLE NOTES

1. ALL PRECAST CONCRETE MANHOLE SECTIONS SHALL CONFORM TO THE LATEST REVISIONS OF A.S.T.M. C478 AS MODIFIED BY THE SPECIFICATIONS.
2. NON-SHRINK GROUT SHALL BE NON-METALLIC TYPE.
3. APPROVED FLEXIBLE WATERSTOP GASKETS SHALL BE INSTALLED TO JOIN THE SEWER TO THE MANHOLE WALL WHEN A.B.S. COMPOSITE PIPE OR P.V.C. PIPE IS USED. FOR OTHER TYPES OF PIPE THE SEWER SHALL BE GROUTED IN PLACE WITH NON-SHRINK GROUT. THE SEWER PIPE SHALL BE SUPPORTED WITH CONCRETE ENCASEMENT A MINIMUM OF 3 FEET FROM THE MANHOLE WALL AND TO THE FIRST JOINT FOR V.C.P. SUCH THAT THE JOINT REMAINS FLEXIBLE.
4. ALL INSIDE SURFACES OF THE CONCRETE MANHOLE WHICH WOULD BE EXPOSED TO SEWER GAS SHALL BE COATED WITH 2 COATS TNEMEC SERIES 66 HI-BUILD EPOXOLINE, DRY THICKNESS OF 8 MILS (MIN.)
5. EXTERIOR MANHOLE WALLS SHALL BE COATED WITH 1 COAT MOBILARMA 633 BITUMINOUS COATING.
6. JOINT SEALING COMPOUND SHALL BE KENT SEAL NO. 2 OR APPROVED EQUAL.
7. PRECAST MANHOLES SHALL BE SET AT LEAST 4 INCHES INTO THE MANHOLE BASE.
8. TOP OF MANHOLE FLOOR SLAB SHALL BE AT LEAST 3 INCHES BELOW THE FLOW LINE OF THE OUTLET PIPE TO INSURE SUFFICIENT MINIMUM THICKNESS OF SHAPED INVERT.
9. LIFTING HOLES SHALL BE FILLED WITH NON-SHRINK GROUT AND THE INTERIOR SURFACE COATED AS SPECIFIED.
10. MORTAR USED IN MASONRY CONSTRUCTION SHALL CONTAIN 8 SACKS OF CEMENT PER CUBIC YARD. CONCRETE USED IN MANHOLE BASES SHALL CONFORM TO THE REQUIREMENTS OF CONCRETE FOR CONCRETE PAVEMENT CONSTRUCTION AS SPECIFIED IN THE CITY STANDARD PAVING SPECIFICATIONS USING CITY CONCRETE PAVEMENT MIX WITHOUT AIR ENTRAINING ADMIXTURE. MORTAR SHALL BE PLACED AROUND THE MANHOLE RING AS SHOWN ON THE DRAWINGS WHEN MANHOLES ARE CONSTRUCTED IN UNPAVED AREAS. MANHOLES CONSTRUCTED WHERE PIPE SIZES ARE SMALLER THAN 24" SHALL HAVE AN INSIDE DIAMETER OF 4'. MANHOLES CONSTRUCTED WHERE PIPE SIZES ARE 24" OR LARGER SHALL HAVE AN INSIDE DIAMETER OF 5'. COMPLETED MANHOLE SHALL BE WITHOUT LEAKS AND WATER TIGHT.
11. REINFORCING STEEL SHALL BE INSTALLED IN THE MANHOLE BASES AND SHALL CONSIST OF NO. 4 BARS PLACED ON 6" CENTERS IN BOTH DIRECTIONS. THE MANHOLE BASE REINFORCEMENT SHALL BE PLACED AT LEAST 3" ABOVE THE BOTTOM OF THE MANHOLE BASE. ALL COSTS FOR FURNISHING AND INSTALLING REINFORCING STEEL SHALL BE INCLUDED IN THE UNIT PRICE BID FOR THE MANHOLE.
12. OPENINGS SHALL BE CUT INTO THE MANHOLE WALL WHEN OUTSIDE DROPS ARE CONSTRUCTED ON EXISTING MANHOLES. SUCH OPENINGS CUT INTO EXISTING MANHOLES SHALL BE AS SMALL AS PRACTICAL TO FACILITATE INSTALLING AND GROUTING THE NEW PIPE IN PLACE. WATERSTOP GASKETS SHALL BE USED WITH P.V.C. AND A.B.S. COMPOSITE PIPE. THE NEW PIPE SHALL BE GROUTED INTO THE OPENING USING AN APPROVED NONSHRINK GROUT FOR THE FULL MANHOLE WALL THICKNESS. THE EXTERIOR OF THE COMPLETED CONNECTION SHALL BE SEALED WITH AN APPROVED BITUMINOUS COATING SUCH THAT THE CONNECTION WILL BE WATER TIGHT. FLOOR OF MANHOLE SHALL BE MODIFIED TO FORM NEW FLOW CHANNEL FOR THE NEW CONNECTION AS INDICATED BY THE DRAWING. THIS WORK, INCLUDING MODIFICATION OF MANHOLE FLOOR, SHALL BE PAID FOR AT THE UNIT PRICE BID FOR OUTSIDE DROP STACK CONSTRUCTED ON EXISTING MANHOLE.
13. THE FLOORS OF ALL MANHOLES SHALL BE SHAPED WITH FLOW CHANNELS SUCH THAT THE MANHOLES WILL BE SELF CLEANING AND FREE OF AREAS WHERE SOLIDS COULD BE DEPOSITED AS SEWAGE FLOWS THROUGH THE MANHOLE FROM ALL INLET PIPES TO THE OUTLET PIPE. FLOW CHANNELS SHALL BE FORMED TO MATCH THE BOTTOM HALVES OF THE INFLOWING PIPES AND THE OUTFLOWING PIPE AS SHOWN BY THE DRAWINGS EXCEPT FOR INSIDE DROP MANHOLES. FLOW CHANNELS FOR INSIDE DROP MANHOLES SHALL BE CONSTRUCTED AS INDICATED BY THE DRAWING. MANHOLE FLOORS SHALL HAVE SLOPES OF 3 INCHES PER FOOT IN THE AREAS OUTSIDE OF THE FLOW CHANNELS SLOPED TOWARD THE FLOW CHANNELS. PIPES LAID THROUGH MANHOLES SHALL HAVE THE TOP HALF REMOVED TO NEAT LINES FOR THE FULL INSIDE DIAMETER OF THE MANHOLE. MANHOLE FLOORS SHALL THEN BE SHAPED AROUND THE BOTTOM HALF OF THE PIPE WHICH FORMS THE FLOW CHANNEL.
14. PIPES INSTALLED WITHIN THE EXCAVATION MADE FOR THE MANHOLE SHALL BE CRADLED WITH CONCRETE TO THE LIMITS OF THE MANHOLE EXCAVATION. WHEN CLAY PIPE IS USED, THE CRADLE SHALL EXTEND TO THE FIRST JOINT OUTSIDE THE MAHOLE. THE CRADLE SHALL BE TERMINATED AT THE CLAY PIPE JOINT IN A MANNER WHICH WILL MAINTAIN THE FLEXIBILITY OF THE JOINT. COST OF CRADLE WITHIN MANHOLE EXCAVATION OR TO CLAY PIPE JOINTS ADJACENT TO MANHOLE SHALL BE INCLUDED IN THE UNIT PRICE BID FOR THE MANHOLE.
15. MANHOLE COVER CASTINGS AND MANHOLE FRAME CASTINGS SHALL CONFORM TO THE REQUIREMENTS AS INDICATED IN THE STANDARD SPECIFICATIONS AND AS SHOWN IN THE STANDARD DETAIL DRAWING.
16. THE VERTICAL DROP IN INSIDE DROP MANHOLES SHALL NOT EXCEED 2' FOR INFLOWING PIPES SIZED 12" OR SMALLER AND 2' FOR INFLOWING PIPES LARGER THAN 12". THE CROWNS OF INFLOWING PIPES SHALL NEVER BE SET LOWER THAN THE CROWN OF THE OUTFLOWING PIPE.
17. STANDARD MANHOLES AND STANDARD INSIDE DROP MANHOLES SHALL BE BID AS STANDARD MANHOLES FOR THE TYPE AND DIAMETER INDICATED. OUTSIDE DROP MANHOLES SHALL BE BID AS STANDARD OUTSIDE DROP MANHOLES FOR THE TYPE AND DIAMETER INDICATED. ALL MANHOLE DIAMETERS WILL BE 4' UNLESS INDICATED OTHERWISE.
18. A BRICK MASONRY COLLAR SHALL BE INSTALLED BETWEEN THE CAST IRON FRAME AND THE CONCENTRIC CONE. THE COLLAR WILL HAVE 8" WALLS AND A VERTICAL HEIGHT OF 6" MINIMUM AND 18" MAXIMUM. A 1" COAT OF MORTAR WILL BE PLASTERED ON THE OUTSIDE OF THE COLLAR. THE USE OF PRE-CAST CONCRETE SPACERS FOR MANHOLE TOP ADJUSTMENT IS ALSO ALLOWED.

THE CITY OF WICHITA

CITY ENGINEER'S OFFICE
CITY HALL - SEVENTH FLOOR
455 NORTH MAIN STREET
WICHITA, KANSAS 67202
(316) 268-4501
(316) 268-4114 FAX

STANDARD TYPE 'P' MANHOLES

M. E. LINDEBAK P.E. - CITY ENGINEER

PROJECT NUMBER	OCA #
468-83407	743917
DATE MAR 96	SHEET 3 OF 7

MANHOLE FRAME AND COVER DETAIL

ADOPTED AS STANDARD DESIGN BY
CITY OF WICHITA, KANSAS

MANHOLE COVER
Weight = 180 Lbs.

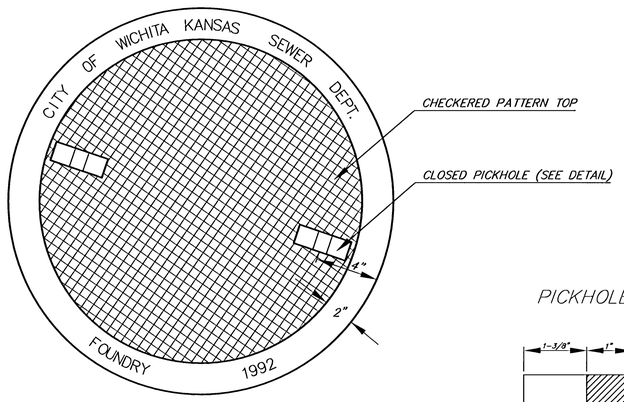

TOP VIEW

PICKHOLE DETAIL

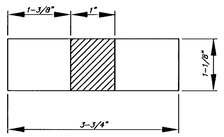

TOP VIEW

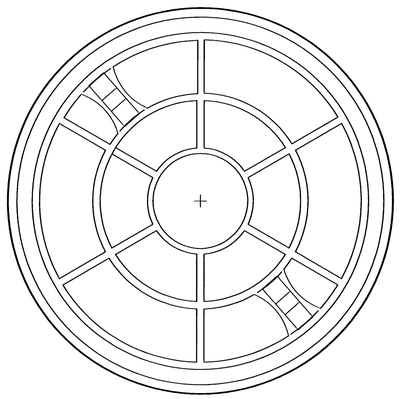

BOTTOM VIEW

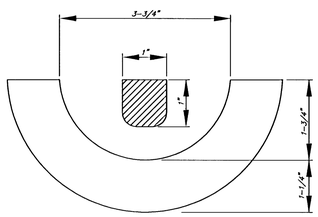

SECTION VIEW

MANHOLE FRAME
Weight = 240 Lbs.

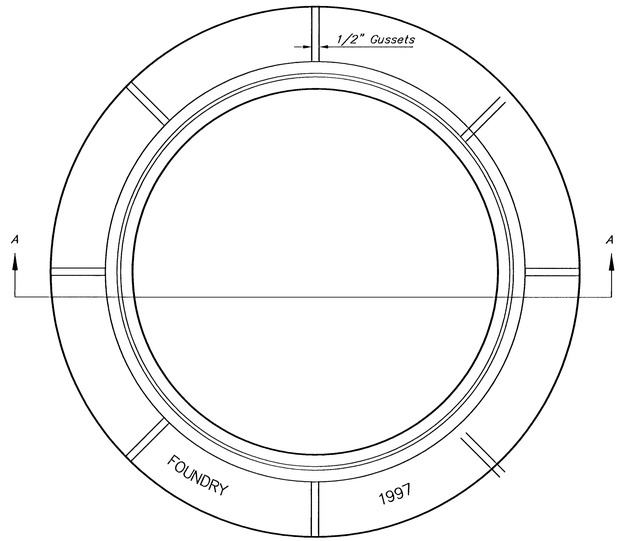

TOP VIEW

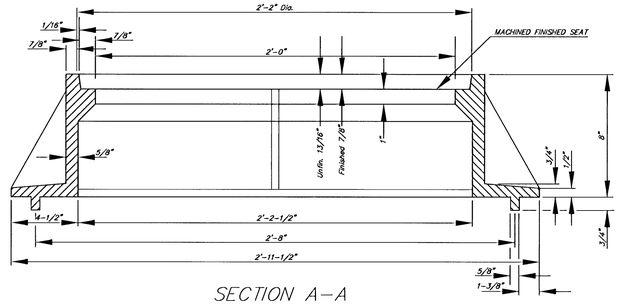

SECTION A–A
MUD RING

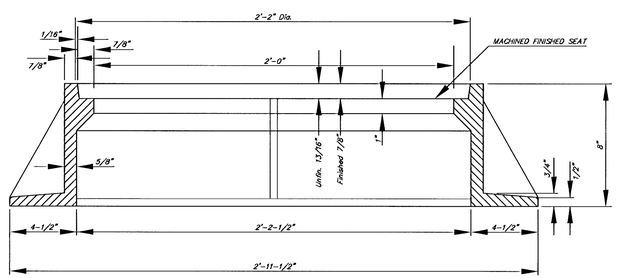

SECTION A–A

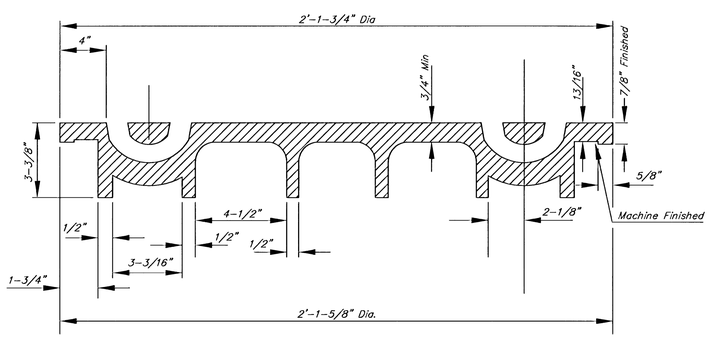

SECTION VIEW

GENERAL NOTES

1. MANHOLE CASTINGS SHALL BE MANUFACTURED USING GOOD QUALITY GRAY IRON CONFORMING TO CLASS 30 OF A.S.T.M. DESIGNATION A-48. DIMENSIONS AND WEIGHTS SHOWN ON THE DETAILED DRAWINGS SHALL BE CONSIDERED AS MINIMUM REQUIREMENTS AND ANY DEVIATIONS FROM THE DIMENSIONS SHOWN MUST BE SPECIFICALLY APPROVED. THE FINISHED CASTINGS SHALL BE OF UNIFORM QUALITY, FREE FROM BLOWHOLES, POROSITY, HARD SPOTS, SHRINKAGE DISTORTIONS OR OTHER DEFECTS.

2. MANHOLE CASTINGS SHALL WEIGH A MINIMUM OF 180 POUNDS ON THE SOLID COVER AND 240 POUNDS ON THE MANHOLE RING. THIS IS A TOTAL OF 420 POUNDS ON A RING AND COVER SET. CASTINGS WEIGHING LESS THAN THE MINIMUM SPECIFICATIONS WILL NOT BE ACCEPTED.

3. MANHOLE CASTINGS SHALL BE MANUFACTURED SUCH THAT A COVER MANUFACTURED BY ANY ONE FOUNDARY WILL FIT INTERCHANGEABLY INTO A FRAME MANUFACTURED BY ANOTHER FOUNDRY AND STILL MEET ALLOWABLE CLEARANCES AND NON-ROCKING REQUIREMENTS. THIS WILL REQUIRE MANUFACTURING OF THE MATCHING FACES ON THE COVER AND THE FRAME TO CLOSE TOLERANCES.

4. THE OUTSIDE CIRCUMFERENCE OF THE VERTICAL FACE OF THE COVER AND THE INSIDE CIRCUMFERENCE OF THE VERTICAL FACE IN THE FRAME RECESS SHALL BE MANUFACTURED TO TOLERANCES SUCH THAT THE CLEARANCE BETWEEN THE COVER AND FRAME WILL NOT EXCEED 1/8" AT ANY POINT AROUND THE CIRCUMFERENCE OF THE COVER. THE SEATING SURFACES BETWEEN THE COVER AND FRAME SHALL BE MACHINED SUCH THAT THESE SEATING SURFACES SHALL MAKE FULL CONTACT FOR THEIR FULL CIRCUMFERENCE TO PRECLUDE THE COVER FROM ROCKING IN THE FRAME.

5. THE MANHOLE FRAME AND COVER SHALL BE MARKED WITH LETTERING INDICATING THE NAME OF THE MANUFACTURER AND THE YEAR WHEN THE COVER OR FRAME WAS CAST. THE COVER SHALL BE FURTHER IDENTIFIED WITH REGARDS TO OWNERSHIP USING LETTERS AT LEAST 1 INCH IN HEIGHT. THIS IDENTIFICATION SHALL BE "CITY OF WICHITA SEWER DEPARTMENT". THE WORD DEPARTMENT MAY BE ABBREVIATED. THE TEXTURE OF THE TOP SURFACE OF THE COVER SHALL BE MANUFACTURED IN A CHECKERED PATTERN DESIGN AS INDICATED ON THE DRAWINGS. SMOOTH BLOCKOUTS SHALL BE UTILIZED TO HIGHLIGHT THE LETTERING ON THE COVER SURFACE. THE TOTAL AREA OF SMOOTH SURFACE BLOCKOUT SHALL NOT EXCEED THE AREA AS INDICATED ON THE DRAWING. POSITIONING OF SMOOTH BLOCKOUTS AND LETTERING MAY VARY FROM THAT SHOWN ON THE DETAILED DRAWING.

THE CITY OF WICHITA

CITY ENGINEER'S OFFICE
CITY HALL – SEVENTH FLOOR
455 NORTH MAIN STREET
WICHITA, KANSAS 67202
(316) 268-4501
(316) 268-4114 FAX

MANHOLE FRAME AND COVER

M. E. LINDEBAK P.E. – CITY ENGINEER

PROJECT NUMBER	OCA #
468-83407	743917
DATE MAR '96	SHEET 4 OF 7

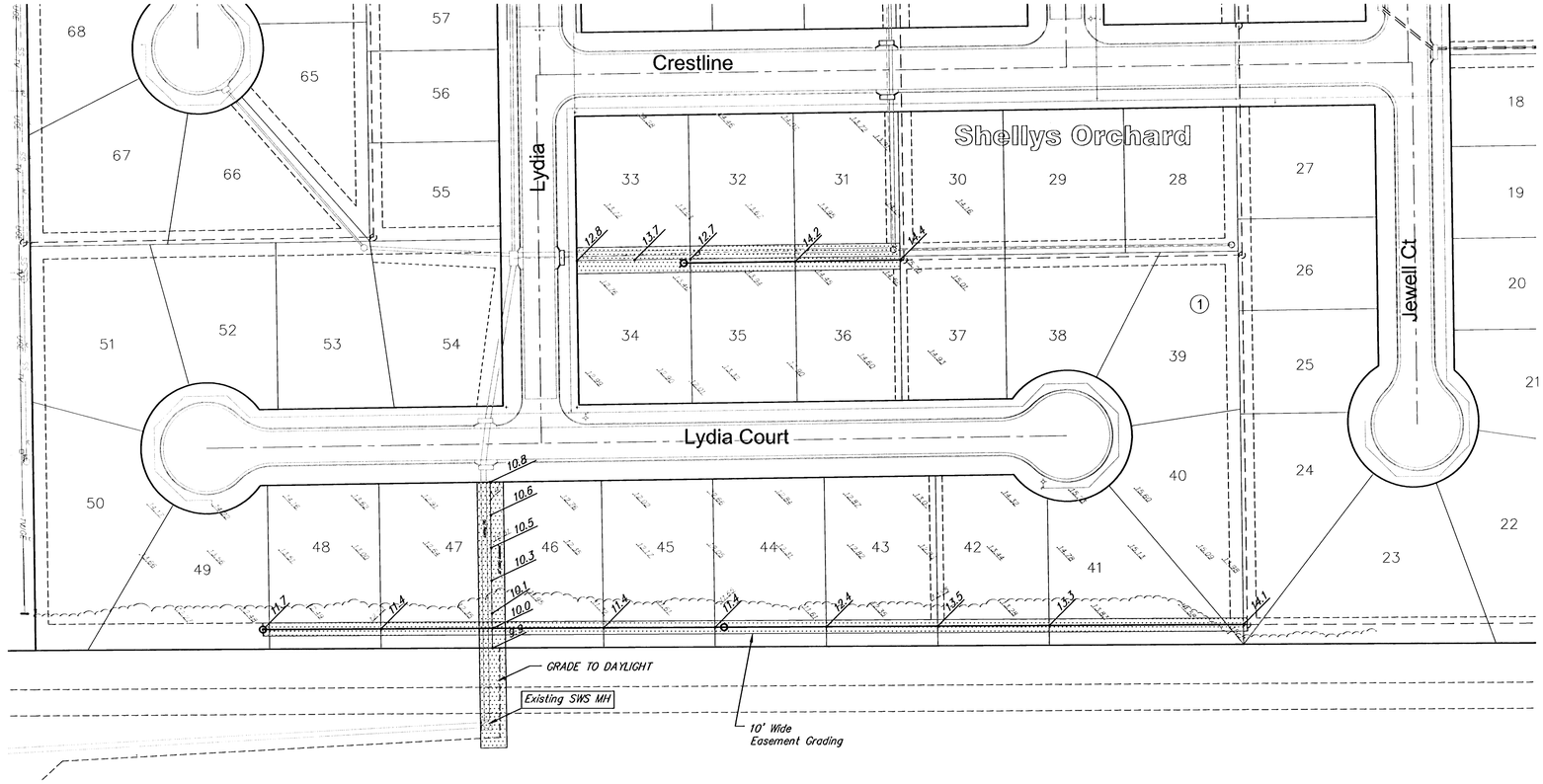

SCALE 1" = 50'
IRON = ●
EXISTING ELEV = 12.00

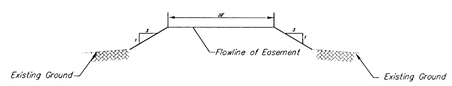

EASEMENT GRADING FILL SECTION



EASEMENT GRADING CUT SECTION

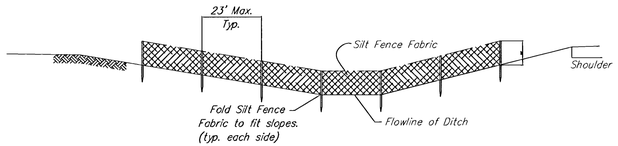

SILT FENCE DITCH CHECK

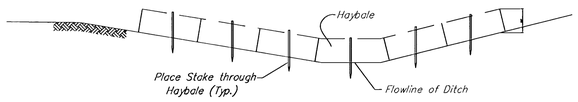

HAY BALE DITCH CHECK

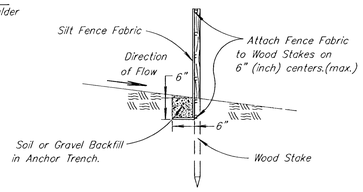

SILT FENCE DITCH CHECK SECTION

NOTE: For clarity of details, this view has been enlarged.

GENERAL NOTES

STRAW OR HAY BALE NOTES:

1. Place Bales tightly together, with loose straw or hay wedged between Bales to close off any openings.
2. Wood Stakes shall be 2" x 2" (nom.) x 4'-0" long (min.)
3. Use as many Bales as necessary to completely block the entire width of ditch flowline, with excess Bale length cut into fore and back slopes.
4. Use as many Bales as necessary on fore and back slopes to insure water does not flow around barrier.
5. Use only twine to bind bales. The use of wire binding is prohibited because it does not readily biodegrade.

SILT FENCE NOTES:

1. Wood Stakes shall be 2" x 2" (nom.) x 5'-0" long (min.)
2. Attach Fence Fabric to wood stakes with staples, wire, or nails.
3. Use as many wood stakes as necessary to achieve a maximum spacing of 5' across ditch cross section.

TEMPORARY DITCH CHECK SPACING	
DITCH ℄ SLOPE (%)	SPACING INTERVAL (Ft.)
1.0	200
1.5	133
2.0	100
2.5	80
3.0	66
3.5	57
4.0	50
4.5	44
5.0	40
5.5	38
6.0	35
6.5	30
7.0	28
7.5	28
8.0	25
8.5	23
9.0	22
9.5	21
10.0	20

REVISED

Shellys Orchard
Easement Grading
WICHITA, KANSAS

Ruggles & Bohm, P.A.
Engineering, Surveying, Land Planning
924 North Main
Wichita, Kansas 67203
www.rbkansas.com
(316) 264-8008
(316) 264-4621 fax
E-mail: info@rbkansas.com

DESIGN	CMB
DRAWN	EJG
REVIEW	
UTILITY	
DATE	Feb. 4, 2002
RB JOB	204E
SHEET	5 OF 7
DRAWING FILE	Sanitary Sewer [Esmt Grading]
PROJECT NUMBER	468-83407

1	N 18700.34	E 20059.04	Addition Corner
2	N 18717.97	E 21324.59	Addition Corner
3	N 19904.07	E 21318.59	Addition Corner
4	N 19885.72	E 20050.80	Addition Corner
5	N 19134.51	E 20853.39	Block Corner
6	N 19129.44	E 20917.47	Block Corner
7	N 19475.08	E 20848.46	Block Corner
8	N 19533.07	E 20847.62	Block Corner
9	N 19530.76	E 20688.01	PC
10	N 19472.77	E 20688.85	PC
11	N 19434.91	E 20644.24	PT
12	N 19435.37	E 20585.87	PT
13	N 19733.20	E 20844.72	Block Corner
14	N 19740.12	E 20908.63	Block Corner
15	N 19463.55	E 21132.65	PC
16	N 19464.39	E 21190.65	PT
17	N 19132.62	E 21137.44	Block Corner
18	N 19074.63	E 21138.28	Block Corner
19	N 18888.69	E 21139.73	PC
20	N 18889.53	E 21198.97	PT
60	N 19642.70	E 21304.95	EXISTING SS MH
61	N 19241.49	E 21306.94	SS MH
62	N 18891.48	E 21308.71	SS MH
63	N 19380.65	E 21026.84	EXISTING SS MH
64	N 19212.67	E 21029.27	SS MH

EXISTING DRAINAGE DEDICATION FILM 414, PAGE 845

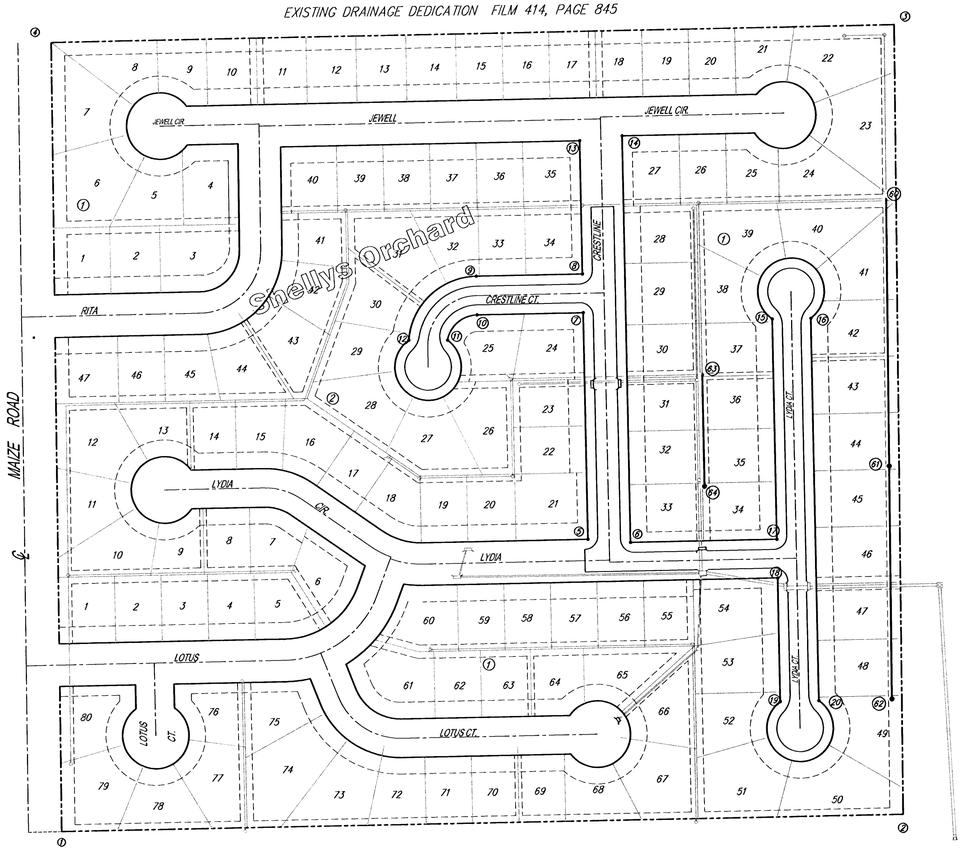

Scale: 1" = 100'

Shellys Orchard
Key Map
WICHITA, KANSAS

Ruggles & Bohm, P.A.
Engineering, Surveying, Land Planning
924 North Main
Wichita, Kansas 67203
www.rbkansas.com
(316) 264-8008
(316) 264-4621 fax
E-mail: info@rbkansas.com

DESIGN CMB
DRAWN EJG
REVIEW
UTILITY
DATE Jan. 31, 2002
SHEET 6 OF 7
DRAWING FILE Paving Details {KEY MAP}
PROJECT NUMBER 468-83407
SHEET NO. 204E

SHELLY'S ORCHARD ADDITION

WICHITA, SEDGWICK COUNTY, KANSAS

State of Kansas) SS
Sedgwick County)

We, Savoy, Ruggles & Bohm, P.A., Surveyors in aforesaid county and state do hereby certify that, under the supervision of the undersigned, we have surveyed and platted "SHELLY'S ORCHARD ADDITION", Wichita, Sedgwick County, Kansas and that the accompanying plat is a true and correct exhibit of the property surveyed, described as follows:

That part of the NW1/4 of the SW1/4 of Sec 32, Twp. 27-S, R-1-W of the 6th P.M., Sedgwick County, Kansas, except the north 115 feet thereof.

All Public easements and dedications being vacated by virtue of K.S.A. 12-512(b).

Savoy, Ruggles & Bohm, P.A.

Date _____

_____ Surveyor
Mark A. Savoy RLS #788

Know all men by these presents that we, the undersigned have caused the land described in the suveyor's certificate to be platted into Lots, Blocks, Reserves and Streets to be known as "SHELLY'S ORCHARD ADDITION", Wichita, Sedgwick County Kansas. The utility easements are hereby granted as indicated for the construction and maintenance of all public utilities. The Streets are hereby dedicated to and for the use of the public. Access Controls are hereby granted to the City of Wichita (as indicated on the face of the plat), with the location of openings to be approved by the City Engineer. Minimum building pad elevation for lowest opening to a structure is as shown on the face of the plat.

Rick Thompson Construction Inc.

_____ President
Rick Thompson

State of Kansas) SS
Sedgwick County)

The foregoing instrument acknowledged before me, this _____ day of _____ 1998, by Rick Thompson, President, Rick Thompson Construction Inc., on behalf of the corporation.

_____ Notary Public

My App't. Exp. _____

This plat of "SHELLY'S ORCHARD ADDITION", Wichita, Sedgwick County, Kansas, has been submitted to and approved by the Wichita-Sedgwick County Metropolitan Area Planning Commission, Wichita, Kansas.
Dated this ____ day of _____, 1997.

Wichita-Sedgwick County Metropolitan Area Planning Commission

_____ Chairman
John C. Frye

_____ Secretary
Marvin S. Krout

This plat approved and all dedications shown hereon, accepted by the City Council of the City of Wichita, Kansas, this ____ day of _____, 1998.

_____ Mayor
Bob Knight

_____ City Clerk
Pat Burnett

Entered on transfer record this ____ day of _____, 1998.

_____ County Clerk
James Alford

State of Kansas) SS
Sedgwick County)

This is to certify that this plat has been filed for record in the office of the Register of Deeds, this ____ day of _____, 1998, at _____ o'clock __M: and is duly recorded.

_____ Register of Deeds
Larry Consolver

_____ Deputy
Michael D. Hurtt

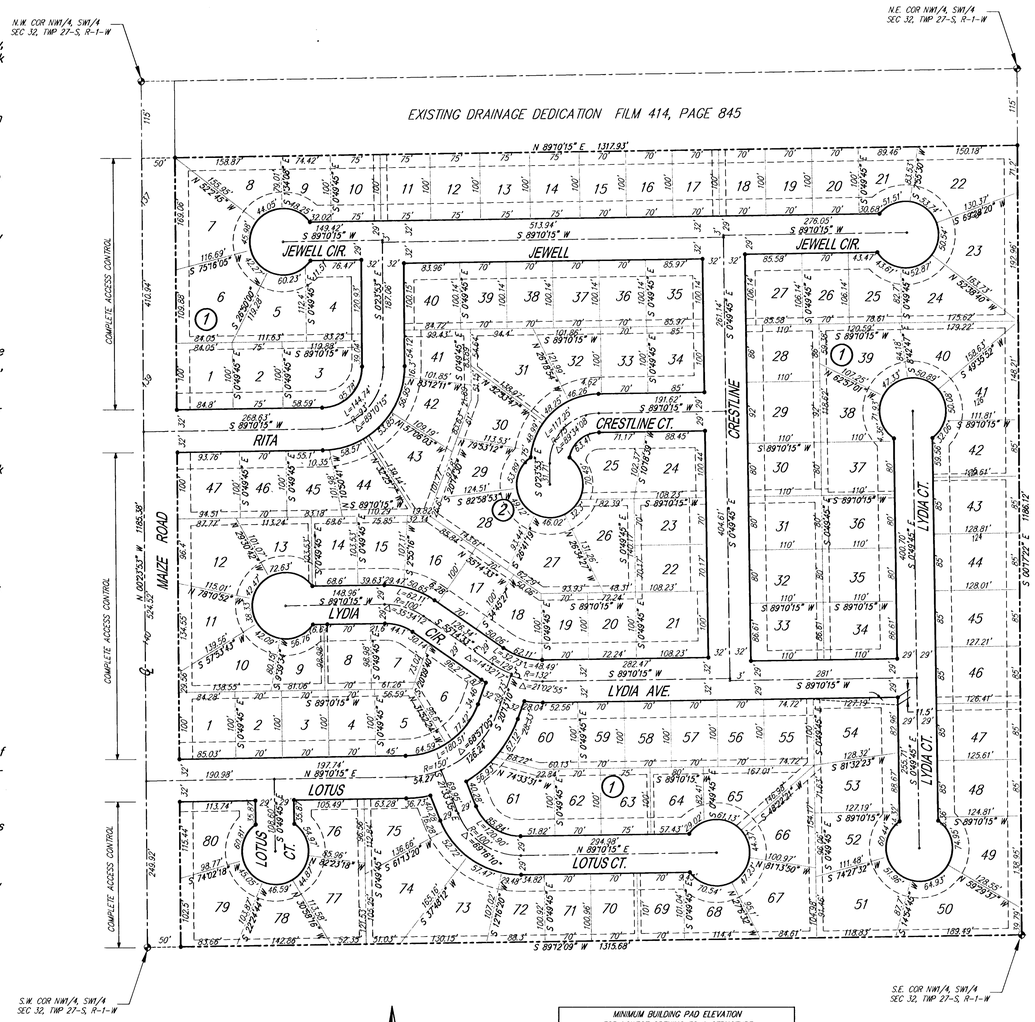

1" = 100'
● = 1/2" REBAR W/5918 CAP
S.B. = BUILDING SETBACK
C.A.C. = COMPLETE ACCESS CONTROL

MINIMUM BUILDING PAD ELEVATION FOR LOWEST OPENING TO A STRUCTURE			
LOT	BLOCK	ELEVATION	
		CITY DATUM	N.G.V.D.
8, 9, 10	1	1331.5	1320.9
11, 12, 13	1	1332.0	1319.4
14, 15, 16	1	1330.5	1317.9
17, 18, 19	1	1330.0	1317.4
20, 21, 22	1	1329.5	1316.9

BENCHMARK:
City of Wichita Benchmark disc @ Maize Road and May Street
31.5' S. and 38' E. of centerline both.
Elev.=1317.67 (City Datum)
Elev.=1325.07 (NGVD)

DWG FILE: 00536PF-R.L.I.
PROJECT NO. 96F00536P

Ruggles & Bohm, P.A.
Engineering, Surveying, Land Planning
924 North Main (316) 264-8008
Wichita, Kansas 67203 (316) 264-4621 fax
www.rbkansas.com E-mail: info@rbkansas.com

18-13-03-03