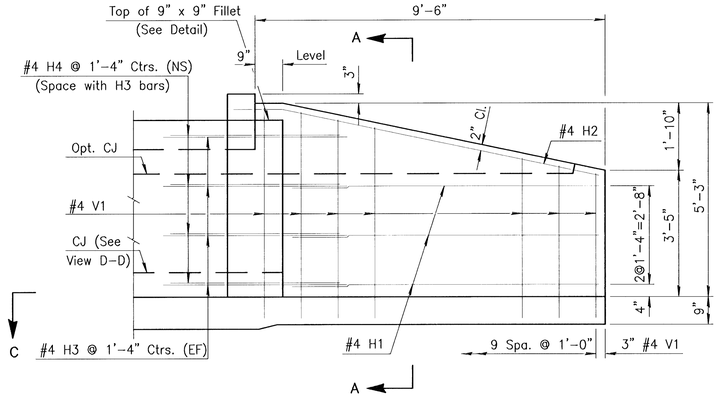

ELEVATION OF WINGWALL

(Backface Shown)

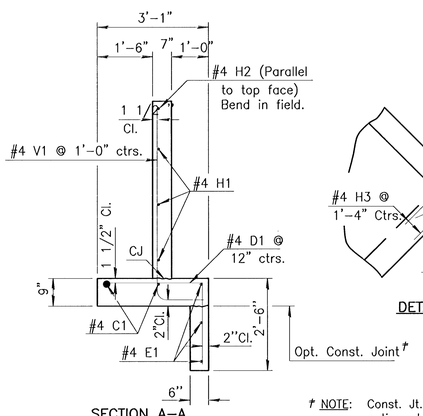

SECTION A-A

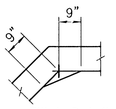

Fillet Detail

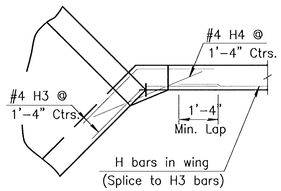

DETAIL OF 9" x 9" FILLET

(Plan View)

GENERAL NOTES

UNIT STRESSES: Class AAA Concrete; f'c = 4,000 p.s.i.
Reinforcing Steel; fy = 60,000 p.s.i.

CONCRETE: Class AAA Concrete shall be used throughout. Bevel all exposed edges with a 3/4 inch triangular moulding.

REINFORCING: All reinforcing shall conform to ASTM A615, Grade 60. Welded Wire Fabric shall conform to ASTM A185. All dimensions relative to reinforcing steel shall be to center-line of bar unless otherwise noted.

QUANTITIES: Wingwall Quantities include all quantities outside the neat lines of the box, excluding the hubguard.

APRON: A 5" concrete slab shall be constructed between the downstream wings in locations subject to scour only when specified on the plans or by the Engineer. Wire Reinforcing mesh shall be electrically welded and shall be composed of 6 x 6-W1.4 x W1.4 welded wire fabric and shall be classified as pounds of reinforcing.

FOUNDATION AND BACKFILL MATERIAL: Soils judged as high plasticity clays, fat clays, expansive clays, or organic clays are unsuitable for foundation and/or backfill material for wingwalls and will not be used. Where these conditions exist, Foundation Stabiliation and/or Granular Backfill (Wingwalls) shall be used as determined by the Engineer.

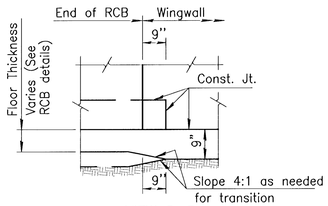

VIEW D-D

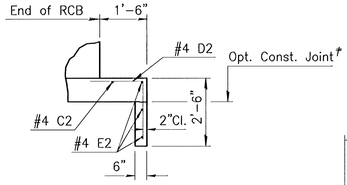

SECTION E-E

NOTE:
EF = Each Face
NS = Near Side
FS = Far Side
CJ = Const. Joint

† NOTE: Const. Jt. may be used at Contractor's option when approved by the Engineer. D1 bars or mesh may be spliced thus: Minimum overlap shall be 1'-3". No increase in quantities or cost shall be allowed when Contractor elects this option.

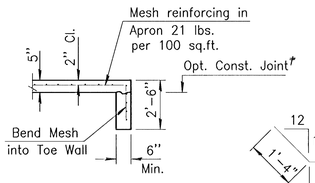

SECTION B-B

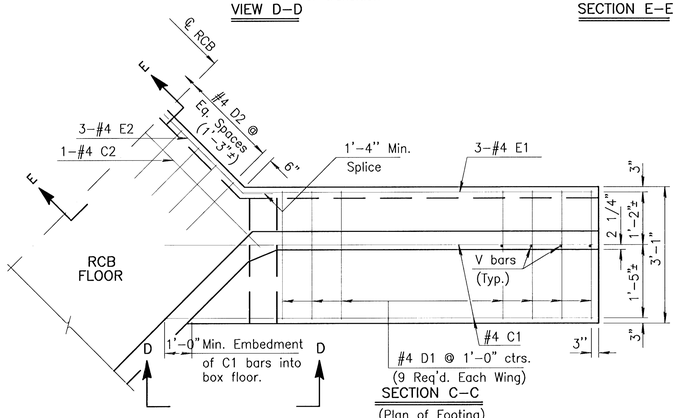

SECTION C-C

(Plan of Footing)

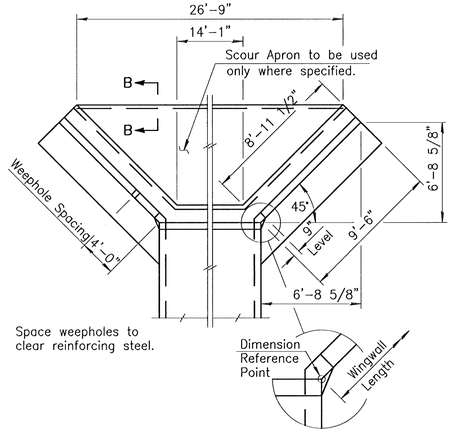

NOTE: Space weepholes to clear reinforcing steel.

WING DIMENSIONS FOR NORMAL BOX

(3 1/2:1 Embankment Slope)

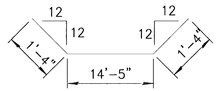

E2

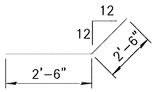

H3

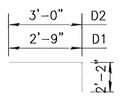

D1,D2

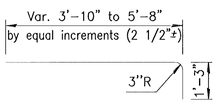

V1

(2 Req'd., each length)

BENDING DIAGRAM

(All dimensions are out to out of bars.)

NOTE: Reinforcing Bar List is for both wings at one end of box only.

* See Bending Diagram

		#4C1	#4D1	#4E1	#4C2	#4D2	#4E2	#4V1	#4H1	#4H2	#4H3	#4H4
0° Skew	No.	4	18 *	6	1	11 *	3 *	20	6	2	16 *	8
	Length	11'-7"	4'-11"	8'-9"	15'-1"	5'-2"	17'-1"	*	8'-4"	10'-3"	5'-0"	3'-6"

WINGWALL QUANTITIES (One End Only)		
Class AAA Concrete:		
Wingwalls	5.26	CY.
Apron	3.03	CY.
Soil Saver	0.00	CY.
Reinforcing Steel	406.92	Lbs.
Welded Wire Fabric	41.26	Lbs.

NO.	DATE	REVISIONS	BY	APP'D

~~KANSAS DEPARTMENT OF TRANSPORTATION~~

Sta. 13+73.67

FLARED WINGWALLS
4 FT. RISE (0° SKEW)

~~BR10.00.04~~ SEDGWICK CO.

FHWA APPROVAL		6-5-91	APP'D	KENNETH F. HURST
DESIGNED	DETAILED		QUANTITIES	TRACED
DESIGN CK.	DETAIL CK.		QUAN.CK.	TRACE CK.

No.	Date	By	Approved	Revision

EQUESTRIAN ESTATES - PHASE 1
STREET IMPROVEMENTS
WINGWALL (4' RISE) DETAILS
CITY OF WICHITA, KANSAS
MICHAEL E. LINDEBAK, P.E. - CITY ENGINEER
C.O.W. Project # 472-83424 O.C.K. # 785705

POE & ASSOCIATES OF KANSAS, INC.
CONSULTING ENGINEERS
3940 E. Central, Suite 200 ■ Wichita, KS 67208-4242
Phone 316/685-4114 ■ FAX 316/685-4444

FINAL

Designed By: J. Ubert / J. Dickmon
Drawn By: J. Dickmon
Poe Job No.: 1694A
Date: March 2002

Sheet
93 of 112

G:\APPS\DCA\P\1694\BASE-ST.dwg Thu Mar 21 14:52:27 2002 Bernard Kulla - POE & ASSOCIATES OF KANSAS INC.