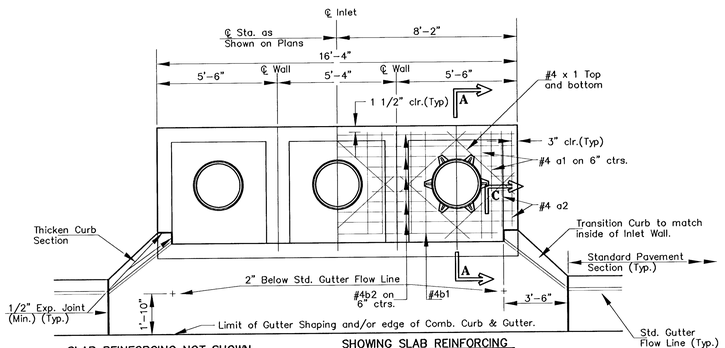

SLAB REINFORCING NOT SHOWN

SHOWING SLAB REINFORCING

C

NOTE: Expansion Joint only in Curb Area with Conc. Pavement.

PLAN

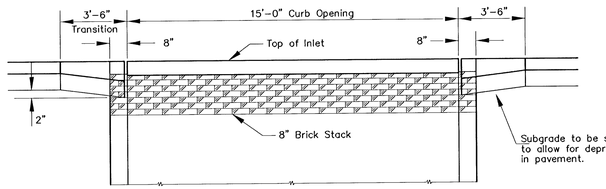

ELEVATION

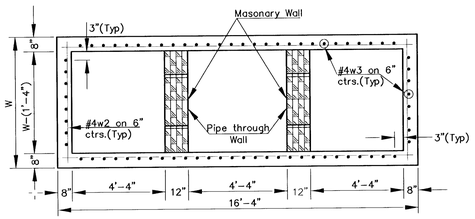

SECTION B-B

PRECAST SLAB AND FLOOR REINFORCING												
		W=4'-4"		W=5'-4"		W=6'-4"		W=7'-4"		W=8'-4"		
Mark	Size	No.	Length	No.	Length	No.	Length	No.	Length	No.	Length	
?a1	#4	20	6'-7"	20	8'-7"	20	10'-7"	20	12'-7"	20	14'-7"	
a2	#4	4	6'-0"	4	8'-0"	4	10'-0"	4	12'-0"	4	14'-0"	
a3	#4	33	4'-1"	33	5'-1"	33	6'-1"	33	7'-1"	33	8'-1"	
b1	#4	1	14'-9"	1	14'-9"	1	14'-9"	1	14'-9"	1	14'-9"	
?b2	#4	23	16'-1"	29	16'-1"	35	16'-1"	41	16'-1"	47	16'-1"	
x1	#4	24	3'-10"	24	4'-2"	24	4'-6"	24	4'-10"	24	5'-2"	
WALL REINFORCING												
		W=4'-4"		W=5'-4"		W=6'-4"		W=7'-4"		W=8'-4"		
Mark	Size	No.	Length	No.	Length	No.	Length	No.	Length	No.	Length	
w1	#4	①	16'-1"	①	16'-1"	①	16'-1"	①	16'-1"	①	16'-1"	
w2	#4	①	4'-1"	①	5'-1"	①	6'-1"	①	7'-1"	①	8'-1"	
w3	#4	72	②	76	②	80	②	84	②	88	②	

? Field bend or cut Reinforcing as required for clearance.
① 4(HI-12"); (HI-12") Round down to nearest 0.5'.
② HI-3"

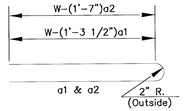

BENDING DIAGRAM

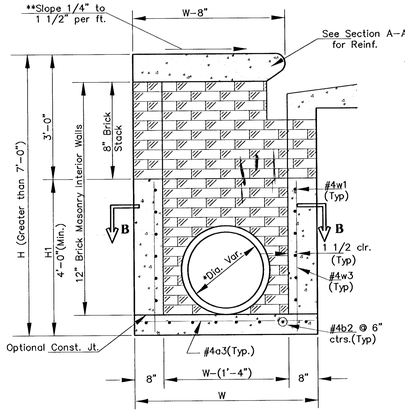

TYPPICAL INLET SECTION AT INTERIOR WALL
(Reinforced Concrete Walls)

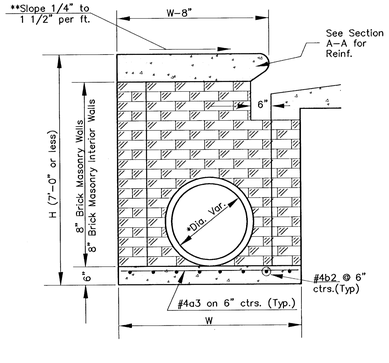

TYPPICAL INLET SECTION AT INTERIOR WALL
(Masonry Walls)

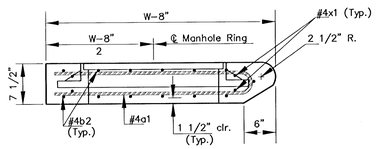

SECTION A-A

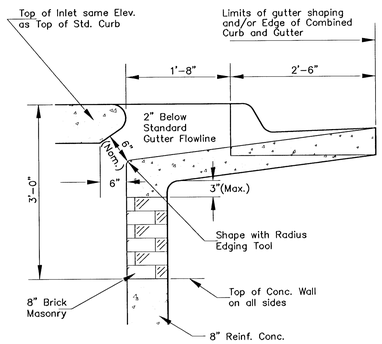

SECTION C-C

* An Interior Wall Opening shall be provided by means of a section of Reinforced Conc. Pipe. See CASE I and CASE II.
** Slope of Inlet Top to match Sidewalk or Parking Slope within the Limits indicated.

GENERAL NOTES

1. THE CONTRACTOR SHALL BE REQUIRED TO CONSTRUCT 8" BRICK MASONRY WALLS BETWEEN THE CONCRETE INLET BASE AND TOP WHEN W = 6'-4" OR LESS AND H = 7'-0" OR LESS. WHEN 'W' IS GREATER THAN 6'-4" AND 'H' IS LESS THAN 7'-0", THE OUTSIDE INLET WALLS BELOW THE BRICK STACK SHALL BE REINFORCED CONCRETE CONSTRUCTION.
2. INLET INVERT SHALL BE SHAPED WITH 8 SACK SAND MIX CONCRETE TO CREATE FLOW CHANNELS AND TO INCREASE HYDRAULIC EFFICIENCY SUCH THAT THE THE INLET WILL BE SELF CLEANING BETWEEN ALL INLET AND/OR OUTLET PIPES.
3. CONCRETE SHALL BE C.O.W. STANDARD PAVING MIX. ALL EXPOSED EDGES SHALL BE FINISHED WITH AN EDGING TOOL. REINFORCING BARS SHALL BE FIELD BENT OR CUT TO CLEAR PIPES AND INLET RING. ALL BARS ARE #4 BARS AT 6" SPACING AND SHALL HAVE A MINIMUM CLEARENCE OF 1 1/2" UNLESS OTHERWISE NOTED.
4. CONCRETE TOPS TO BE INSTALLED ON THIN MORTAR CUSHION TO INSURE FULL SUPPORT ALONG BRICK WALLS. CONCRETE TOPS MAY BE CAST IN PLACE OR PRECAST.
5. THE ENDS OF ALL PIPES INSTALLED IN INLETS SHALL BE CUT OFF FLUSH WITH THE INSIDE FACE OF THE INLET WALL.

STANDARD CURB INLET PRECAST TOPS			
W	PRE-CAST TOP SIZE	SIDE OR INTERIOR WALL PIPE SIZE	CU. YD. CONC.
4'-4"	3'-8"x16'-4"x7-1/2"	21" & Smaller	1.20±
5'-4"	4'-8"x16'-4"x7-1/2"	24" & 30"	1.58±
6'-4"	5'-8"x16'-4"x7-1/2"	36" & 42"	1.95±
7'-4"	6'-8"x16'-4"x7-1/2"	48" & 54"	2.33±
8'-4"	7'-8"x16'-4"x7-1/2"	60" & 66"	2.70±

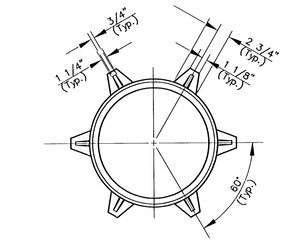

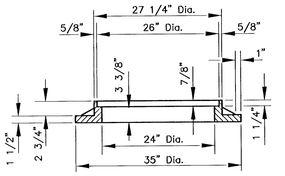

CAST IRON MANHOLE RING
Wt. 180 Lbs.

See City of Wichita Standard Manhole Frame and Cover Detail Sheet for Cover Details to be used with Inlet Frame.

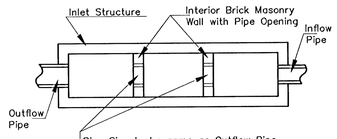

CASE I

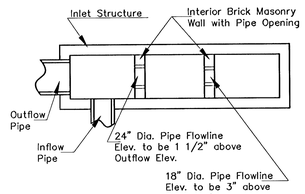

CASE II

NOTE: Interior Wall Pipe Size shall be as specified in the Inlet Construction Note on the Plan/Profile Sheets for those Cases not shown here.

THE CITY OF WICHITA

CITY ENGINEER'S OFFICE
CITY HALL - SEVENTH FLOOR
455 NORTH MAIN STREET
WICHITA, KANSAS 67202
(316) 268-4501
(316) 268-4114 FAX

STANDARD TYPE 1A CURB INLET INLET OPENING 6" x 15'-0"

M. E. LINDEBAK P.E. – CITY ENGINEER

PROJECT NUMBER	INDEX CODE
472-83424	765705
DATE: MAR '96	SHEET 97 OF 112

No.	Date	By	Approved	Revision

EQUESTRIAN ESTATES - PHASE 1
STREET IMPROVEMENTS
TYPE 1-A INLET 15'-0"
CITY OF WICHITA, KANSAS
MICHAEL E. LINDEBAK, P.E. – CITY ENGINEER
C.O.W. Project # 472-83424 O.C.K. # 765705

POE & ASSOCIATES OF KANSAS, INC.
CONSULTING ENGINEERS
5940 E. Central, Suite 200 ■ Wichita, KS 67208-4242
Phone 316/685-4114 ■ FAX 316/685-4444

FINAL

Designed By: J. Ubert / J. Dickman
Drawn By: J. Dickman
Poe Job No.: 1694A
Date: March 2002

Sheet 97 of 112

G:\APPS\DCA\P\1694\BASE-ST.dwg Thu Mar 21 14:34:37 2002 Bernard Kulla - POE & ASSOCIATES OF KANSAS INC.

Xref: 1694-ST