

DEETER #2433 GRATE

NOTE: Grates shall be imprinted on the top surface with "CITY OF WICHITA" using letters at least 1" in height. Other marking methods may be approved by the engineer.

24" x 24" Frame and Grate Detail

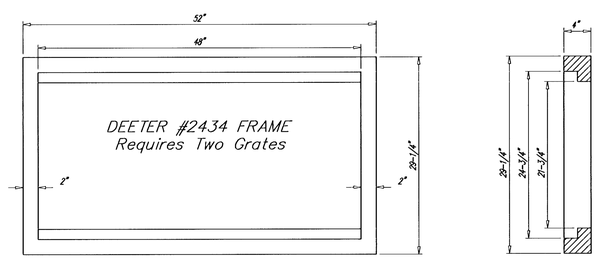

Double 24" x 24" Frame Detail

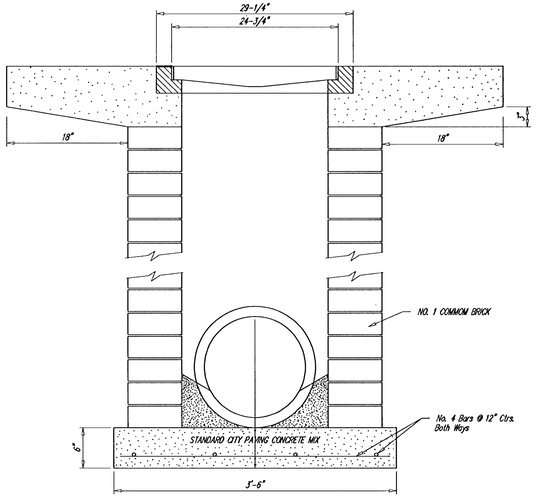

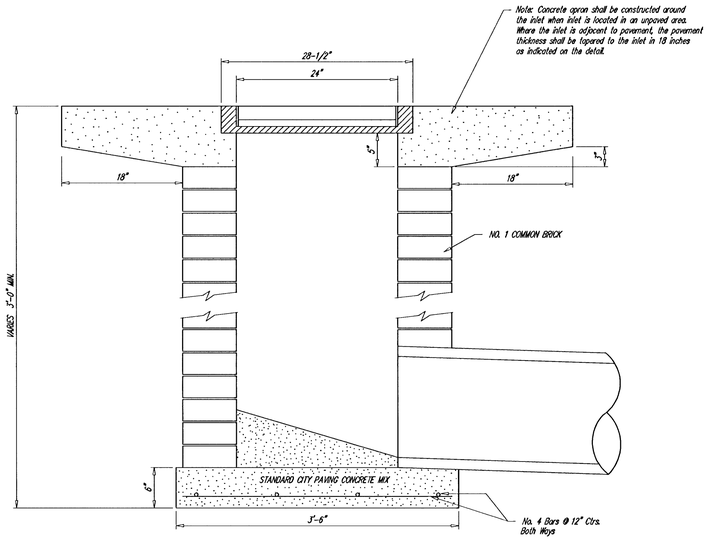

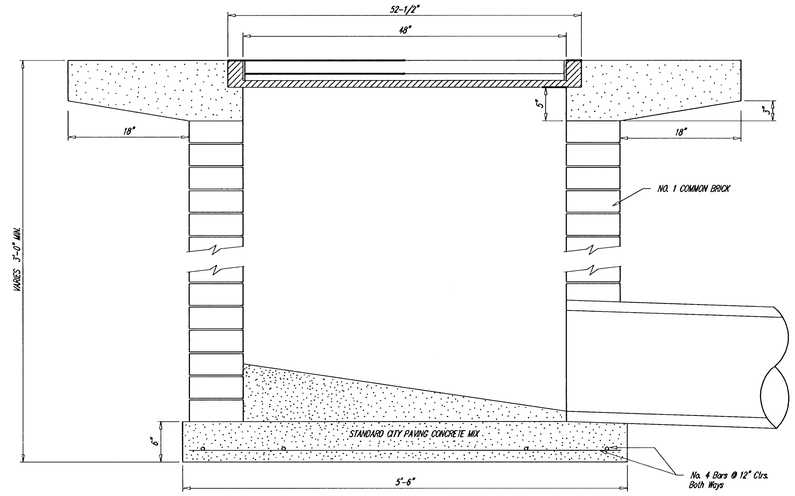

No.	Date	By	Approved	Revision

THE LOCHS AT ABERDEEN
STREET IMPROVEMENTS
DROP INLET DETAILS
CITY OF WICHITA, KANSAS
MICHAEL E. LINDEBAK, P.E. - CITY ENGINEER
Proj.# 472-83359 O.C.A.# 765681

POE & ASSOCIATES OF KANSAS, INC.
CONSULTING ENGINEERS
5940 E. Central, Suite 200 ■ Wichita, KS 67208-4242
Phone 316/685-4114 ■ FAX 316/685-4444

FINAL

Engineer: J. Ubert
Drawn By: B. Kulla
Poe Job No.: 1656B
Date: May 2001

Sheet
21 of 58

G:\APPS\DCA\P\656b\base.dwg Fri Jun 15 15:43:12 2001 Bernard Kulla - POE & ASSOCIATES OF KANSAS INC.