SCALE: 3/8 " = 1'-0"

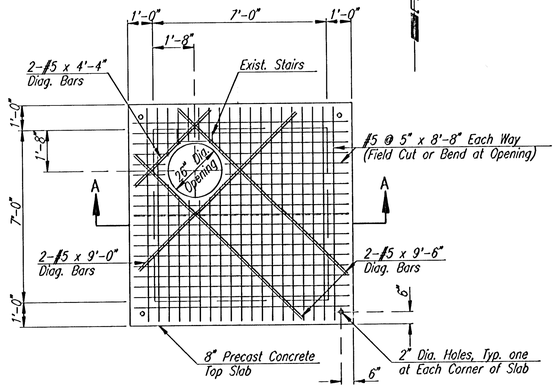

PLAN

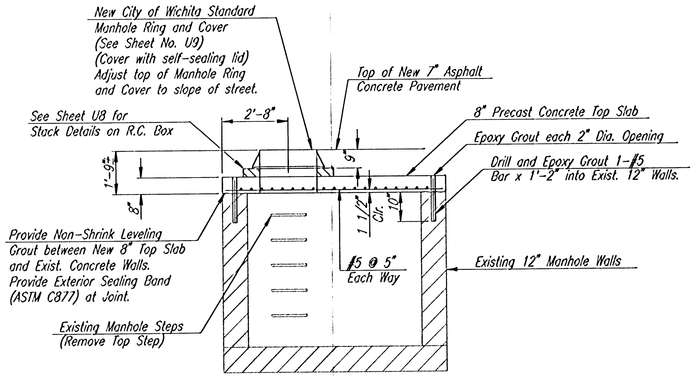

SECTION A-A

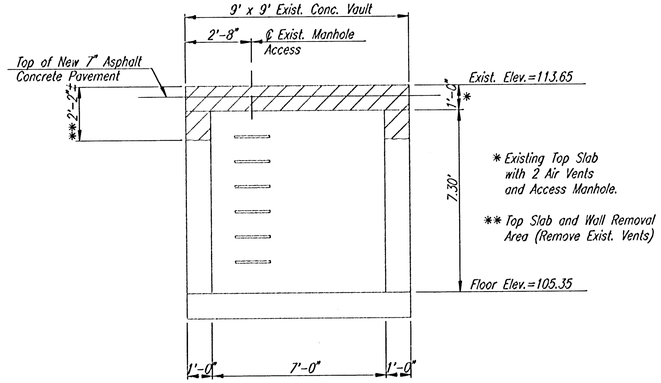

TYP. SECTION EXISTING CONCRETE VAULT
(Baseline East Bound Sta. 57+80.00, 18' Rt.)

CONCRETE MANHOLE MODIFICATION NOTES

CONCRETE: BEVEL ALL EXPOSED EDGES WITH A 3/4 " TRIANGULAR MOLDING OR FINISH WITH AN APPROVED EDGING TOOL. CONCRETE SHALL BE AS PER CITY OF WICHITA STANDARD SPECIFICATIONS FOR CONCRETE PAVING MIX EXCEPT THAT IT SHALL HAVE A MINIMUM 28 DAYS COMPRESSIVE STRENGTH OF 4,000 P.S.I.

REINFORCING STEEL: ALL DIMENSIONS RELATIVE TO REINFORCING STEEL ARE TO CENTERLINE OF BAR UNLESS OTHERWISE NOTED. ALL CLEARANCES SHALL BE 1 1/2 " UNLESS OTHERWISE NOTED. ALL REINFORCING STEEL SHALL CONFORM TO A.S.T.M. DESIGNATION A615 GRADE 60 AND SHALL BE EPOXY COATED.

PAYMENT: THE "R.C. MANHOLE MODIFICATION" SHALL BE PAID FOR AT THE UNIT PRICE BID IN PLACE INCLUDING CONCRETE, REINFORCING STEEL, EXCAVATION AND ALL OTHER MISCELLANEOUS MATERIAL, LABOR, TOOLS, EQUIPMENT AND INCIDENTIALS NECESSARY TO COMPLETE THE WORK.

Notes:

1. Relocate 110V Junction Box that provides power to Existing Sump and Light.
2. Relocate Exist. Sump Pipe so that it Discharges North to R.C. Manhole, Sta. 0+62.6 Line No. 2.

REV.	DATE	DESCRIPTION

HELLMUTH, OBATA & KASSEBAUM, INC.
DALLAS, TEXAS

PROFESSIONAL ENGINEERING CONSULTANTS, P.A.
WICHITA, KANSAS

BRAD J. GOLDBERG
DALLAS, TEXAS

MUSEUM DISTRICT ROADWAY AND PEDESTRIAN IMPROVEMENTS
WICHITA, KANSAS

REINF. CONC. MANHOLE MODIFICATION
STA. 57+80.00

PROJECT NO. 99773

SHEET U14

PLAN | NOTE BOOK NO. | SURVEYED | PLOTTED | ALIGNMENT CHECKED | RT. OF WAY CHECKED | BY | DATE

DSNR: BER OPER: DEP SCALE: 1=4.00
Q:\1999\99773\000\revault 06-01-2001 03:09:47 pm