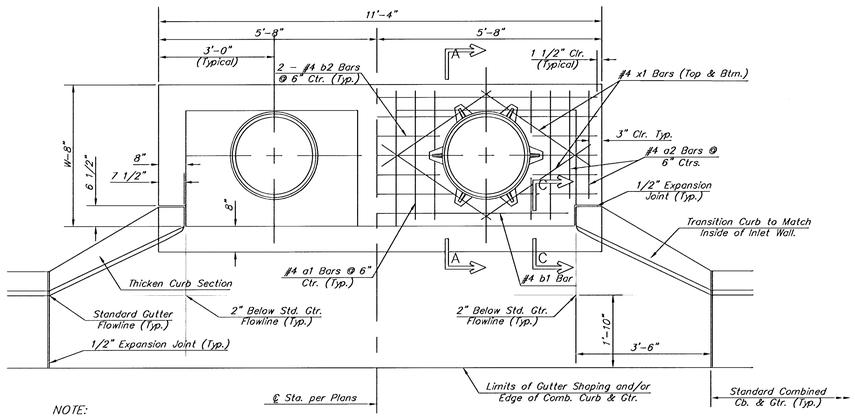

NOTE:
Expansion Joint Only in Curb Area with Concrete Pavement.

PLAN

*Left Side Shown Without Slab Reinforcing, Right Side Shown With Slab Reinforcing

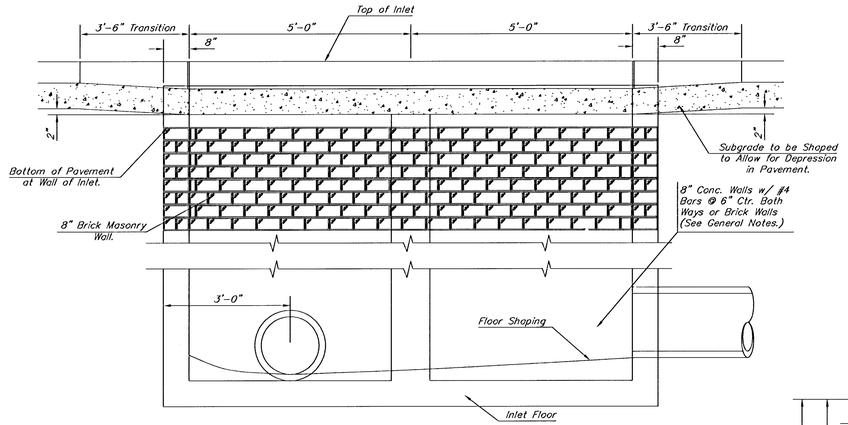

ELEVATION

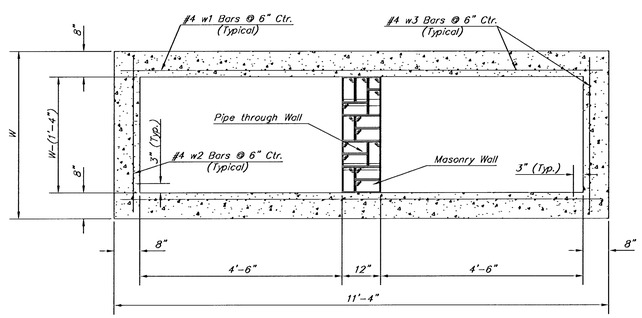

SECTION B-B

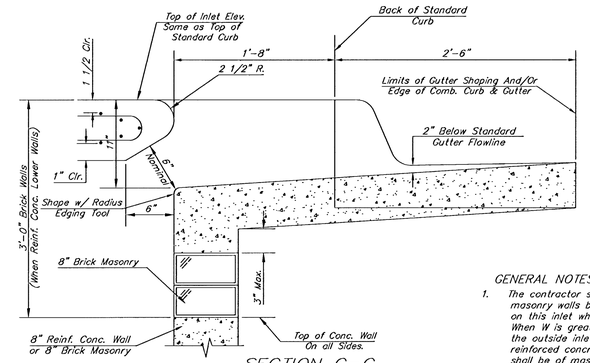

SECTION C-C

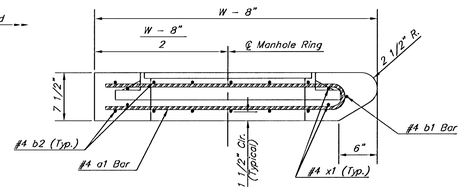

SECTION A-A

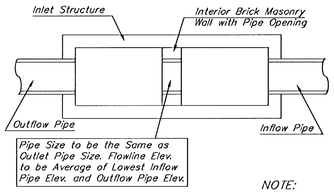

CASE I

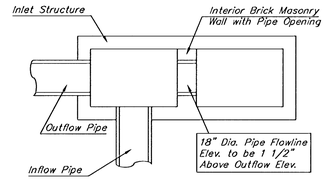

CASE II

NOTE:
Center Wall Pipe Size shall be as Specified in Inlet Construction Notes on the Plan/Profile Sheets for those Cases not Shown Here.

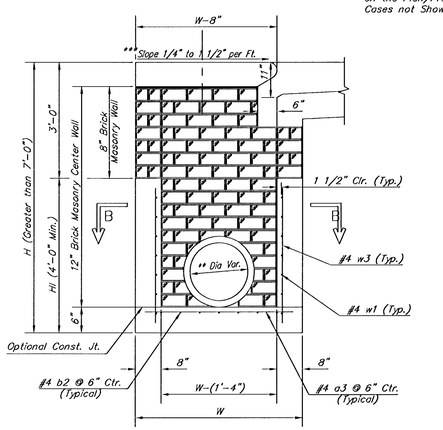

TYPICAL INLET SECTION AT CENTER WALL
(Reinforced Concrete Walls)

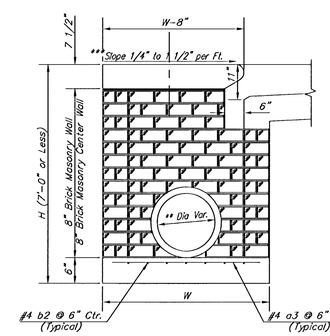

TYPICAL INLET SECTION AT CENTER WALL
(Masonry Walls)

NOTES:
** A center wall opening shall be provided by means of a section of reinforced concrete pipe. See Case I and Case II above.
*** Slope of inlet tops to match sidewalk of parking slopes within limits indicated

PRECAST SLAB AND FLOOR REINFORCING										
		W = 4'-4"		W = 5'-4"		W = 6'-4"		W = 7'-4"		W = 8'-4"	
MARK	SIZE	NO.	LENGTH	NO.	LENGTH	NO.	LENGTH	NO.	LENGTH	NO.	LENGTH
* a1	#4	13	6'-7"	13	8'-7"	13	10'-7"	13	12'-7"	13	14'-7"
a2	#4	4	6'-0"	4	8'-0"	4	10'-0"	4	12'-0"	4	14'-0"
a3	#4	23	4'-1"	23	5'-1"	23	6'-1"	23	7'-1	23	8'-1"
b1	#4	1	9'-9"	1	9'-9"	1	9'-9"	1	9'-9"	1	9'-9"
* b2	#4	23	11'-1"	29	11'-1"	35	11'-1"	41	11'-1"	47	11'-1"
x1	#4	16	3'-10"	16	4'-2"	16	4'-6"	16	4'-10"	16	5'-2"
WALL REINFORCING											
		W = 4'-4"		W = 5'-4"		W = 6'-4"		W = 7'-4"		W = 8'-4"	
MARK	SIZE	NO.	LENGTH	NO.	LENGTH	NO.	LENGTH	NO.	LENGTH	NO.	LENGTH
w1	#4	①	11'-1"	①	11'-1"	①	11'-1"	①	11'-1"	①	11'-1"
w2	#4	①	4'-1"	①	5'-1"	①	6'-1"	①	7'-1"	①	8'-1"
w3	#4	52	②	56	②	60	②	64	②	68	②

* Field Bend or Cut Reinforcing as Required for Clearance.
① 4 (H - 12") (H - 21") Rounded down to nearest 0.5'
② H - 3"

GENERAL NOTES:
1. The contractor shall be required to construct 8" brick masonry walls between the concrete inlet base and top on this inlet when W=6'-4" or less and H=7'-0" or less. When W is greater than 6'-4" and H is less than 7'-0" the outside inlet walls below the brick stack shall be reinforced concrete construction and the center wall shall be of masonry construction as shown for the masonry wall option.
2. Inlet invert shall be shaped with 8 sack sand mix concrete to create flow channels and to increase hydraulic efficiency such that the inlet will be self cleaning between all inlet and/or outlet pipes.
3. Concrete tops to be installed on thin mortar cushion to insure full support along brick walls. Concrete tops may be cast in place or precast. Concrete used for inlet construction shall be concrete pavement mix.
4. Inlet top reinforcing shall be spaced on 6" max. centers. Inlet lids shall be notched out as indicated to facilitate construction of curb. Bars in inlet top to be field bent or cut to clear manhole ring.
5. The ends of all pipes installed in inlets shall be cut off flush with the inside face of the inlet wall.

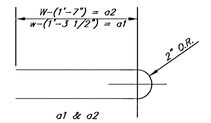

BENDING DIAGRAM

STANDARD CURB INLET PRECAST TOPS			
W	PRE-CAST TOP SIZE	PIPE SIZE	CU. YD. CONC.
4'-4"	3'-8" 11'-4" 7 1/2"	21" & SMALLER	0.83±
5'-4"	4'-8" 11'-4" 7 1/2"	24" & 30"	1.09±
6'-4"	5'-8" 11'-4" 7 1/2"	36" & 42"	1.35±
7'-4"	6'-8" 11'-4" 7 1/2"	48" & 54"	1.61±
8'-4"	7'-8" 11'-4" 7 1/2"	60" & 66"	1.87±

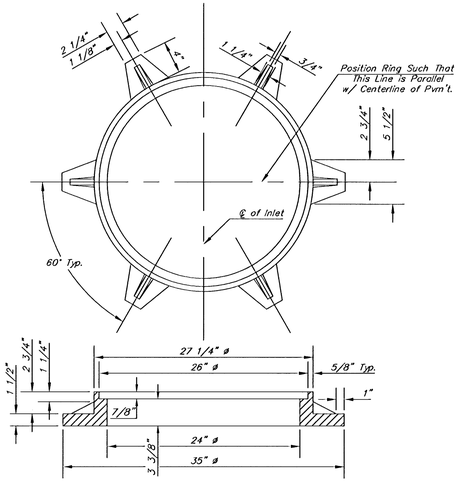

MANHOLE RING AND COVER
Weight = 180 lbs.

*See City of Wichita Standard Manhole Ring and Cover Detail Sheet for Cover Details to Be Used With Inlet Frame.

THE CITY OF WICHITA

CITY ENGINEER'S OFFICE
CITY HALL - SEVENTH FLOOR
455 NORTH MAIN STREET
WICHITA, KANSAS 67202
(316) 268-4501
(316) 268-4114 FAX

STANDARD TYPE 1-A CURB INLET OPENING = 6" x 10'-0"

M. E. LINDEBAK P.E. - CITY ENGINEER

PROJECT NUMBER	OCA NUMBER
472-83498	765724
DATE: JANUARY 02	SHEET 12 OF 24

TYP1A-D.DWG