Notes For All Services - 2" thru 12":

1. When the standard vault dimensions are not applicable, such as when additional space is required for special pipe, fittings, additional meters, etc. the design engineer shall design a vault with the required dimensions for Water & Sewer Dept. approval and Public Works approval.

2. The vault shall be poured concrete, cement blocks (voids to be completely filled with 2500 P.S.I. concrete), or approved precast structure (such as Clutter Inc. vaults approved 8/1/2000). The intent of these details shall not be limited by drawings or standards of precast structures.

3. Vault location to be determined by Wichita Water & Sewer prior to construction and approved by Department's field supervisor prior to installation. A final inspection will be required for acceptance. Vault location standards include but not limited to: not to be located where subjected to vehicular loads, not to be located in any right-of-way or utility easement, and must be located on the property being served.

4. The manhole ring and lid shall be Neenah R-6034 Frame with Type "C" Solid Lid and Drop Down Handle or US Foundry APS-30x30 (Aluminum). Where applicable the standard 10" Wichita Water & Sewer pattern meter reading lid and ring shall be located directly above water meter register. All meter registers shall have an approved lid directly vertical above. All joints of concrete to concrete or metal to concrete in the construction of the vault shall have an appoved water tight mastic joint seal.

5. Any fittings or appurtenances required to achieve proper elevation of pipe through the vault shall be provided by the contractor and appropriately noted on as-builts submitted by the inspecting engineer. Such fittings shall be a minimum of 2' from the exterior wall of vault.

6. For all services larger than 2" the contractor shall provide an outlet flange connection as shown 12-inches from the inside wall. Inlet and outlet wall sleeves shall be provided and installed by the contractor and shall be in alignment with one another. The inlet and outlet pipe shall be ductile iron pipe, cement lined, Class 150 per Standard Specifications and shall be continuous through vault wall and joint no less than two(2) feet from the exterior wall of vault. Flanges of inlet and outlet pipes shall be in proper alignment and bolt pattern shall be rotated in such a way that valves and other fittings shall be in their proper vertical alignment when installed.

7. For all services 4" and larger the contractor shall install a mega lug, restrained joint, or approved equal on the exterior walls of the vault, which shall be manufactured of ductile iron conforming to ASTM A 536-80, heat treated to a minimum hardness of 370 BHN and have a working pressure of at least 250 P.S.I. For all services smaller than 4" the contractor shall install an approved vault clamp on the exterior walls of the vault.

8. All valves, meters, assemblies, and fittings shall be provided with sufficient concrete or other approved supports to the vault floor.

9. The "Confined Space Warning" sign shall be fastened to the top of all vaults. If necessary for lanscaping or site considerations, the sign may be fastened to the vault lid if it does not impede access to the handle. Acceptable materials: Aluminum 73415HH, Plastic 73439HH, or S.A. Vinyl 73463HH.

10. All meters shall have an electronic read register compatible with the current City of Wichita meter reading system. All detector meters shall be an 5/8 cubic foot Badger meter with ERT register or approved equal. Gallon meters shall not be accepted.

11. Additional Notes For Fire Services:
    A. A post indicator valve (PIV) is an option for the outlet valve and may be requested by the architect or owner. The PIV is not required by City of Wichita ordinance.
    B. When Siamese connections are required by the Wichita Fire Department, refer to the current City Code Section 15.
    C. If due to any reason the completed vault retains ground or drainage water in excess of 4" in depth from the floor of the vault, tha property owner shall be responsible for providing and installing an appropriate automatic sump pump or approved equal, as well as any other appurtenances required to make such system function as intended.
    D. The property owner is responsible for completing an "Application for Private Fire Protection" prior to final acceptance of the project.

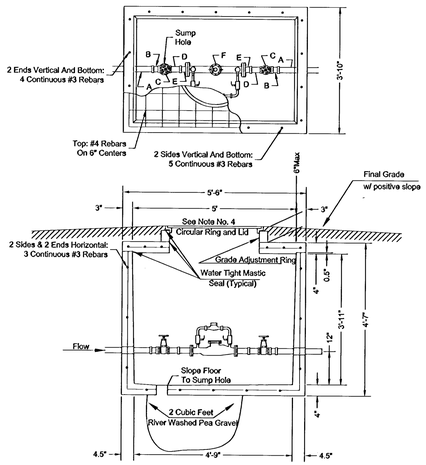

A - 2" PVC or Copper
B - 2" F PVC to M Iron or 2" F Copper to M Iron
C - 2" Bronze IPT Gate Valve, Wheel Operated
D - 2" x 4" or 2" x 6" Brass Nipple
E - Lok-Pak Meter Couplings
F - 2" Fisboo Model 408 Detector Check or approved equal with metered bypass assembly

2" Fire Service

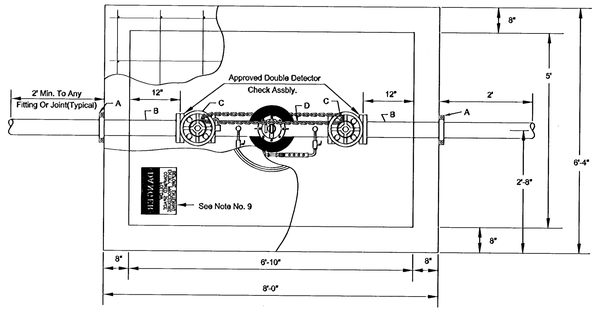

A - Mega Lug (See Note 7)
B - Min. 3'-8" Piece of FL x PE DICL Pipe
C - Flange Gate Valve, Wheel Operated
D - Ames Model 3001SS or approved equal with metered(cubic foot) by-pass assembly

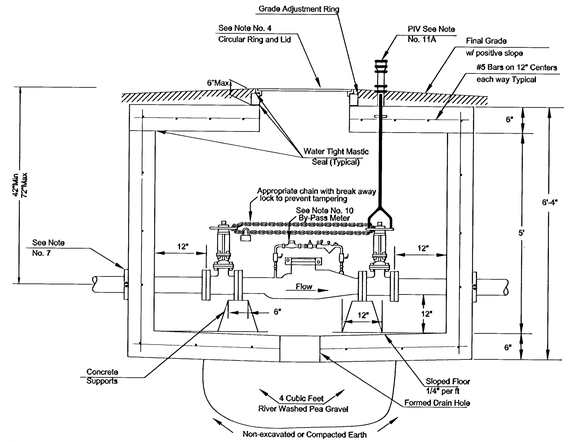

4" thru 8" Fire Service

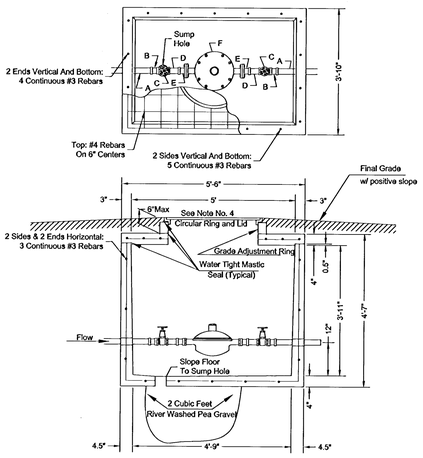

A - 2" PVC or Copper (to be extended completely through vault to ensure proper alignment)*
B - 2" F PVC to M Iron or 2" F Copper to M Iron**
C - 2" Bronze IPT Gate Valve, Wheel Operated**
D - 2" x 4" or 2" x 6" Brass Nipple**
E - Lok-Pak Meter Couplings**
F - 2" Meter**

* = Contractor Installed
** = Installed By Wichita Water & Sewer

2"DS

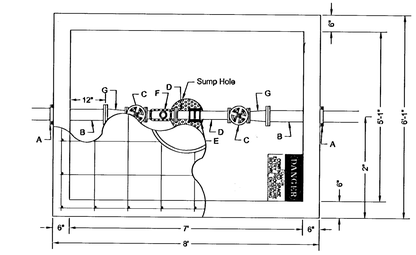

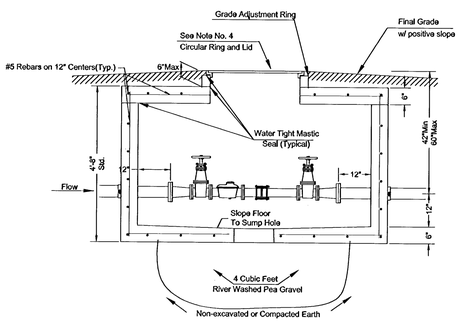

A - 4" Vault Clamp
B - Min. 3' Piece of 4" FL x PE DICL Pipe
C - 3" Flange Non-rising Stem Gate Wheel Valve
D - 3" FL x PE Pipe
E - 3" Flex Coupling
F - 3" Badger Recordall II Turbo Cubic Foot Meter with ERT Register or Sensus W-350DR Cubic Foot Meter with AMR Register.
G - 3" x 4" FL Reducer

3"DS

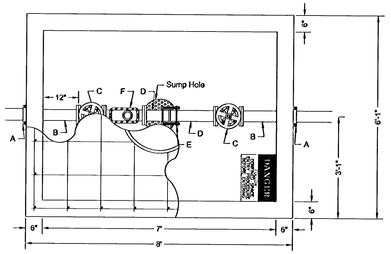

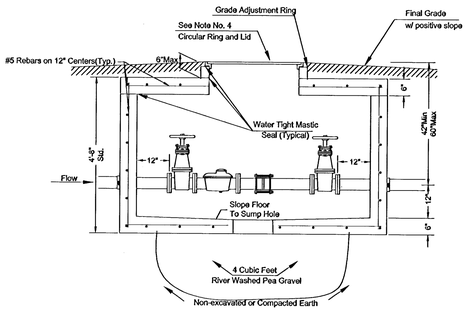

A - 4" Vault Clamp
B - Min. 3' Piece of 4" FL x PE DICL Pipe
C - 4" Flange Non-rising Stem Gate Wheel Valve
D - 4" FL x PE Pipe
E - 4" Flex Coupling
F - 4" Badger Recordall II Turbo Cubic Foot Meter with ERT Register or Sensus W-1000DR Cubic Foot Meter with AMR Register.

4"DS

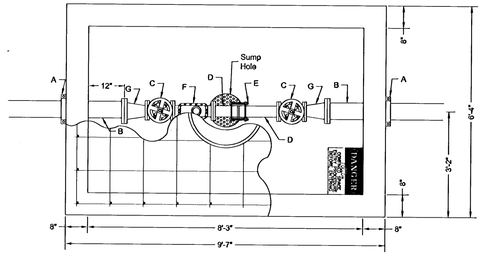

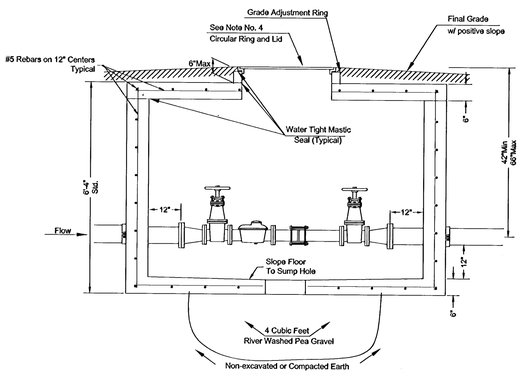

A - 6" Mega Lug (See Note 7)
B - Min. 3' Piece of 6" FL x PE DICL Pipe
C - 4" Flange Non-rising Stem Gate Wheel Valve
D - 4" FL x PE Pipe
E - 4" Flex Coupling
F - 4" Badger Recordall II Turbo Cubic Foot Meter with ERT Register or Sensus W-1000DR Cubic Foot Meter with AMR Register.
G - 6" x 4" Flange Reducer

6" DS w/ 4" meter

THE CITY OF WICHITA
WATER & SEWER DEPT.
CITY HALL - 8 EIGHTH FLOOR
455 NORTH MAIN STREET
WICHITA, KANSAS 67202
(316) 268-4518 FAX

STANDARD VAULT DETAILS AND METER ASSEMBLIES

D. R. WARREN - DIRECTOR

PROJECT NUMBER	INDEX CODE
XXX-XXXXX	XXXXXX
DATE	SHEET 3 OF 3
JULY 2000	

G:\CIVIL\00031\DWG\WTR\PVT-WTR\00031CD1.DWG

14-11-03-03

G:\CIVIL\00031\DWG\WTR\PVT-WTR\00031CD1.DWG Wed Mar 06 20:56:39 2002