PROJECT NO.	SHEET NO.	TOTAL SHEETS
472-83468	22	55

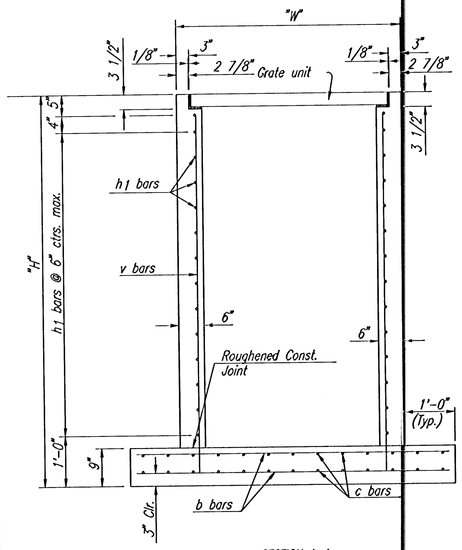

SECTION A-A

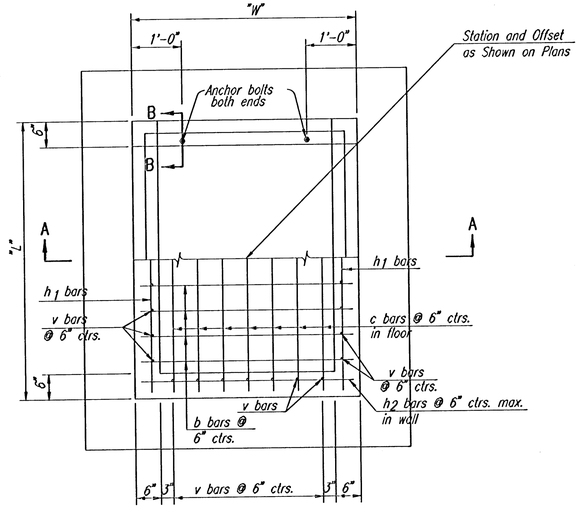

PLAN/SECTION

AREA INLET

See Plan Sheet for Inlet orientation.

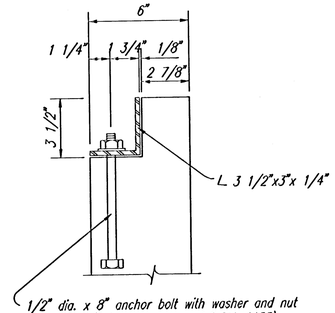

SECTION B-B

Note: Anchor bolts are subsidiary to the bid item "Inlet Type C".

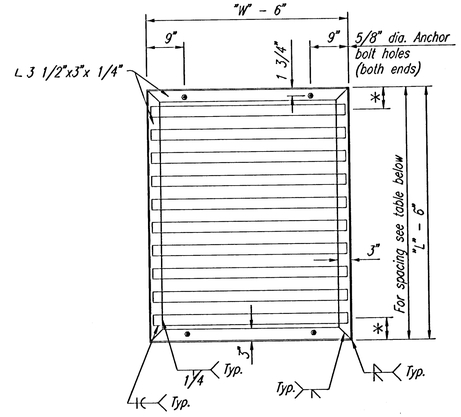

GRATE UNIT DETAILS

BILL OF MATERIALS			
"L" 4'-0"	"W" x 4'-0"	"H" x 5'-0"	(130)
Bar	No.	Size	Length
v	24	#4	4'-4"
c	24	#4	5'-9"
b	24	#4	5'-9"
h1	18	#4	3'-9"
h2	18	#4	3'-9"
Class "A" Conc.		2.4	Cu.Yd.
Reinf. steel		---	Lbs.
Struct. steel		---	Lbs.

Quantities are for information only.

PIPE DIMENSIONS AND SPACING				
Location	L x W	No. of Pipes	Dia. x Length x Spacing	*
(130)	4'-0"x4'-0"	7	2 1/2 ϕ x 3'-5 1/4" pipes @ 5 1/2" ctrs.	4 1/2"

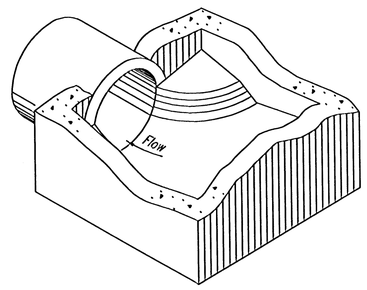

Floor of inlet or manhole shall be shaped as shown to increase hydraulic efficiency.

ISOMETRIC VIEW

GENERAL NOTES

Concrete shall be as per City of Wichita Standard Specifications for Concrete Paving Mix. Except that it shall have a minimum 28 day compressive strength of 4,000 p.s.i. All Pipes shall be flush cut prior to being cast into the Inlet.

All dimensions relative to Reinforcing Steel are to centerline of bar unless otherwise noted. All Reinforcing Steel shall conform to A.S.T.M. Designation A615 Grade 60 and shall be Epoxy Coated.

All exposed edges shall be finished with an edging tool.

All external pipe to inlet joints shall be coated with an asphaltic tar to waterproof the joint interface.

Where possible bend bars around pipes.

Floor of inlet shall be shaped as shown. Concrete used for shaping shall be unreinforced concrete pavement mix. No addition in concrete quantities shall be made for shaping floor of inlet.

No deductions in concrete quantities shall be made for pipe openings.

All bars are #4 @ 6" spacing and shall have a minimum clearance of 1 1/2 " unless otherwise noted on the plans.

The top of the inlet shall be set level.

The grate shall be fabricated from standard or commercial grade structural steel and black steel pipe. The unit shall be hot dipped, galvanized after fabrication, in accordance with ASTM A123 except the weight of coating shall average not less than 2.0 ounces per square foot of actual surface and no individual test shall show less than 1.8 ounces of coating per square foot of actual surface area.

Note: Inlet modified from KDOT Std. No. 648

BALTHROP 4TH ADDITION

TYPE C INLET DETAILS

Professional Engineering Consultants, P.A.
303 S. TOPEKA • WICHITA, KANSAS 67202
316-262-2691 • FAX 316-262-3003

Designed by	BER	Checked by	
Drawn by	DEP	Date FEB. 2002	Job No. 01545

DSNR: DEP OPER: SAD SCALE: 1=1.00
Q:\2001\01545\000\TYPECINLET 03-13-2002 03:57:52 pm