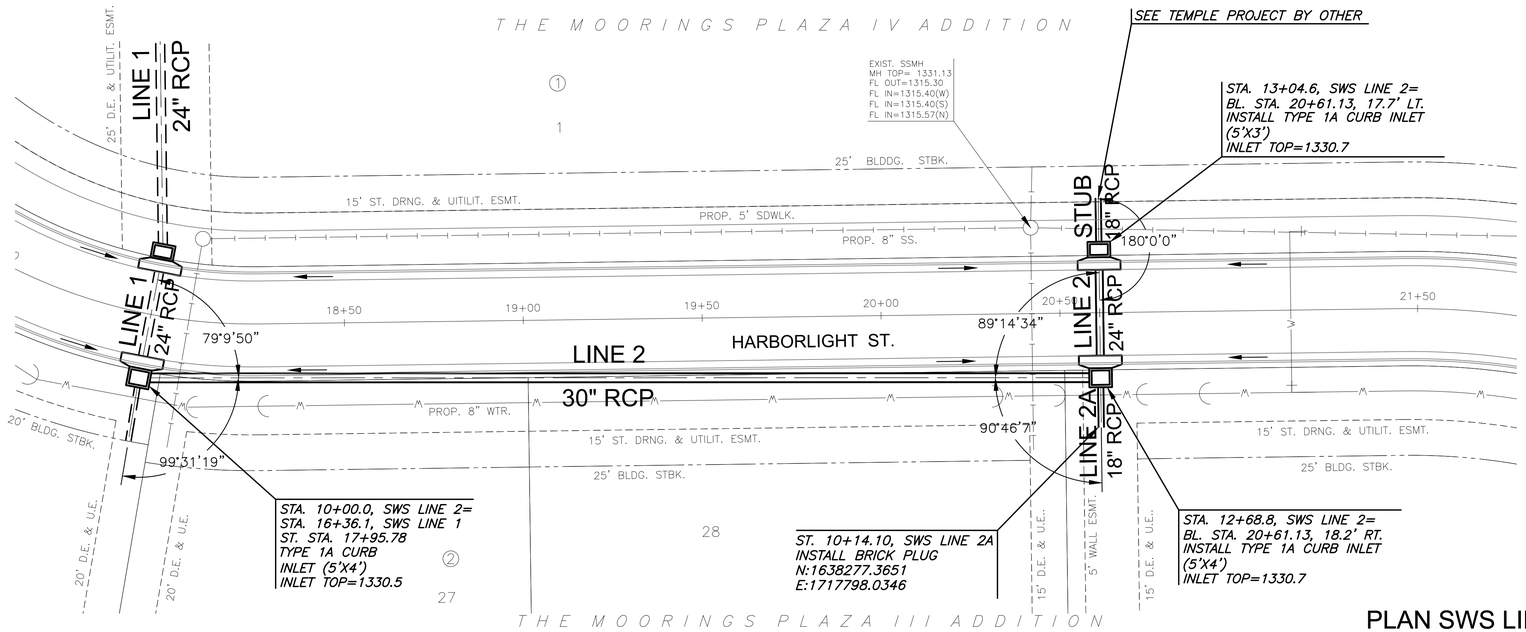

NOTE:
CONTRACTOR TO VERIFY THE DEPTH AND LOCATION OF EXISTING UTILITIES PRIOR TO CONSTRUCTION.

PLAN SWS LINE 2
PROFILE SWS LINE 2

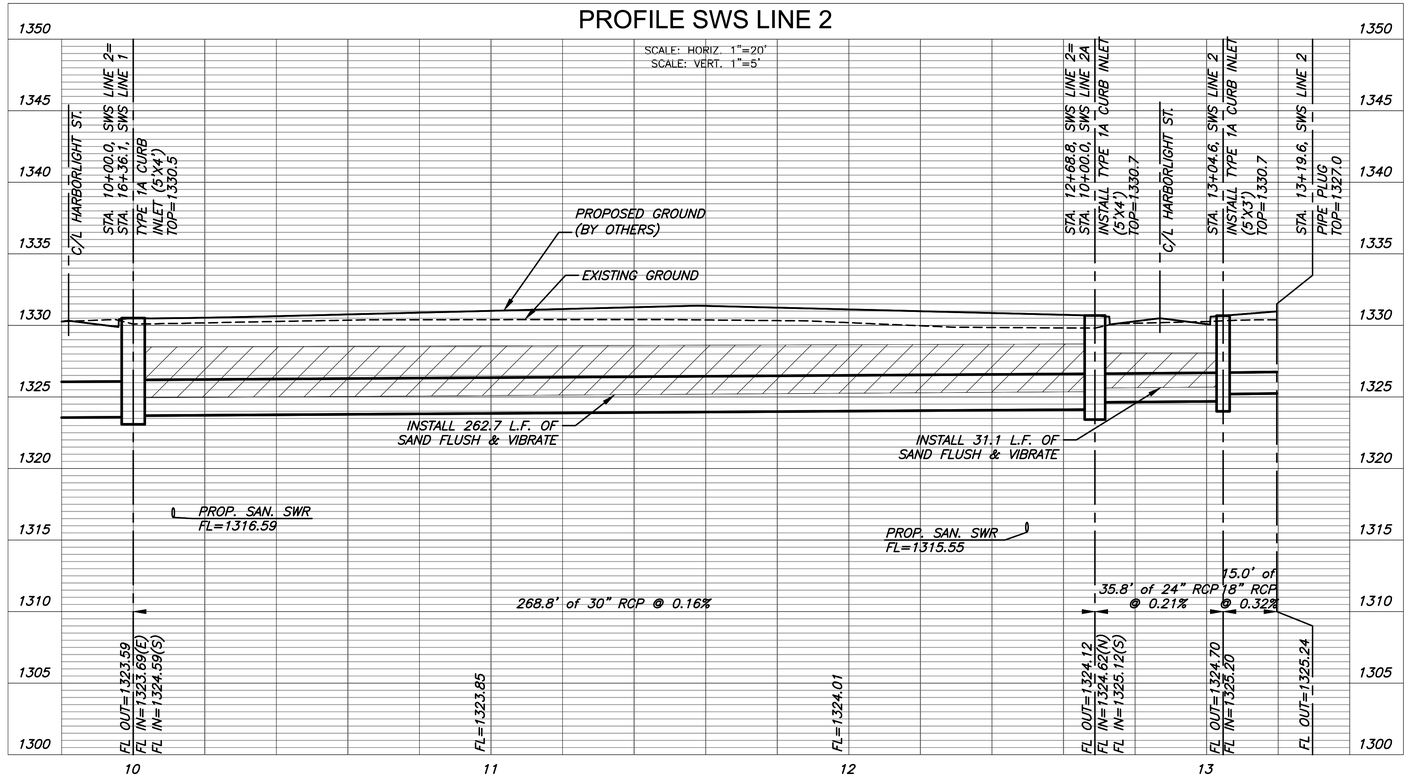

PLAN SWS LINE 2A
PROFILE SWS LINE 2A

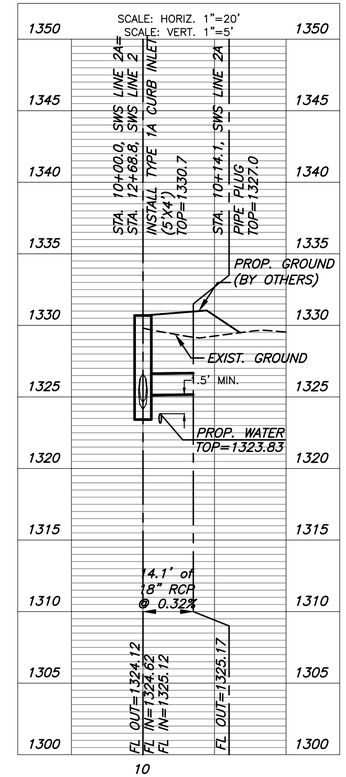

MKEC
Wichita, KS • 316.684.9600

STORM WATER SEWER
THE MOORINGS PLAZA FOURTH ADDITION
PHASE 1

SWS LINE 2

PROJECT NO.	
458-2023-085539	
SCALE	
1"=20'	
DRAWN	DESIGNED	CHECKED
BWS	DFL	SPE

NO.	REVISION	DATE
0	FOR CONSTRUCTION	04/01/24

SHEET NO.
8 OF 16

©2024 MKEC ENGINEERING, INC. ALL RIGHTS RESERVED WWW.MKEC.COM. THESE DRAWINGS AND THEIR CONTENTS, INCLUDING, BUT NOT LIMITED TO, ALL CONCEPTS, DESIGNS, & IDEAS ARE THE EXCLUSIVE PROPERTY OF MKEC ENGINEERING, INC. (MKEC), AND MAY NOT BE USED OR REPRODUCED IN ANY WAY WITHOUT THE EXPRESS CONSENT OF MKEC.

J:\PROJECTS\2022\22010189\2_THE MOORINGS PLAZA FOURTH ADDITION\00 22892 CAD\SHTS\05 CIVIL\SWS\PH 1\22010189 2-05-4-2002 PH1.DWG

PLOTTED: Monday, April 01, 2024 @ 03:13PM