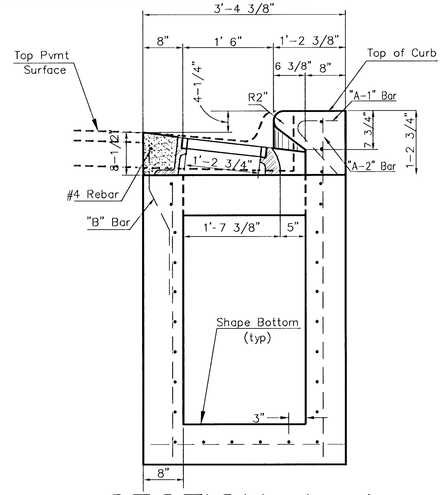

SECTION A–A

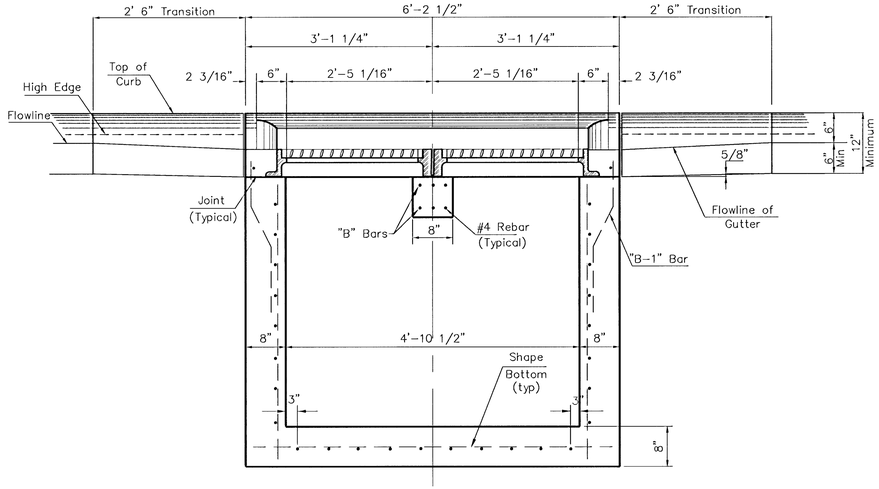

SECTION C–C

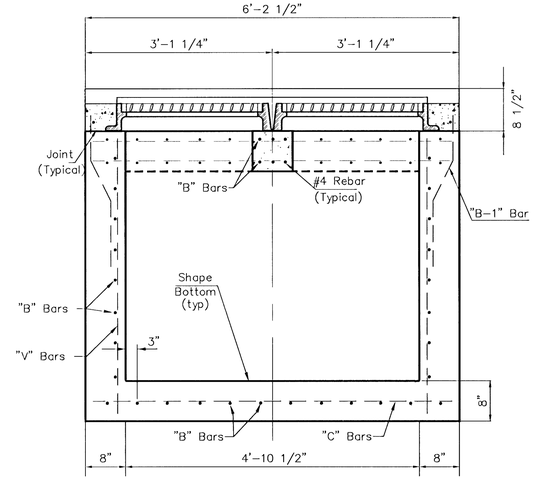

SECTION D–D

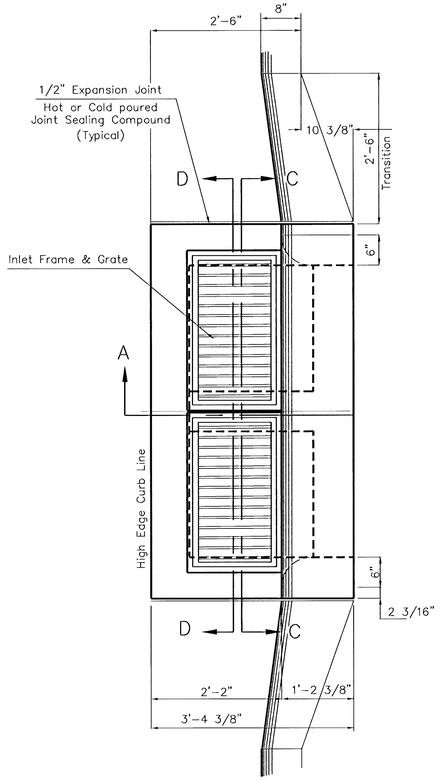

PLAN VIEW

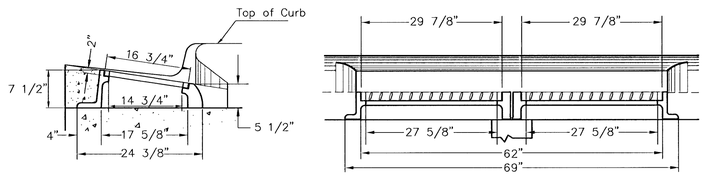

INLET FRAME WITH TWO–PIECE GRATE

(Neenah R–3288 HV2 Inlet)

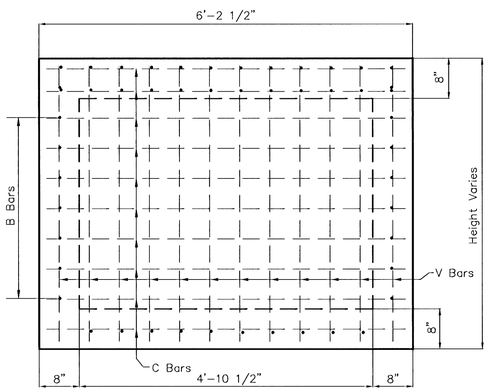

REAR WALL

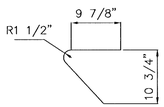

"A–1" Bar

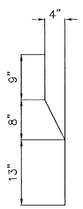

"B–1" Bar

General Notes

1. Use class A mix specified for the City of Wichita concrete pavement throughout curb inlet. All exposed edges shall be finished with an edging tool. Reinforcing bars shall be bent around pipe.
2. Inlet invert shall be shaped with 8 sack mix concrete to create flow channels and to increase hydraulic efficiency such that the inlet will be self cleaning between all inlet and/or outlet pipes.
3. All bars are #4 with 6" spacing and shall have a minimum clearance of 1 1/2" inches unless otherwise noted on the plans.
4. No deductions will be made in pay length of curb, gutter, or curb and gutter through the inlet area.
5. Use Neenah R–3288 HV2 Double Inlet Frame w/ two piece grate or approved equal. Inlet frame to be proof load tested to 40,000 lbs. on the unsupported side.
6. Reinforcing bars shall be cut or bent around pipes. No deduction in concrete quantities shall be made for pipe openings.
7. The vanes of the grate shall be oriented with respect to the flow arrows shown on the plans.
8. All castings shall be gray iron and shall comply with KDOT Standard Specifications.
9. All exposed cast iron surfaces shall be painted either in the shop topcoat or a field coat of organic zinc, each coat to be 3 to 4 mils.

Revised – Dec. 1995 – SGSJR

PROJECT NUMBER	SHEET NAME	ENGINEERING DIRECTORY
472 - 83370	Type2_d	F:\Kelog_gr\greenwich\details

DESIGN	DRAWN	APPROVED	DATE	SCALE	BAUGHMAN NO
JFB/KK	TCA	JFB	JUNE01	NONE	01 06 E045

CITY OF WICHITA, KANSAS

TYPE 2 DOUBLE CURB INLET

STANDARD DETAIL

BAUGHMAN COMPANY, P.A.
ENGINEERING, SURVEYING, & PLANNING
316-262-7271 • 315 ELLIS • WICHITA, KANSAS 67211

SHEET 15 OF 43

F:\Eng\KELOG_GR\greenwich\details\type2_d dwg Mon Jul 16 20:38:03 2001