

ALT. LONGITUDINAL CONSTRUCTION JOINT

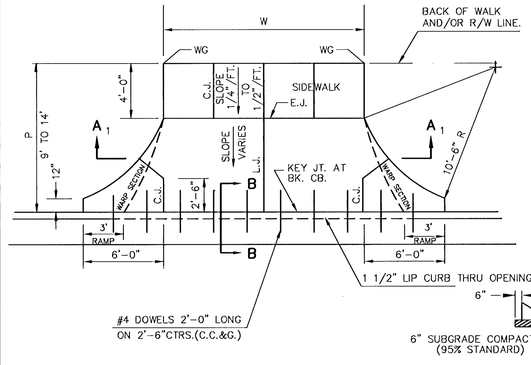

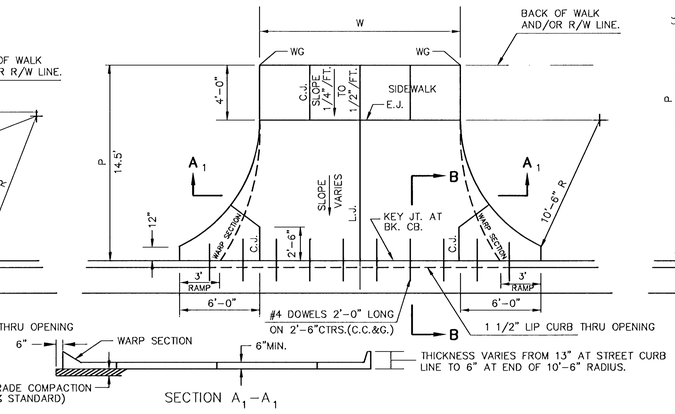

SECTION A_1-A_1

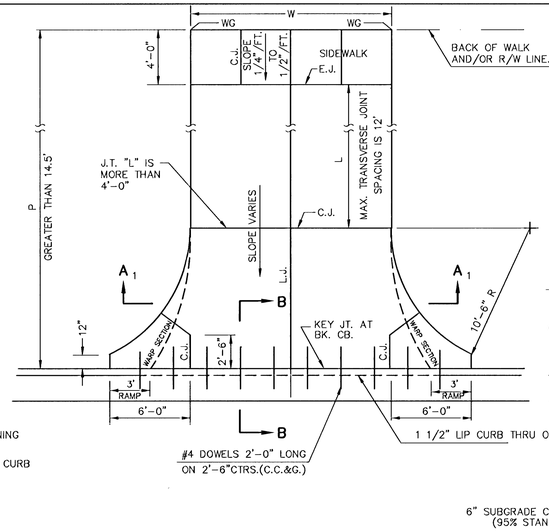

PARKING WIDTH "P"	9'	10'	11'	12'	13'	14.5'	20'	25'	30'	35'	40'	45'	50'
ABSOLUTE MAX. DIST. OF PT. "WG" ABOVE OR BELOW TOP OF FULL CURB.	0.35'	0.35'	0.40'	0.45'	0.60	0.80'	1.35'	1.85'	2.35'	2.85'	3.35'	3.85'	4.35'
OPTIMUM MAX. DIST. OF PT. "WG" ABOVE OR BELOW TOP OF FULL CURB.	0.35'	0.35'	0.40'	0.45'	0.60'	0.70'	1.04'	1.30'	1.56'	1.82'	2.08'	2.34'	2.60'
OPTIMUM MIN. DIST. OF PT. "WG" ABOVE OR BELOW TOP OF FULL CURB.	0.19'	0.21'	0.23'	0.25'	0.27'	0.30'	0.42'	0.52'	0.62'	0.72'	0.82'	0.92'	1.02'
ABSOLUTE MIN. DIST. OF PT. "WG" ABOVE OR BELOW TOP OF FULL CURB.	-.19'	-.16'	-.13'	-.10'	-.06'	0.00'	0.00'	0.15'	0.25'	0.35'	0.45'	0.55'	0.65'

RADIUS RAMP DRIVES (P=9.0' & GREATER)

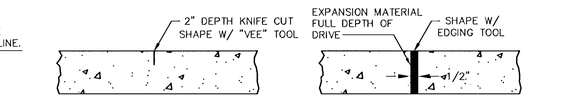

CONTRACTION JOINT (C.J.) OR LONGITUDINAL JOINT (L.J.)

EXPANSION JOINT (E.J.)

NO SAWN JOINTS WILL BE ALLOWED

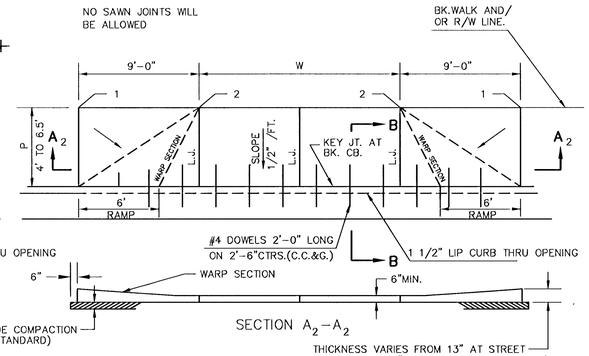

SECTION A_2-A_2

PARKING WIDTH "P"	4'	4.5'	5'	5.5'	6'	6.5'
DIST. OF PT."1" ABOVE TOP OF FULL CURB.	0.08'	0.09'	0.10'	0.12'	0.13'	0.14'
DIST. OF PT."2" BELOW TOP OF FULL CURB.	-.26'	-.24'	-.22'	-.20'	-.18'	-.16'

RADIUS RAMP DRIVE (P=4.0' TO 6.5')

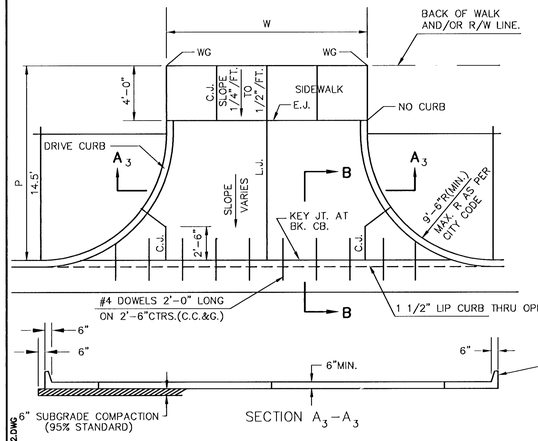

SECTION A_3-A_3

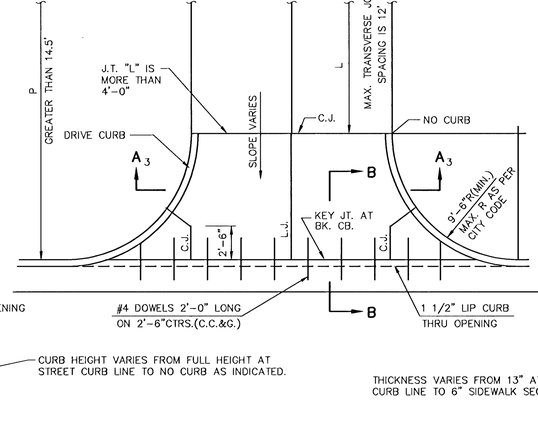

PARKING WIDTH "P"	14.5'	20'	25'	30'	35'	40'	45'	50'
ABSOLUTE MAX. DIST. OF PT. "WG" ABOVE TOP OF FULL CURB.	0.80'	1.35'	1.85'	2.35'	2.85'	3.35'	3.85'	4.35'
OPTIMUM MAX. DIST. OF PT. "WG" ABOVE TOP OF FULL CURB.	0.70'	1.04'	1.30'	1.56'	1.82'	2.08'	2.34'	2.60'
OPTIMUM MIN. DIST. OF PT. "WG" BELOW TOP OF FULL CURB.	0.30'	0.42'	0.52'	0.62'	0.72'	0.82'	0.92'	1.02'
ABSOLUTE MIN. DIST. OF PT. "WG" BELOW TOP OF FULL CURB.	0.00'	0.00'	0.15'	0.25'	0.35'	0.45'	0.55'	0.65'

FULL RADIUS DRIVES (P=14.5' & GREATER)

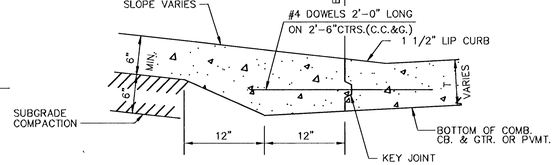

BACK OF CURB DETAIL

SECTION B – B

NO SCALE

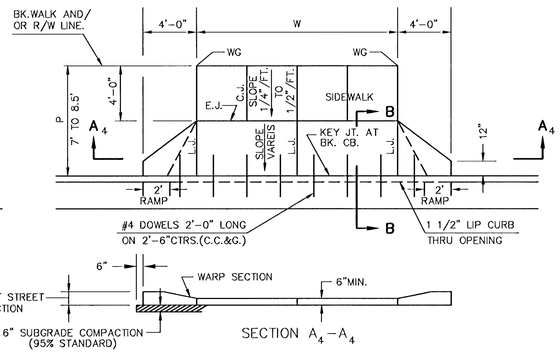

SECTION A_4-A_4

PARKING WIDTH "P"	7'	7.5'	8'	8.5'
ABSOLUTE MAX. DIST. OF PT. "WG" ABOVE TOP OF FULL CURB.	0.00'	0.10'	0.20'	0.30'
OPTIMUM MAX. DIST. OF PT. "WG" ABOVE TOP OF FULL CURB.	0.00'	0.10'	0.20'	0.30'
OPTIMUM MIN. DIST. OF PT. "WG" BELOW TOP OF FULL CURB.	-.15'	-.16'	-.17'	-.17'
ABSOLUTE MIN. DIST. OF PT. "WG" BELOW TOP OF FULL CURB.	-.25'	-.20'	-.20'	-.20'

FULL RAMP DRIVE (P=7.0' TO 8.5')

GENERAL NOTES

1. DRIVEWAY CONSTRUCTION DETAILED ON THIS SHEET IS FOR USE WITH FULL HEIGHT STREET CURBS AND IN AREAS WITHOUT FULL WALK CONSTRUCTION IN THE PARKING. SEE OTHER DETAIL SHEETS FOR DRIVEWAY CONSTRUCTION WITH ROLL CURB AND/OR FULL WALK.
2. ONE LONGITUDINAL JOINT SHALL BE CONSTRUCTED ALONG THE CENTERLINE OF DRIVES HAVING A "W" DIMENSION OF 24' OR LESS. TWO LONGITUDINAL JOINTS SHALL BE CONSTRUCTED WITH EQUAL SPACINGS NOT TO EXCEED 10' FOR DRIVES WITH A "W" DIMENSION GREATER THAN 24'.
3. DRIVEWAY WIDTH DENOTED AS "W" ON THE DETAIL DRAWINGS SHALL BE A MINIMUM OF 10' AND A MAXIMUM OF 30'. THE MAXIMUM OPENING FOR RADIUS TYPE DRIVES WITH CURBS THROUGH THE RADIUS SHALL NOT EXCEED 52' AT THE STREET CURB LINE.
4. CONTRACTION JOINT SPACING IN THE DRIVEWAY WALK SECTION SHALL BE A MINIMUM OF 3' AND A MAXIMUM OF 6' AND ARE TO BE EQUALLY SPACED WITHIN THIS RANGE. WALK SECTION SHALL BE CONSTRUCTED TO THE SAME THICKNESS AS THE DRIVEWAY.
5. DOWEL BARS SHALL BE OMITTED FROM THE KEYED CONSTRUCTION JOINT ALONG THE BACK OF THE STREET CURB LINE WHEN DRIVEWAYS ARE CONSTRUCTED IN CONJUNCTION WITH NEW CONCRETE PAVEMENT CONSTRUCTION.
6. ADDITIONAL THICKNESS OF DRIVE AS INDICATED IN THE DRAWINGS WILL NOT BE PAID FOR DIRECTLY AND THIS COST SHALL BE INCLUDED IN THE UNIT PRICE BID FOR THE DRIVEWAY CONSTRUCTION.
7. ONE HALF INCH EXPANSION JOINTS SHALL BE INSTALLED WHEREVER DRIVE CONSTRUCTION ABUTS SIDEWALK. ONE HALF INCH EXPANSION JOINTS SHALL ALSO BE INSTALLED ALONG THE PROPERTY LINE AND/OR BACK OF WALK LINE WHEN DRIVE CONSTRUCTION ALONG THIS LINE ABUTS CONCRETE PARKING LOTS OR CONCRETE DRIVE EXTENSION.
8. ALL DRIVEWAYS SHALL BE A MINIMUM OF 6" IN THICKNESS AND SHALL BE WITHOUT REIN–FORCEMENT. DRIVEWAYS MAY BE CONSTRUCTED THICKER THAN 6" AND THEY MAY BE REINFORCED WITH 6"x12" W4–W4 WELDED WIRE FABRIC WHEN PROPERLY AUTHORIZED BY THE PROPERTY OWNER WITH THE ENGINEER'S CONCURRENCE.
9. OPTIMUM DRIVEWAY ELEVATIONS SHOWN IN THE TABLES ARE TO BE USED WHEREVER POS–SIBLE. ABSOLUTE MAXIMUM AND MINIMUM ELEVATIONS ARE TO BE USED ONLY WHEN THESE VALUES WILL PERMIT NEW CONSTRUCTION TO MATCH EXISTING DRIVES OR PARKING LOTS. VALUES SHOWN IN THE TABLES ARE BASED ON A FULL CURB HEIGHT ELEVATION OF 0.55' ABOVE THE GUTTER FLOW LINE AND MUST BE ADJUSTED ACCORDINGLY FOR OTHER CURB HEIGHTS. VALUES SHOWN IN THE TABLES WITH MINUS SIGNS INDICATE ELEVATIONS BELOW TOP OF FULL HEIGHT CURB.

REVISED: OCTOBER 1985

STANDARD DRIVE ENTRANCES FULL HEIGHT CURB

CITY OF WICHITA, KANSAS

3 / 14

Design	Checked by	Checked by	
Drawn by	Date	Date	Job No.

H:\CIVIL\96034\PAVE\96034ED2.DWG M:\CIVIL\96034\PAVE\96034E02.DWG Tue Nov 28 12:07:22 2000