NORTHWEST SEWER IMPROVEMENTS PROGRAM

MAIN 3 (PART A)

From 900' West of 119th Street West to 100' East of Parkridge North
Parallel to 21st Street North
CITY OF WICHITA, KANSAS
MICHAEL E. LINDEBAK, P.E. - CITY ENGINEER
PROJECT NO. 468-83133
OCA # 624060

MAIN 1 FORCE MAIN (PART B)

From 350' East of Parkdale North to 100' East of Parkridge North
Parallel to 21st Street North
CITY OF WICHITA, KANSAS
MICHAEL E. LINDEBAK, P.E. - CITY ENGINEER
PROJECT NO. 468-83131
OCA # 624058

GENERAL NOTES

1. Contractor will be required to provide a minimum advance notice of forty-eight (48) hours to utility companies prior to starting any excavation as follows:

Kansas One-Call	687-2470

2. The Contractor must notify the following in case of an emergency:

Cox Communications	262-0661
Kansas Gas Service	832-3169
KGE	383-8600
Peoples Natural Gas Company	946-0096
Southwestern Bell Telephone Company	1-800-734-7590
City of Wichita Water Department	262-6000
City of Wichita Sewer Maintenance	262-6000

3. Contractor shall not start work on the project until the project inspector is assigned to the project and is present on the site. Any work done without inspection will be required to be uncovered for inspection.
4. Rubble from the removal of miscellaneous structures and excess excavation which is to be wasted shall be disposed of on sites to be provided by the Contractor. These sites shall be approved by the Engineer as to suitability, appearance and site location. Locations that, in the opinion of the Engineer, will leave an unsightly appearance will not be approved.
5. All disposal sites must be approved by the Kansas Department of Health and Environment. Material either stockpiled or disposed of in a flood plain would require a Kansas State Board of Agriculture permit. Any material dumped in waters of the United States or wetlands is subject to U.S. Corps of Engineers permitting regulations. Any material buried or stockpiled beyond approved construction limits would require additional archeological investigations unless buried in a previously approved borrow location.
6. Trees and shrubs in public right-of-way which are in direct conflict with proposed new construction shall be removed by the Contractor with the Engineer's approval. Trees and shrubs which are not in direct conflict with proposed new construction shall be saved and protected from damage.
7. The Contractor shall be responsible for preserving property irons. The Contractor will be required to re-establish any property irons which are damaged or destroyed by his construction operations. Such irons shall be re-established by a licensed land surveyor in accordance with state laws.
8. All construction involving the new sewer system shall be in accordance with City of Wichita Standard Specifications dated March 1998.
9. 2-way traffic will need to be maintained at all times throughout the project.
10. Force main piping shall be either DICL Pressure Class 350, HDPE C906-90 or PVC C-900 Pressure Class 100 in accordance with City of Wichita Standard Specifications for waterline construction. Installation of force main may be done by open-cut method or directional drilling. The procedure used shall comply with City of Wichita Standard Specifications. Open cut method shall have the backfill above a depth of 12" over top of sewer pipe compacted to 95% of standard density.
11. Force main shall under go a pressure test to 100 psi per City of Wichita Standard Specifications for waterline construction.
12. Directional drilling or boring of force mains under drives, streets and/or trees must be approved by the Construction Engineer. Drilling or boring without casing pipe will be allowed. The Contractor will be responsible for any pavement settlement caused by drilling or boring the new force main. The Contractor will submit in writing his proposed method for drilling or boring of pipe to the Engineer for approval prior to any construction. Any pipe installed by a method not approved by the Engineer in writing will be removed.
13. Asphalt pavement replacement shall be considered and bid 'Temporary Pavement Replacement'. Pavement replacement shall consist of 5" asphalt cement pavement. NO COLD PATCH ALLOWED. Contractor shall maintain temporary pavement until the paving contractor starts the 21st Street North improvements.
14. The Contractor shall not bury manholes that have rim elevations which are lower than existing ground at the manhole. The ground around such manholes and along the sewer alignment shall be backfilled to the approximate elevation of the proposed ground elevation shown on the plan/profile sheets. The Contractor shall provide drainage away from these manholes and sewer lines by construction of temporary ditches or sloping the ground as required. All costs for this work shall be considered subsidiary to the lump sum price bid for 'Site Restoration'.
15. The Contractor shall provide mounded earth at manholes that have top elevations greater than 1 foot above existing grade as shown on the plans. Costs for mounding shall be considered subsidiary to the lump sum price bid for 'Site Restoration'.
16. All manhole interiors need to be plastic lined or coated with an approved equal.
17. Properties within the project may have underground irrigation systems (lawn sprinklers) which conflict with new construction. Contractor shall remove such components as needed during construction of the project. The irrigation system shall be reinstalled in like kind before project completion. Any irrigation system modifications required because of project improvements shall be coordinated with the property owner. Portions of underground irrigation systems not in conflict with new construction shall be protected from damage and shall remain in place.

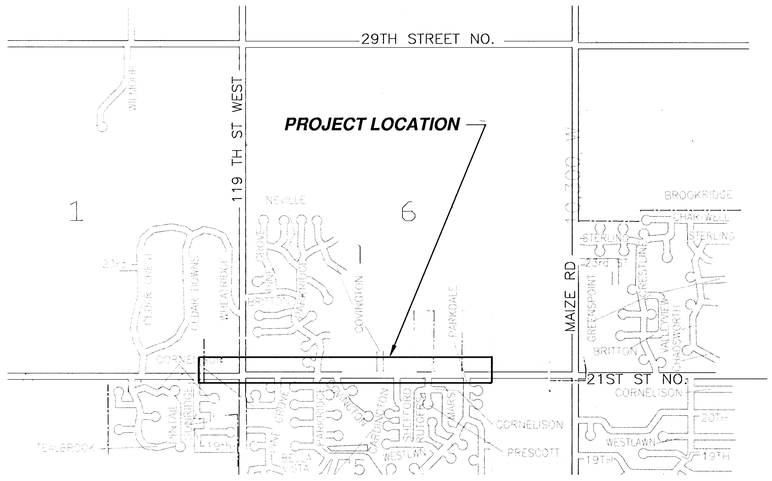

INDEX

1. TITLE SHEET
2-3. LINE 1 (PART A)
4. STANDARD TYPE 'P' MANHOLE (PART A)
5. MANHOLE FRAME AND COVER (PART A)
6-8. LINE 1 (PART B)
9. MISCELLANEOUS DETAILS (PART B)

SRB

AS BUILT
4/24/03
R. Loomis
P.D.F.

WILLIAM E. SAUER
NUMBER 15620
05-15-2004
KANSAS
PROFESSIONAL ENGINEER

1639X / 1706X

Professional Engineering Consultants, P.A.
303 S. TOPEKA • WICHITA, KANSAS 67202
316-262-2691 • FAX 316-262-3003

SRB 924 NORTH MAIN WICHITA, KANSAS 67203 316-264-8008 FAX 264-4621
SAVOY, RUGGLES & BOHM, P.A.
ENGINEERING & SURVEYING

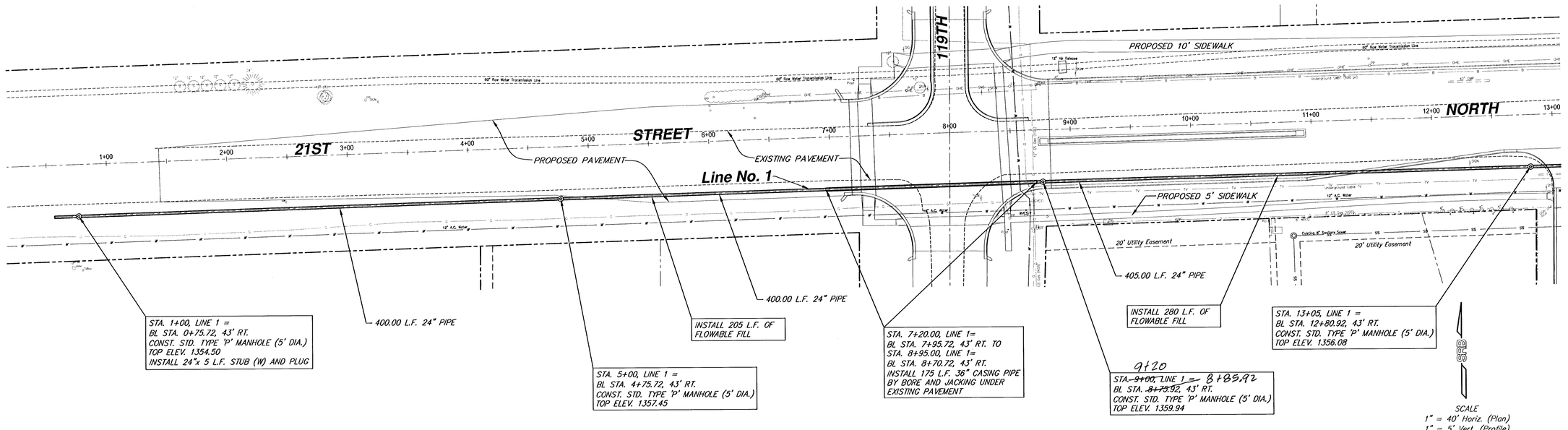

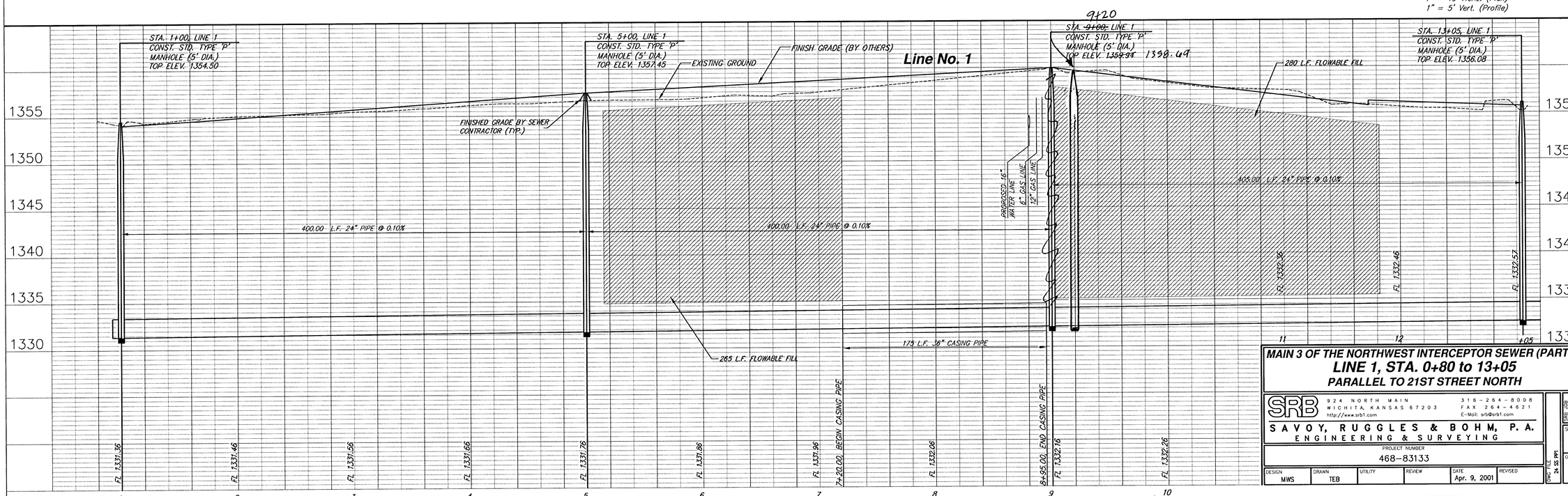

MAIN 3 OF THE NORTHWEST INTERCEPTOR SEWER (PART A)
LINE 1, STA. 0+80 to 13+05
PARALLEL TO 21ST STREET NORTH

SRB
924 NORTH MAIN
WICHITA, KANSAS 67203
http://www.srb1.com
316-264-8008
FAX 264-4621
E-Mail: srb@srb1.com
SAVOY, RUGGLES & BOHM, P.A.
ENGINEERING & SURVEYING

PROJECT NUMBER 468-83133

DESIGN	DRAWN	UTILITY	REVIEW	DATE	REVISED
MWS	TEB			Apr. 9, 2001	

DWG FILE 24-SS.PPT

SRB JOB 16304

SHEET 2 OF 9

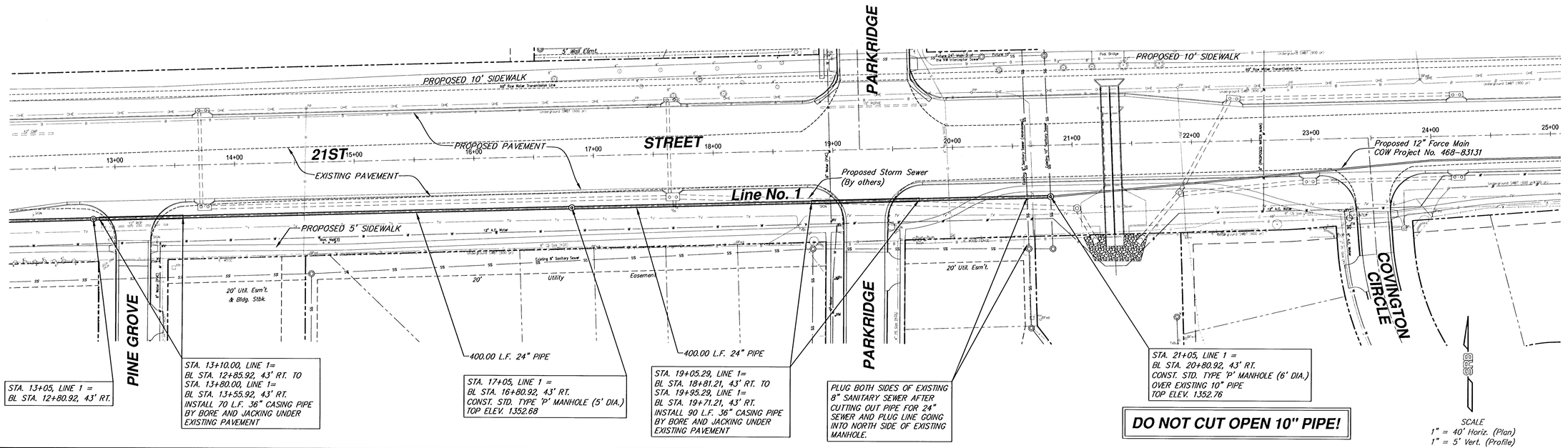

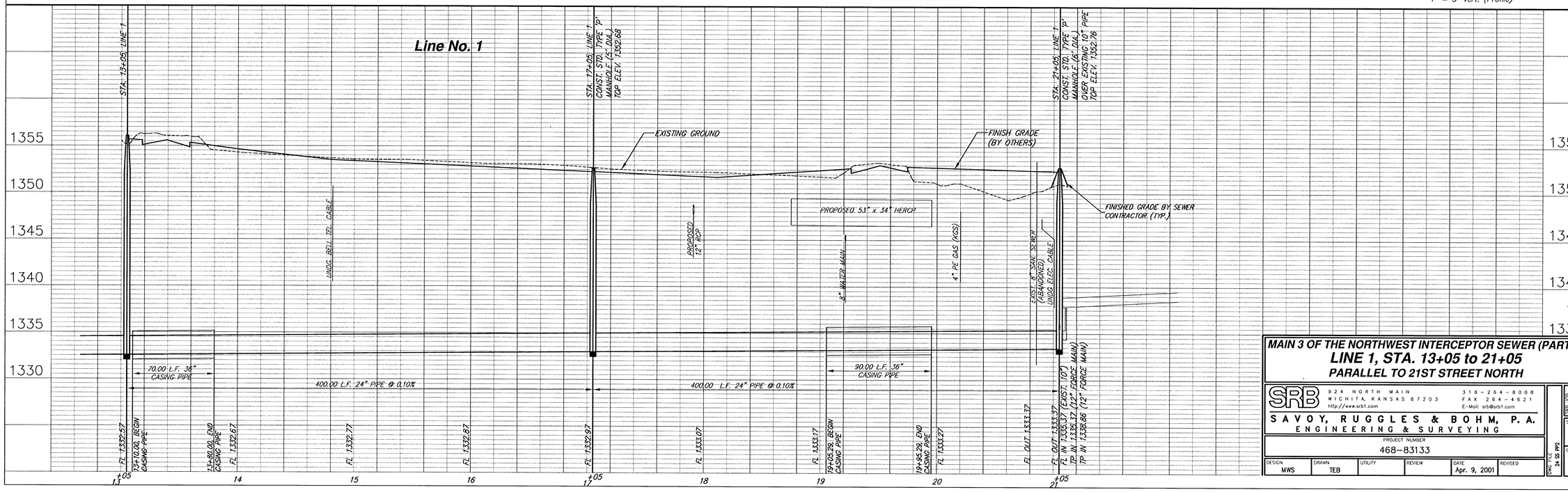

MAIN 3 OF THE NORTHWEST INTERCEPTOR SEWER (PART A)

LINE 1, STA. 13+05 to 21+05

PARALLEL TO 21ST STREET NORTH

SRB
924 NORTH MAIN
WICHITA, KANSAS 67203
http://www.srb1.com
316-264-8008
FAX 264-4621
E-Mail: srb@srb1.com

SAVOY, RUGGLES & BOHM, P. A.
ENGINEERING & SURVEYING

PROJECT NUMBER					
468-83133					
DESIGN	DRAWN	UTILITY	REVIEW	DATE	REVISED
MWS	TEB			Apr. 9, 2001	

DWG. FILE 24_S1.tif2

SRB JOB 1830A

SHEET 3 OF 9

SEWER APPURTENANCES DETAILS

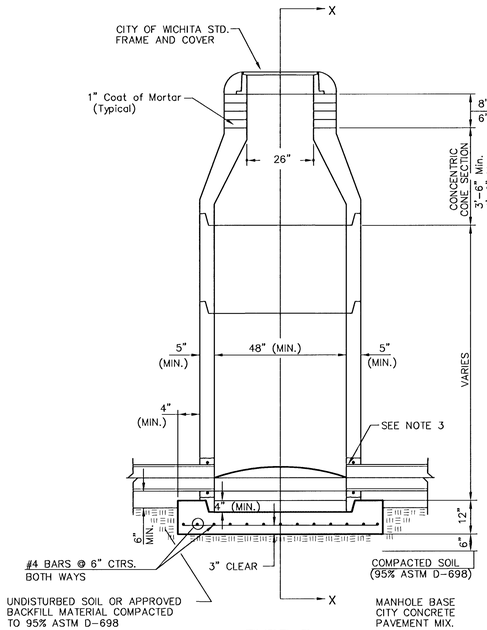

TYPE P
STANDARD MANHOLE

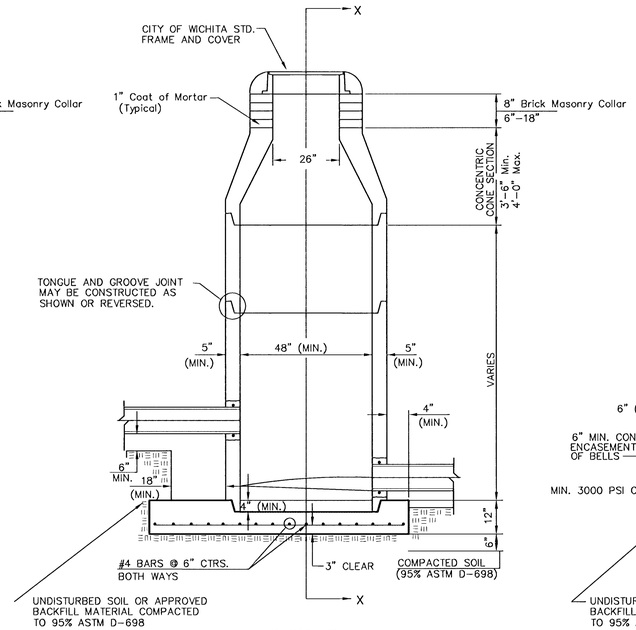

TYPE P
INSIDE DROP MANHOLE

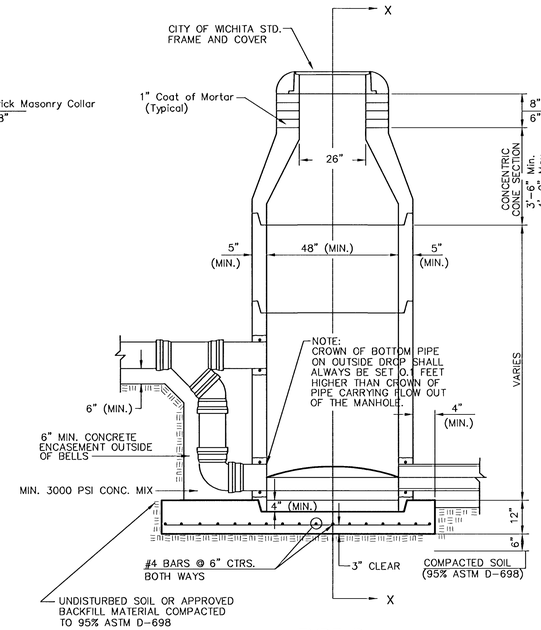

TYPE P
OUTSIDE DROP MANHOLE

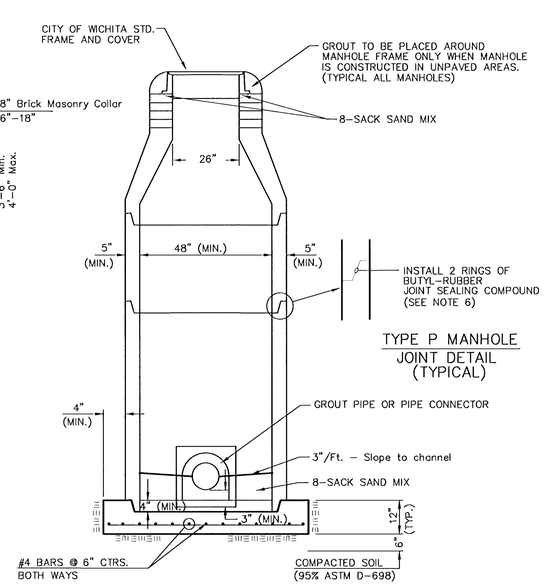

SECTION X
(TYPICAL)

GENERAL NOTES

PRECAST MANHOLE NOTES

1. ALL PRECAST CONCRETE MANHOLE SECTIONS SHALL CONFORM TO THE LATEST REVISIONS OF A.S.T.M. C478 AS MODIFIED BY THE SPECIFICATIONS.
2. NON–SHRINK GROUT SHALL BE NON–METALLIC TYPE.
3. APPROVED FLEXIBLE WATERSTOP GASKETS SHALL BE INSTALLED TO JOIN THE SEWER TO THE MANHOLE WALL WHEN A.B.S. COMPOSITE PIPE OR P.V.C. PIPE IS USED. FOR OTHER TYPES OF PIPE THE SEWER SHALL BE GROUTED IN PLACE WITH NON–SHRINK GROUT. THE SEWER PIPE SHALL BE SUPPORTED WITH CONCRETE ENCASEMENT A MINIMUM OF 3 FEET FROM THE MANHOLE WALL AND TO THE FIRST JOINT FOR V.C.P. SUCH THAT THE JOINT REMAINS FLEXIBLE.
4. ALL INSIDE SURFACES OF THE CONCRETE MANHOLE WHICH WOULD BE EXPOSED TO SEWER GAS SHALL BE COATED WITH 2 COATS TNEMEC SERIES 66 HI–BUILD EPOXOLINE, DRY THICKNESS OF 8 MILS (MIN.)
5. EXTERIOR MANHOLE WALLS SHALL BE COATED WITH 1 COAT MOBILARMA 633 BITUMINOUS COATING.
6. JOINT SEALING COMPOUND SHALL BE KENT SEAL NO. 2 OR APPROVED EQUAL.
7. PRECAST MANHOLES SHALL BE SET AT LEAST 4 INCHES INTO THE MANHOLE BASE.
8. TOP OF MANHOLE FLOOR SLAB SHALL BE AT LEAST 3 INCHES BELOW THE FLOW LINE OF THE OUTLET PIPE TO INSURE SUFFICIENT MINIMUM THICKNESS OF SHAPED INVERT.
9. LIFTING HOLES SHALL BE FILLED WITH NON–SHRINK GROUT AND THE INTERIOR SURFACE COATED AS SPECIFIED.
10. MORTAR USED IN MASONRY CONSTRUCTION SHALL CONTAIN 8 SACKS OF CEMENT PER CUBIC YARD. CONCRETE USED IN MANHOLE BASES SHALL CONFORM TO THE REQUIREMENTS OF CONCRETE FOR CONCRETE PAVEMENT CONSTRUCTION AS SPECIFIED IN THE CITY STANDARD PAVING SPECIFICATIONS USING CITY CONCRETE PAVEMENT MIX WITHOUT AIR ENTRAINING ADMIXTURE. MORTAR SHALL BE PLACED AROUND THE MANHOLE RING AS SHOWN ON THE DRAWINGS WHEN MANHOLES ARE CONSTRUCTED IN UNPAVED AREAS. MANHOLES CONSTRUCTED WHERE PIPE SIZES ARE SMALLER THAN 24" SHALL HAVE AN INSIDE DIAMETER OF 4'. MANHOLES CONSTRUCTED WHERE PIPE SIZES ARE 24" OR LARGER SHALL HAVE AN INSIDE DIAMETER OF 5'. COMPLETED MANHOLE SHALL BE WITHOUT LEAKS AND WATER TIGHT.
11. REINFORCING STEEL SHALL BE INSTALLED IN THE MANHOLE BASES AND SHALL CONSIST OF NO. 4 BARS PLACED ON 6" CENTERS IN BOTH DIRECTIONS. THE MANHOLE BASE REINFORCEMENT SHALL BE PLACED AT LEAST 3" ABOVE THE BOTTOM OF THE MANHOLE BASE. ALL COSTS FOR FURNISHING AND INSTALLING REINFORCING STEEL SHALL BE INCLUDED IN THE UNIT PRICE BID FOR THE MANHOLE.
12. OPENINGS SHALL BE CUT INTO THE MANHOLE WALL WHEN OUTSIDE DROPS ARE CONSTRUCTED ON EXISTING MANHOLES. SUCH OPENINGS CUT INTO EXISTING MANHOLES SHALL BE AS SMALL AS PRACTICAL TO FACILITATE INSTALLING AND GROUTING THE NEW PIPE IN PLACE. WATERSTOP GASKETS SHALL BE USED WITH P.V.C. AND A.B.S. COMPOSITE PIPE. THE NEW PIPE SHALL BE GROUTED INTO THE OPENING USING AN APPROVED NONSHRINK GROUT FOR THE FULL MANHOLE WALL THICKNESS. THE EXTERIOR OF THE COMPLETED CONNECTION SHALL BE SEALED WITH AN APPROVED BITUMINOUS COATING SUCH THAT THE CONNECTION WILL BE WATER TIGHT. FLOOR OF MANHOLE SHALL BE MODIFIED TO FORM NEW FLOW CHANNEL FOR THE NEW CONNECTION AS INDICATED BY THE DRAWING. THIS WORK, INCLUDING MODIFICATION OF MANHOLE FLOOR, SHALL BE PAID FOR AT THE UNIT PRICE BID FOR OUTSIDE DROP STACK CONSTRUCTED ON EXISTING MANHOLE.
13. THE FLOORS OF ALL MANHOLES SHALL BE SHAPED WITH FLOW CHANNELS SUCH THAT THE MANHOLES WILL BE SELF CLEANING AND FREE OF AREAS WHERE SOLIDS COULD BE DEPOSITED AS SEWAGE FLOWS THROUGH THE MANHOLE FROM ALL INLET PIPES TO THE OUTLET PIPE. FLOW CHANNELS SHALL BE FORMED TO MATCH THE BOTTOM HALVES OF THE INFLOWING PIPES AND THE OUTFLOWING PIPE AS SHOWN BY THE DRAWINGS EXCEPT FOR INSIDE DROP MANHOLES. FLOW CHANNELS FOR INSIDE DROP MANHOLES SHALL BE CONSTRUCTED AS INDICATED BY THE DRAWING. MANHOLE FLOORS SHALL HAVE SLOPES OF 3 INCHES PER FOOT IN THE AREAS OUTSIDE OF THE FLOW CHANNELS SLOPED TOWARD THE FLOW CHANNELS. PIPES LAID THROUGH MANHOLES SHALL HAVE THE TOP HALF REMOVED TO NEAT LINES FOR THE FULL INSIDE DIAMETER OF THE MANHOLE. MANHOLE FLOORS SHALL THEN BE SHAPED AROUND THE BOTTOM HALF OF THE PIPE WHICH FORMS THE FLOW CHANNEL.
14. PIPES INSTALLED WITHIN THE EXCAVATION MADE FOR THE MANHOLE SHALL BE CRADLED WITH CONCRETE TO THE LIMITS OF THE MANHOLE EXCAVATION. WHEN CLAY PIPE IS USED, THE CRADLE SHALL EXTEND TO THE FIRST JOINT OUTSIDE THE MAHOLE. THE CRADLE SHALL BE TERMINATED AT THE CLAY PIPE JOINT IN A MANNER WHICH WILL MAINTAIN THE FLEXIBILITY OF THE JOINT. COST OF CRADLE WITHIN MANHOLE EXCAVATION OR TO CLAY PIPE JOINTS ADJACENT TO MANHOLE SHALL BE INCLUDED IN THE UNIT PRICE BID FOR THE MANHOLE.
15. MANHOLE COVER CASTINGS AND MANHOLE FRAME CASTINGS SHALL CONFORM TO THE REQUIREMENTS AS INDICATED IN THE STANDARD SPECIFICATIONS AND AS SHOWN IN THE STANDARD DETAIL DRAWING.
16. THE VERTICAL DROP IN INSIDE DROP MANHOLES SHALL NOT EXCEED 2' FOR INFLOWING PIPES SIZED 12" OR SMALLER AND 2' FOR INFLOWING PIPES LARGER THAN 12". THE CROWNS OF INFLOWING PIPES SHALL NEVER BE SET LOWER THAN THE CROWN OF THE OUTFLOWING PIPE.
17. STANDARD MANHOLES AND STANDARD INSIDE DROP MANHOLES SHALL BE BID AS STANDARD MANHOLES FOR THE TYPE AND DIAMETER INDICATED. OUTSIDE DROP MANHOLES SHALL BE BID AS STANDARD OUTSIDE DROP MANHOLES FOR THE TYPE AND DIAMETER INDICATED. ALL MANHOLE DIAMETERS WILL BE 4' UNLESS INDICATED OTHERWISE.
18. A BRICK MASONRY COLLAR SHALL BE INSTALLED BETWEEN THE CAST IRON FRAME AND THE CONCENTRIC CONE. THE COLLAR WILL HAVE 8" WALLS AND A VERTICAL HEIGHT OF 6" MINIMUM AND 18" MAXIMUM. A 1" COAT OF MORTAR WILL BE PLASTERED ON THE OUTSIDE OF THE COLLAR. THE USE OF PRE–CAST CONCRETE SPACERS FOR MANHOLE TOP ADJUSTMENT IS ALSO ALLOWED.

THE CITY OF WICHITA

CITY ENGINEER'S OFFICE
CITY HALL – SEVENTH FLOOR
455 NORTH MAIN STREET
WICHITA, KANSAS 67202
(316) 268-4401
(316) 268-4414 FAX

STANDARD TYPE 'P' MANHOLES

M. E. LINDEBAK P.E. – CITY ENGINEER

PROJECT NUMBER	OCA #
468-83133	624060
DATE: MAR 96	SHEET 4 OF 9

MANHOLE FRAME AND COVER DETAIL

ADOPTED AS STANDARD DESIGN BY
CITY OF WICHITA, KANSAS

MANHOLE COVER
Weight = 180 Lbs.

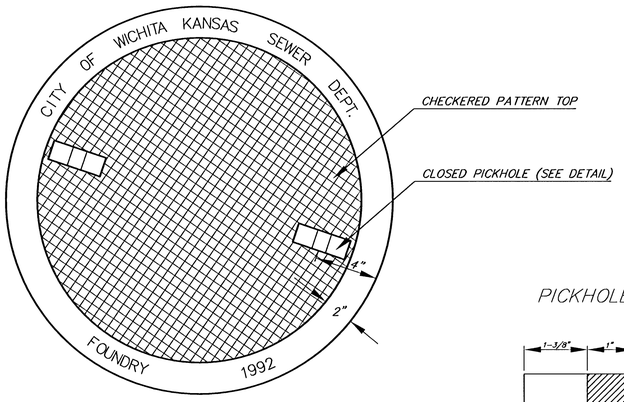

TOP VIEW

PICKHOLE DETAIL

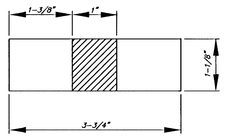

TOP VIEW

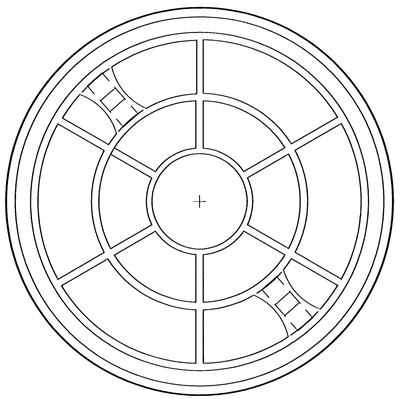

BOTTOM VIEW

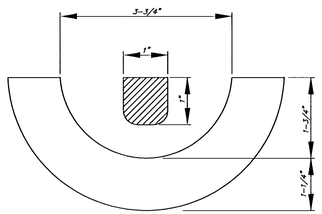

SECTION VIEW

MANHOLE FRAME
Weight = 240 Lbs.

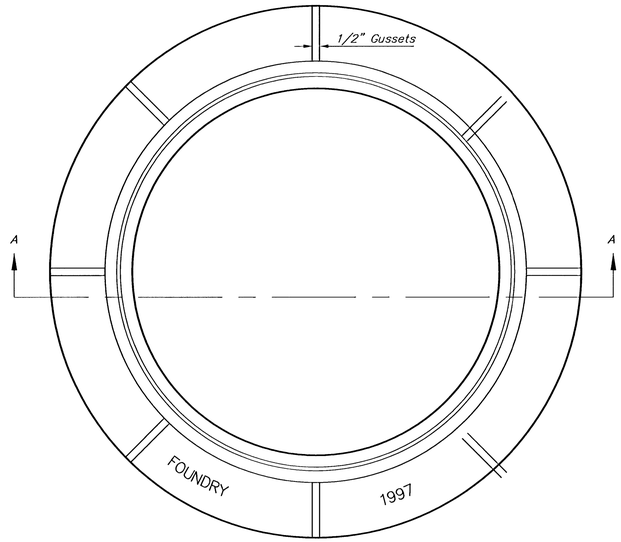

TOP VIEW

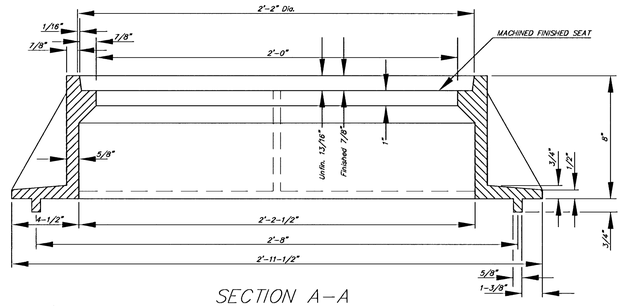

SECTION A-A
MUD RING

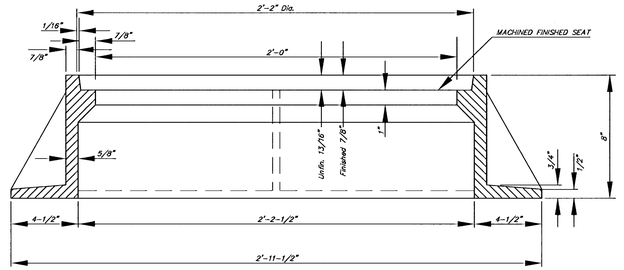

SECTION A-A

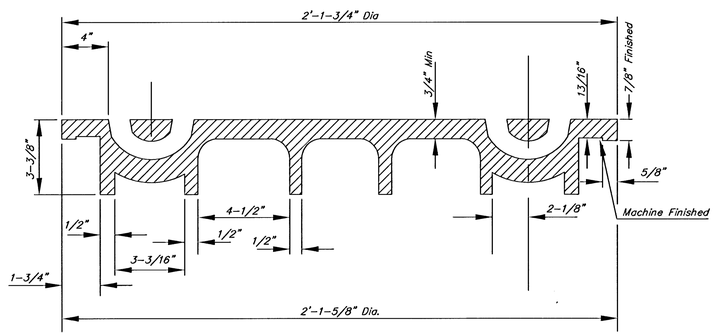

SECTION VIEW

GENERAL NOTES

1. MANHOLE CASTINGS SHALL BE MANUFACTURED USING GOOD QUALITY GRAY IRON CONFORMING TO CLASS 30 OF A.S.T.M. DESIGNATION A-48. DIMENSIONS AND WEIGHTS SHOWN ON THE DETAILED DRAWINGS SHALL BE CONSIDERED AS MINIMUM REQUIREMENTS AND ANY DEVIATIONS FROM THE DIMENSIONS SHOWN MUST BE SPECIFICALLY APPROVED. THE FINISHED CASTINGS SHALL BE OF UNIFORM QUALITY, FREE FROM BLOWHOLES, POROSITY, HARD SPOTS, SHRINKAGE DISTORTIONS OR OTHER DEFECTS.

2. MANHOLE CASTINGS SHALL WEIGH A MINIMUM OF 180 POUNDS ON THE SOLID COVER AND 240 POUNDS ON THE MANHOLE RING. THIS IS A TOTAL OF 420 POUNDS ON A RING AND COVER SET. CASTINGS WEIGHING LESS THAN THE MINIMUM SPECIFICATIONS WILL NOT BE ACCEPTED.

3. MANHOLE CASTINGS SHALL BE MANUFACTURED SUCH THAT A COVER MANUFACTURED BY ANY ONE FOUNDARY WILL FIT INTERCHANGEABLY INTO A FRAME MANUFACTURED BY ANOTHER FOUNDRY AND STILL MEET ALLOWABLE CLEARANCES AND NON-ROCKING REQUIREMENTS. THIS WILL REQUIRE MANUFACTURING OF THE MATCHING FACES ON THE COVER AND THE FRAME TO CLOSE TOLERANCES.

4. THE OUTSIDE CIRCUMFERENCE OF THE VERTICAL FACE OF THE COVER AND THE INSIDE CIRCUMFERENCE OF THE VERTICAL FACE IN THE FRAME RECESS SHALL BE MANUFACTURED TO TOLERANCES SUCH THAT THE CLEARANCE BETWEEN THE COVER AND FRAME WILL NOT EXCEED 1/8" AT ANY POINT AROUND THE CIRCUMFERENCE OF THE COVER. THE SEATING SURFACES BETWEEN THE COVER AND FRAME SHALL BE MACHINED SUCH THAT THESE SEATING SURFACES SHALL MAKE FULL CONTACT FOR THEIR FULL CIRCUM-FERENCE TO PRECLUDE THE COVER FROM ROCKING IN THE FRAME.

5. THE MANHOLE FRAME AND COVER SHALL BE MARKED WITH LETTERING INDICATING THE NAME OF THE MANUFACTURER AND THE YEAR WHEN THE COVER OR FRAME WAS CAST. THE COVER SHALL BE FURTHER IDENTIFIED WITH REGARDS TO OWNERSHIP USING LETTERS AT LEAST 1 INCH IN HEIGHT. THIS IDENTIFICATION SHALL BE "CITY OF WICHITA SEWER DEPARTMENT". THE WORD DEPARTMENT MAY BE ABBREVIATED. THE TEXTURE OF THE TOP SURFACE OF THE COVER SHALL BE MANUFACTURED IN A CHECKERED PATTERN DESIGN AS INDICATED ON THE DRAWINGS. SMOOTH BLOCKOUTS SHALL BE UTILIZED TO HIGHLIGHT THE LETTERING ON THE COVER SURFACE. THE TOTAL AREA OF SMOOTH SURFACE BLOCKOUT SHALL NOT EXCEED THE AREA AS INDICATED ON THE DRAWING. POSITIONING OF SMOOTH BLOCKOUTS AND LETTERING MAY VARY FROM THAT SHOWN ON THE DETAILED DRAWING.

THE CITY OF WICHITA
CITY ENGINEER'S OFFICE
CITY HALL - SEVENTH FLOOR
455 NORTH MAIN STREET
WICHITA, KANSAS 67202
(316) 268-4501
(316) 268-4114 FAX

MANHOLE FRAME AND COVER

M. E. LINDEBAK P.E. - CITY ENGINEER

PROJECT NUMBER	OCA #
468-83133	624060
DATE MAR '96	SHEET 5 OF 9

STA. 0+03.56, LINE 1 =
BL STA. 20+85.92, 43' RT.
INSTALL ONE (1) FORCE MAIN WARNING SIGN. FOR DETAILS, SEE SHEET 2

C A U T I O N !
UNDERGROUND
PHONE LINES

PROPOSED 8" WATERLINE.
VERIFY DEPTH AND LOCATION
PRIOR TO FORCE MAIN CONSTRUCTION.

COVINGTON

STA. 12+00, LINE 1 =
BL STA. 32+80.02, 16.00' LT
MATCH POINT

MATCH LINE

20' Drainage & Utility Easement
20' Utility Easement
20' Util. & Dr. Esmt.
5' Wall Esmt.
Proposed 10" Sanitary Sewer
Future 10' Wall Pavement
Ped. Bridge
60' Ave Wide Turnaround Esmt.
PROPOSED 10' SIDEWALK
PROPOSED SWS
21ST STREET NORTH
Line No. 1
PROPOSED PAVEMENT
EXISTING PAVEMENT
4+96 - MJ Sleeve
5+04 - MJ Sleeve
PROPOSED 5' SIDEWALK
COVINGTON CIRCLE
SHEFFORD
21+00
22+00
23+00
24+00
25+00
26+00
27+00
28+00
29+00
30+00
31+00
32+00
33+00
12" A.C. Wall
Existing Inlet Top Elev. 401.43 Flume 392.52
Existing Inlet Top Elev. 397.10 Flume 382.12
SPLIT RAIL (TYP.)
254.90 L.F. 12" FORCE MAIN
STA. 9+45.10 LINE 1
BL STA. 30+25.13, 16.00' RT.
DEFLECT 1°30'00" RT.
INSTALL 276 L.F. OF FLOWABLE FILL
CRB

Proposed 24" Sanitary Sewer COW Project No. 468-83133

REMOVE CONCRETE APRON AND REPLACE WITH 27 sq. yds. HEAVY STONE RIPRAP (TEMPORARY).

STA. -0+01.44 LINE 1
BL STA. 20+80.92, 43' RT.
PROPOSED MANHOLE (COW PROJECT NO. 468-83133)
BEGIN 12" FORCE MAIN CONSTRUCTION.
CONSTRUCT STANDARD OUTSIDE DROP.

STA. 2+02.17 LINE 1
BL STA. 22+84.53, 43' RT.
1 - 11 1/4° CICL MJ BEND
DEFLECT 11°15'00" LT.

203.61 L.F. 12" FORCE MAIN

STA. 3+20.06 LINE 1
BL STA. 24+00.16, 20' RT.
1 - 11 1/4° CICL MJ BEND
DEFLECT 11°15'00" RT.

117.89 L.F. 12" FORCE MAIN

500.00 L.F. 12" FORCE MAIN

REMOVE AND REPLACE
964 L.F. ASPHALT PAVEMENT

INSTALL 640 L.F. OF FLOWABLE FILL

STA. 8+74.77 TO STA. 9+24.77 LINE 1
BL STA. 29+54.84, 18.45' RT. TO
BL STA. 30+04.82, 16.65' RT.
INSTALL 50 L.F. 24" CASING
PIPE UNDER EXISTING & PROPOSED RCB

125.04 L.F. 12" FORCE MAIN

STA. 8+20.06 LINE 1
BL STA. 29+00.16, 20' RT.
DEFLECT 1°30'00" LT.

SCALE
1" = 40' Horiz. (Plan)
1" = 5' Vert. (Profile)

** UNLESS NOTED OTHERWISE, GRADES ARE TO TOP OF PIPE **

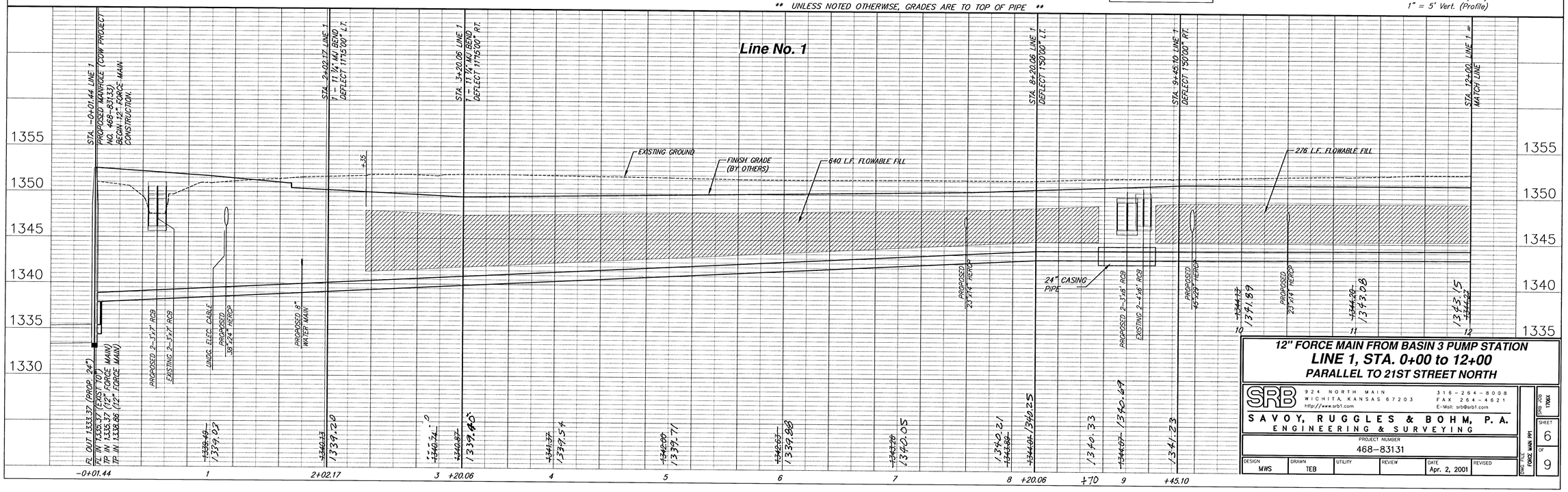

12" FORCE MAIN FROM BASIN 3 PUMP STATION
LINE 1, STA. 0+00 to 12+00
PARALLEL TO 21ST STREET NORTH

SRB
924 NORTH MAIN
WICHITA, KANSAS 67203
http://www.srb1.com
316-264-8008
FAX 264-4621
E-Mail: srb@srb1.com
SAVOY, RUGGLES & BOHM, P.A.
ENGINEERING & SURVEYING

PROJECT NUMBER 468-83131

DESIGN	DRAWN	UTILITY	REVIEW	DATE	REVISED
MWS	TEB			Apr. 2, 2001	

DWG. TITLE: FORCE MAIN PP1

SRB JOB 1700A

SHEET 6 OF 9

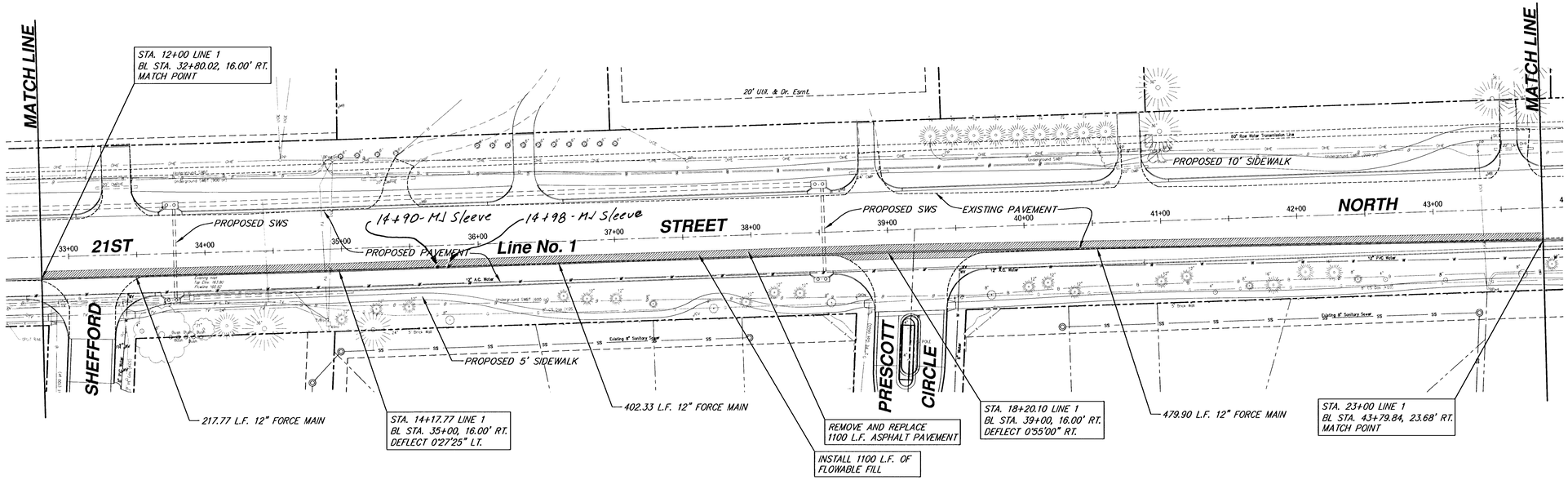

SCALE
1" = 40' Horiz. (Plan)
1" = 5' Vert. (Profile)

** UNLESS NOTED OTHERWISE, GRADES ARE TO TOP OF PIPE **

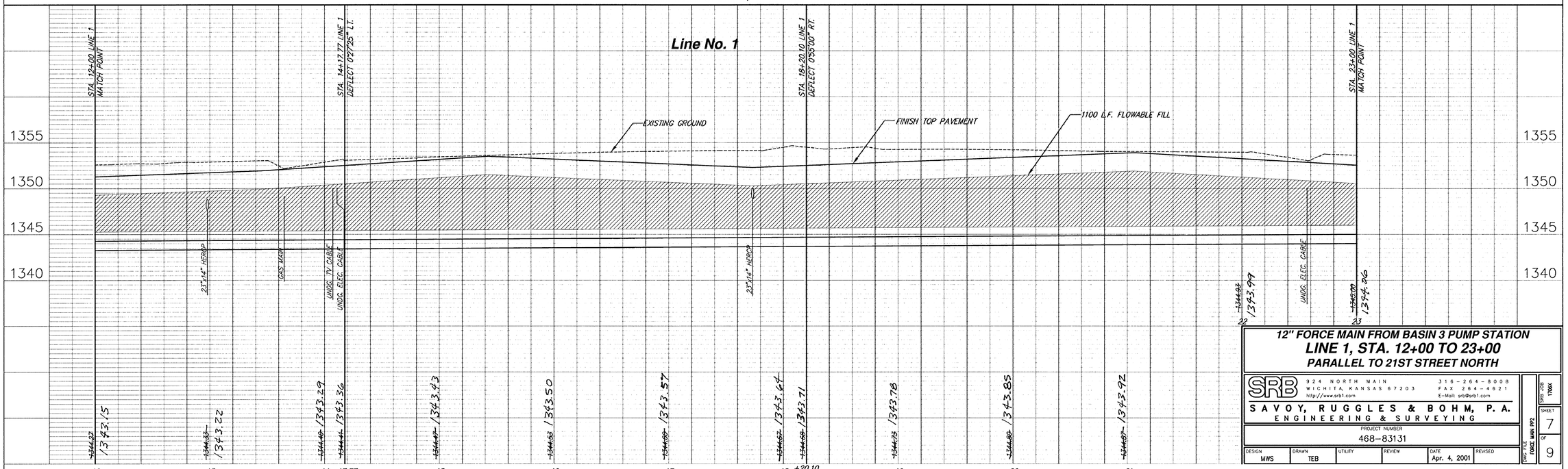

12" FORCE MAIN FROM BASIN 3 PUMP STATION
LINE 1, STA. 12+00 TO 23+00
PARALLEL TO 21ST STREET NORTH

SRB
924 NORTH MAIN
WICHITA, KANSAS 67203
http://www.srb1.com
316-264-8008
FAX 264-4621
E-Mail: srb@srb1.com
SAVOY, RUGGLES & BOHM, P.A.
ENGINEERING & SURVEYING

PROJECT NUMBER 468-83131

DESIGN	DRAWN	UTILITY	REVIEW	DATE	REVISED
MWS	TEB			Apr. 4, 2001	

DWG. FILE: FORCE MAIN PP2
SRB JOB 1760X
SHEET 7 OF 9

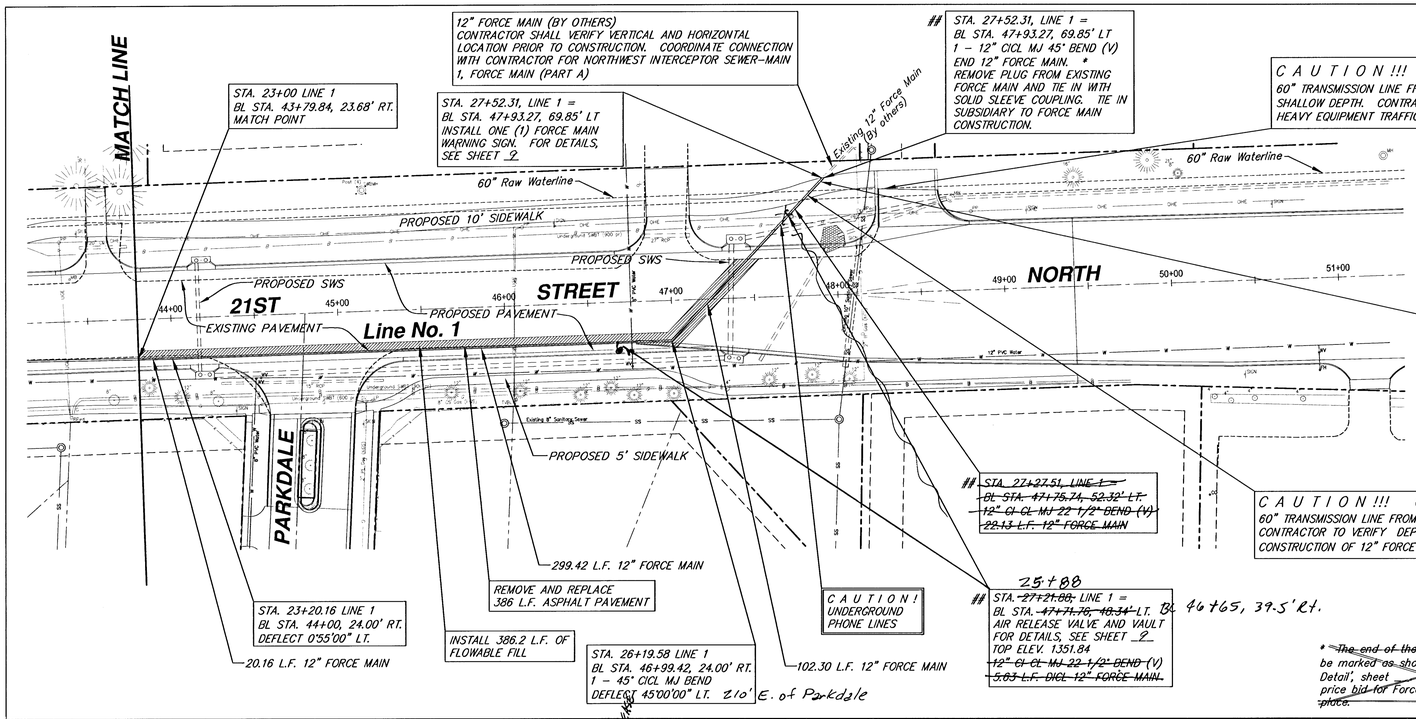

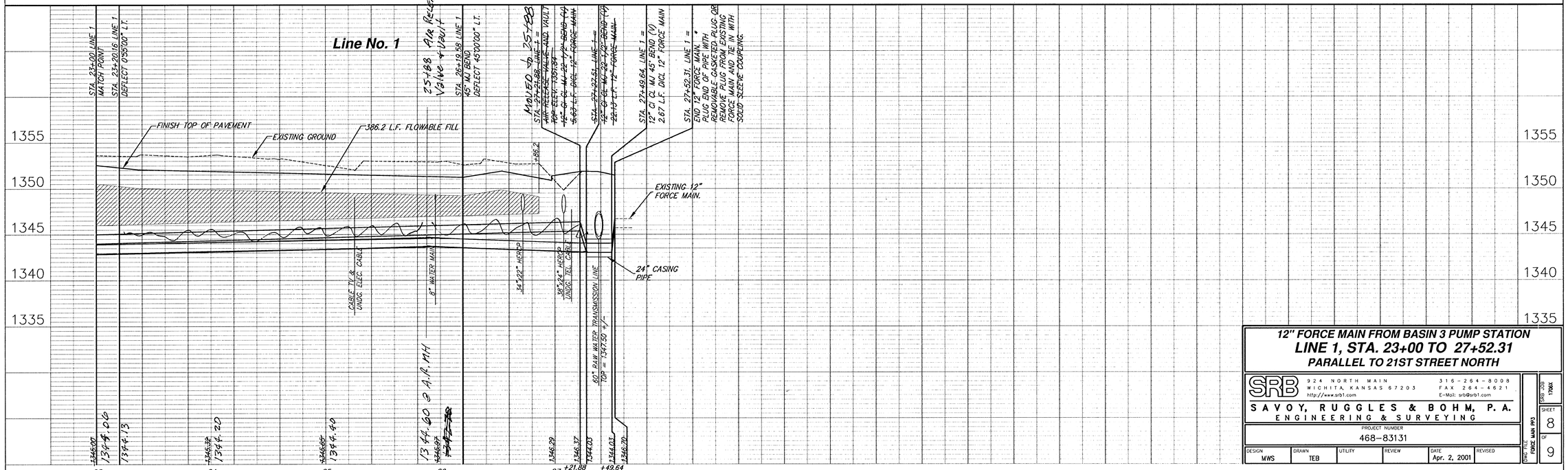

12" FORCE MAIN FROM BASIN 3 PUMP STATION
LINE 1, STA. 23+00 TO 27+52.31
PARALLEL TO 21ST STREET NORTH

SRB
924 NORTH MAIN
WICHITA KANSAS 67203
http://www.srb1.com
316-264-8008
FAX 264-4621
E-Mail: srb@srb1.com
SAVOY, RUGGLES & BOHM, P.A.
ENGINEERING & SURVEYING

PROJECT NUMBER 468-83131

DESIGN	DRAWN	UTILITY	REVIEW	DATE	REVISED
MWS	TEB			Apr. 2, 2001	

DRAWING NO. FORCE MAIN PP3
SHEET 8 OF 9
PSBS JOB 170XX

THRUST BLOCK SCHEDULE				
LINE SIZE	FITTINGS & ANGLES	'L'	'W'	'H'
12"	11 1/4°	2'-0"	1'-0"	2'-0"
12"	22 1/2°	2'-0"	1'-0"	2'-0"
12"	45°	2'-0"	1'-6"	2'-0"

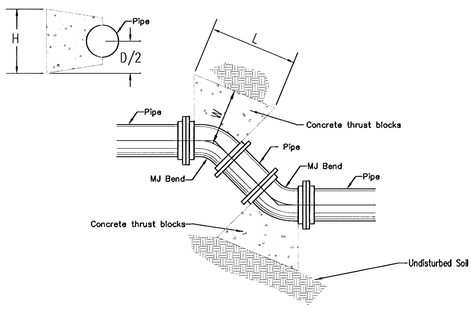

THRUST BLOCK DETAIL FOR HORIZONTAL BENDS

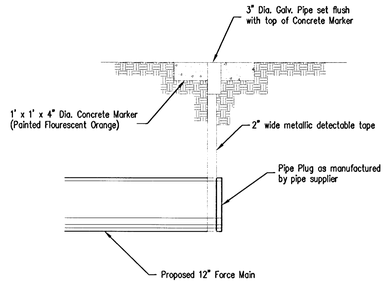

MARKER DETAIL

(PLUGGING AND MARKER SHALL BE SUBSIDIARY TO THE LUMP SUM PRICE BID FOR PIPE IN PLACE)

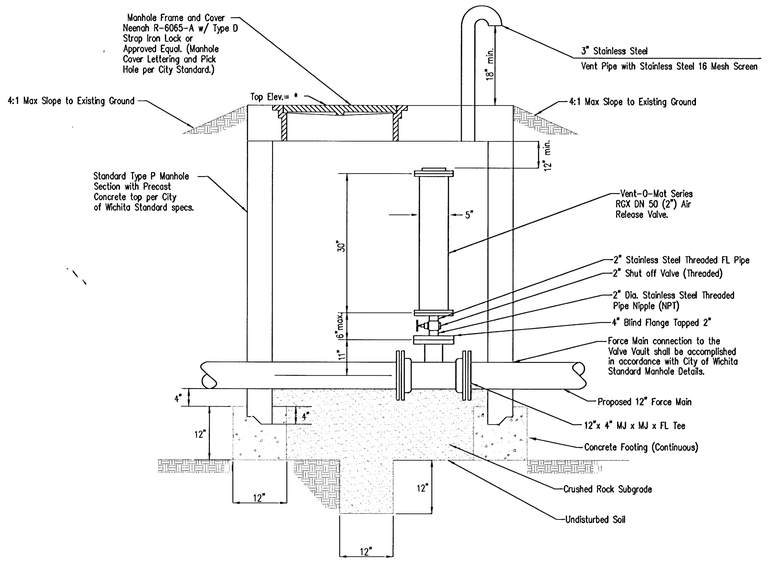

AIR RELEASE VALVE AND VAULT DETAIL

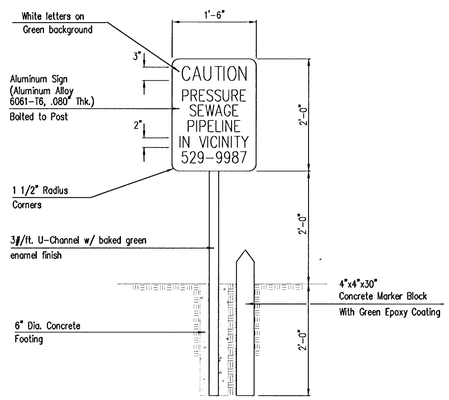

FORCE MAIN WARNING SIGN DETAIL

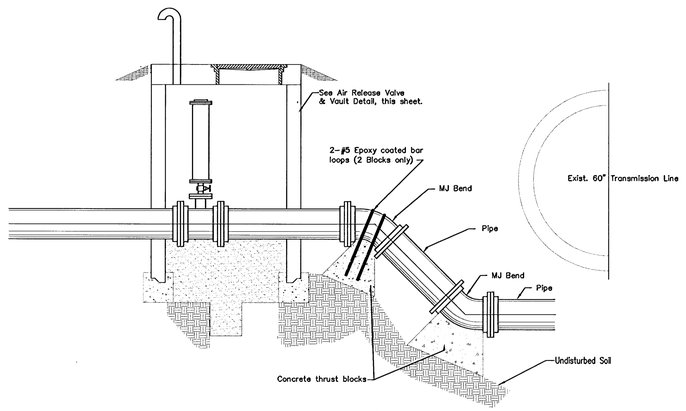

AIR RELEASE VALVE AND VAULT WITH VERTICAL BENDS

* Sta. 27+21.88, Top Elev. = 1351.84

THE CITY OF WICHITA

CITY ENGINEER'S OFFICE
CITY HALL – SEVENTH FLOOR
455 NORTH MAIN STREET
WICHITA, KANSAS 67202
(316) 268-4501
(316) 268-4114 FAX

17063/fm-details

12" FORCE MAIN

DETAILS

BASIN 3 PUMP STATION

M. E. LINDEBAK P.E. – CITY ENGINEER

PROJECT NUMBER	OCA #
468-83131	624058

DATE	
10/30/2000	SHEET 9 OF 9