WATER AND SANITARY SEWER IMPROVEMENTS FOR

135TH STREET WEST

FROM CENTRAL AVE TO 13TH STREET

CITY OF WICHITA
SEDGWICK COUNTY, KANSAS

PAUL GUNZELMAN, P.E. - CITY ENGINEER

WATER PROJECT NO. 472-2021-085756
ORIG. CODE 54250321
MUNIS NUMBER W1020
SANITARY SEWER PROJECT NO. 468-2023-031642
ORIG. CODE 53200124
MUNIS NUMBER S4001

INDEX TO DRAWINGS

SHEET NO.	DESCRIPTION
1	TITLE SHEET
2	GENERAL NOTES - SUMMARY OF QUANTITIES
3	KEY MAP AND BUBBLE MAP
4-6	WATER LINE DETAILS
7-9	WATER PLAN AND PROFILES
10-11	SANITARY SEWER DETAILS
12	SANITARY SEWER MAIN 1 PLAN AND PROFILE
13-19	TEMPORARY EROSION CONTROL & SITE RESTORATION PLAN AND DETAILS
20-26	TRAFFIC CONTROL DETAILS

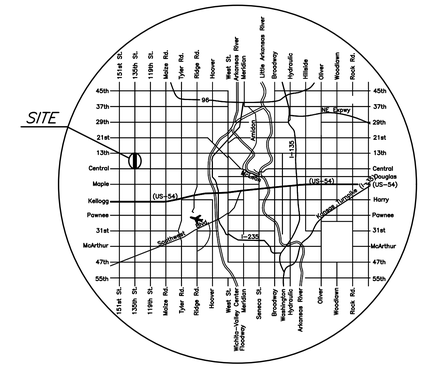

LOCATION MAP

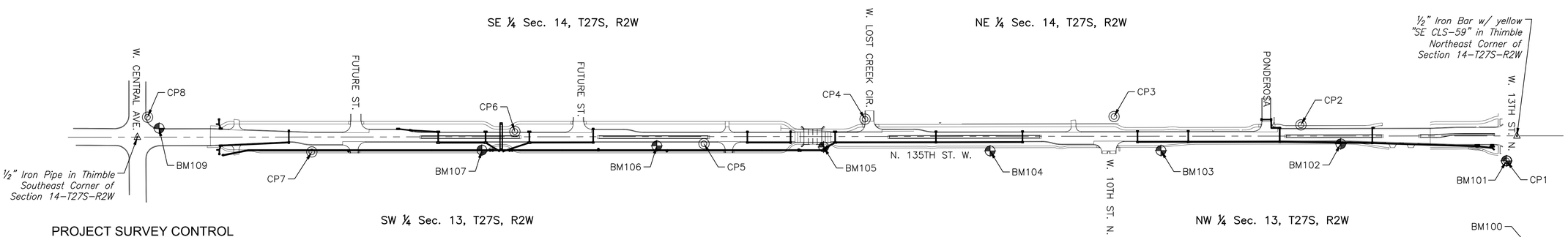

SCALE: 1" = 200'
0 200 400

PROJECT SURVEY CONTROL

BENCHMARK #100
Square cut on power pole concrete pad
Elevation=1354.61

BENCHMARK #101
Square cut on south mid-point of curb inlet
Elevation=1353.01

BENCHMARK #102
Square cut on west side of concrete base of 4'ø PP
Elevation=1353.95

BENCHMARK #103
3' t-post set 2' west of concrete wall
Elevation=1357.54

BENCHMARK #104
3' t-post set 2' west of concrete wall
Elevation=1356.47

BENCHMARK #105
City of Wichita, brass disk found
Elevation=1347.58

BENCHMARK #106
3' t-post set 6' west of Evergy box
Elevation=1353.28

BENCHMARK #107
3' t-post set in E/W fence line 15' east of corner fence post
Elevation=1350.26

BENCHMARK #109
City of Wichita, brass disk found in top of guard rail in SW corner of bridge over North Fork Calfskin Creek
Elevation=1350.41

CONTROL POINT #01
"+" cut in square west mid-point of catch basin
Elevation=1352.96

CONTROL POINT #02
½"x24" rebar w/blue cap
Elevation=1356.44

CONTROL POINT #03
½"x24" rebar w/blue cap
Elevation=1361.84

CONTROL POINT #04
Mag nail w/washer
Elevation=1351.59

CONTROL POINT #05
½"x24" rebar w/blue cap
Elevation=1353.88

CONTROL POINT #06
½"x24" rebar w/blue cap
Elevation=1350.01

CONTROL POINT #07
½"x24" rebar w/blue cap
Elevation=1353.48

CONTROL POINT #08
Mag nail w/washer
Elevation=1349.18

DATUM:
The Horizontal Datum is based on the Kansas Coordinate System of 1983, NAD83(2011), , South Zone, US Survey Foot Grid to ground. Coordinates shown have been modified to the ground using a combined adjustment factor of 1.0001200144. State Plane coordinates can be calculated by multiplying the shown values by 0.99988.
GPS Scale Point N: 0.00 E: 0.00

All elevations shown are based on the NAVD 88 vertical datum, Geoid18.

MKEC
Wichita, KS • 316-684-9600

WATER AND SANITARY SEWER IMPROVEMENTS FOR
135TH STREET WEST
FROM CENTRAL AVE TO 13TH STREET

©2024
MKEC Engineering
All Rights Reserved
www.mkec.com
These drawings and their contents, including, but not limited to, all concepts, designs, & ideas are the exclusive property of MKEC Engineering (MKEC), and may not be used or reproduced in any way without the express consent of MKEC.

TITLE SHEET

PROJECT NO.	2201010447
DATE	4/2/24
SCALE	1"=200'

DESIGNED	DRAWN	CHECKED
JRA	RAM	JRA

NO.	REVISION	DATE

SHEET NO.
1 OF 26

Sh. No. 1

PLOTTED: Tuesday, April 02, 2024 • 04:32PM
J:\PROJECTS\2022\2201010447_COW_135TH STREET FROM CENTRAL TO 13TH STREET\0 220447 CAD\SHTS\05 CIV\LW\TR\220447_WTR-SAN TITLE.DWG