City of Wichita
Sedgwick County, Kansas

Kinkaid Park 5th Addition
Gravity Sewer To Replace Lift Station No. 17

City Engineer: Mr. Mike Lindebak, P.E.

Vicinity Map
(no scale)

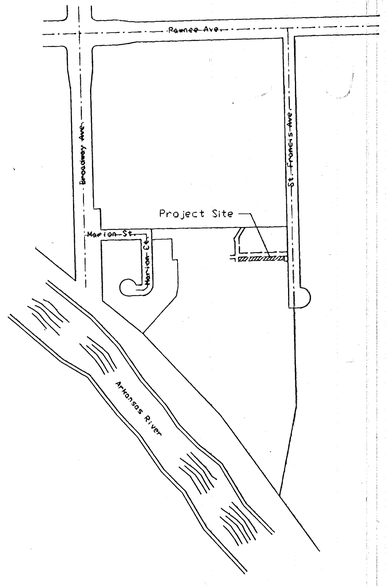

INDEX OF SHEETS:

Title Sheet	C-1
Key Map and General Notes	C-2
8" Sanitary Sewer Plan & Profile	C-3
Miscellaneous Details	C-4
Standard Type "P" Manhole Details	C-5
Manhole Frame and Cover Details	C-6

COW Project No.: 468 82526
Index Code: 620305

March, 1996

CHRISTOPHER R. YOUNG LICENSED 11315 KANSAS PROFESSIONAL ENGINEER 3-27-96

AS BUILT
RPL
1/17/02

Young & Associates, P.A.
Civil and Environmental Engineers
100 South Georgie * Derby, Kansas * 67037

FILE: USTITLE PLOT: 3-26-96 ACADVR R12

GENERAL NOTES

1. ALL ELEVATIONS SHOWN ARE CITY DATUM.
2. AT LEAST 72 HOURS PRIOR TO BEGINNING ANY EXCAVATION (EXCLUDING WEEKENDS AND HOLIDAYS), THE CONTRACTOR SHALL CONTACT THE KANSAS ONE-CALL SYSTEM, A UTILITY LOCATION SERVICE, AT (316) 687-2470 TO REQUEST THE LOCAL UTILITY COMPANIES TO LOCATE ANY EXISTING LINES WITHIN THE PROJECT AREA.
3. THE CONTRACTOR MUST NOTIFY THE FOLLOWING IN CASE OF AN EMERGENCY:

CABLEVISION	262-4270 (263-2061)
K.P.L. GAS SERVICE COMPANY	383-8650
KANSAS GAS & ELECTRIC COMPANY	383-8600
ARKLA GAS COMPANY	942-8350
SOUTHWESTERN BELL TELEPHONE COMPANY	1-571-2611
CITY OF WICHITA WATER DEPARTMENT	268-4908
CITY OF WICHITA SEWER DEPARTMENT	268-4071

4. THE CONTRACTOR TO VERIFY UTILITY LOCATIONS PRIOR TO CONSTRUCTION OF THE PROJECT.
5. EASEMENTS AND RIGHTS-OF-WAY PROVIDED BY THE OWNER FOR THE PROJECT ARE SHOWN IN THE PLANS. THE CONTRACTOR SHALL BE RESPONSIBLE FOR THE ACQUISITION OF ANY ADDITIONAL TEMPORARY CONSTRUCTION EASEMENTS OR RIGHT-OF-WAY THAT HE DESIRES TO USE IN COMPLETING THE WORK. ~~THE CONTRACTOR SHALL CONTACT MR. RAY SLUSSER @ 684-1400, BUILDERS INC. FOR ADDITIONAL WORK AREAS.~~
6. POSITIVE DRAINAGE SHALL BE PROVIDED FOR ALL AREAS ON OR NEAR SPOIL AREAS. NATURAL DRAINAGE WAYS SHALL BE MAINTAINED.
7. ANY EXCESS EXCAVATION WHICH IS TO BE WASTED, SHALL BE DISPOSED OF ON SITES PROVIDED BY THE CONTRACTOR. THESE SITES SHALL BE APPROVED BY THE ENGINEER AS TO SUITABILITY, APPEARENCE, AND SITE LOCATION, AND SHALL BE DISPOSED OF IN ACCORDANCE WITH THE PROVISIONS OF THE KANSAS SOLID WASTE MANAGEMENT STATUTES AND REGULATIONS (KSA 65-3401, KAR 28-29-1 ET SEQ.)
8. THE CONTRACTOR WILL BE REQUIRED TO WORK AROUND EXISTING UTILITIES WITHIN THE RIGHT-OF-WAY WHICH DO NOT CONFLICT WITH THE PROPOSED CONSTRUCTION.
9. THE CONTRACTOR SHALL PERFORM TRENCHING OPERATIONS AT LEAST 50 FEET AHEAD OF PIPE LAYING. IF ALTERATIONS TO THE SEWER LINE ARE REQUIRED BECAUSE OF UTILITY CONFLICTS, THE CONTRACTOR SHALL NOTIFY AND PROVIDE THE ENGINEER WITH THE EXACT LOCATION OF THE CONFICT SO ANY PLAN MODIFICATIONS MAY BE MADE.
10. EXISTING UTILITIES AND THEIR LOCATION, AS SHOWN ON THE PLANS, REPRESENT THE BEST AVAILABLE INFORMATION. IT SHOULD BE NOTED THAT OTHER BURIED LINES AND CABLE MAY EXIST WHICH ARE NOT SHOWN ON THESE PLANS. THE CONTRACTOR SHALL EXERCISE EXTREME CAUTION DURING TRENCHING OPERATIONS TO AVOID DAMAGING THESE LINES AND CABLES. ANY UTILITIES DAMAGED SHALL BE REPLACED OR REPAIRED IMMEDIATELY AS DIRECTED BY THE ENGINEER AT THE CONTRACTOR'S EXPENSE. THE CONTRACTOR SHALL PROTECT FROM DAMAGE AND SUPPORT EXISTING UTILITIES THROUGH CONSTRUCTION AS APPROVED BY THE UTILITY OWNER AND THE ENGINEER AT THE CONTRACTOR'S EXPENSE.
11. THE CONTRACTOR SHALL BE RESPONSIBLE FOR PRESERVING EXISTING PROPERTY IRONS AND RIGHT-OF-WAY MONUMENTS. THE CONTRACTOR SHALL BE REQUIRED TO RE-ESTABLISH ANY PROPERTY IRONS OR RIGHT-OF-WAY MONUMENTS WHICH ARE DAMAGED OR DESTROYED BY HIS CONSTRUCTION OPERATIONS. SUCH IRONS OR MONUMENTS SHALL BE RE-ESTABLISHED BY A LICENSED LAND SURVEYOR IN ACCORDANCE WITH STATE LAWS.
12. THE PIPELINE SHALL BE INSTALLED IN ACCORDANCE WITH CITY OF WICHITA STANDARD SPECIFICATIONS.
13. THE CONTRACTOR SHALL NOT START WORK ON THE PROJECT UNTIL THE PROJECT INSPECTOR IS ASSIGNED TO THE PROJECT AND IS PRESENT ON THE SITE. ANY WORK PERFORMED WITHOUT INSPECTION IS SUBJECT TO BE UNCOVERED FOR INSPECTION.
14. ~~THE CONTRACTOR SHALL NOTIFY BUILDERS INC, MR. RAY SLUSSER @ 684-1400 7 DAYS PRIOR TO MOBILIZING ON SITE. ADDITIONAL NOTIFICATION SHALL BE MADE 48 HOURS IN ADVANCE OF ANY CONSTRUCTION ACTIVITY.~~

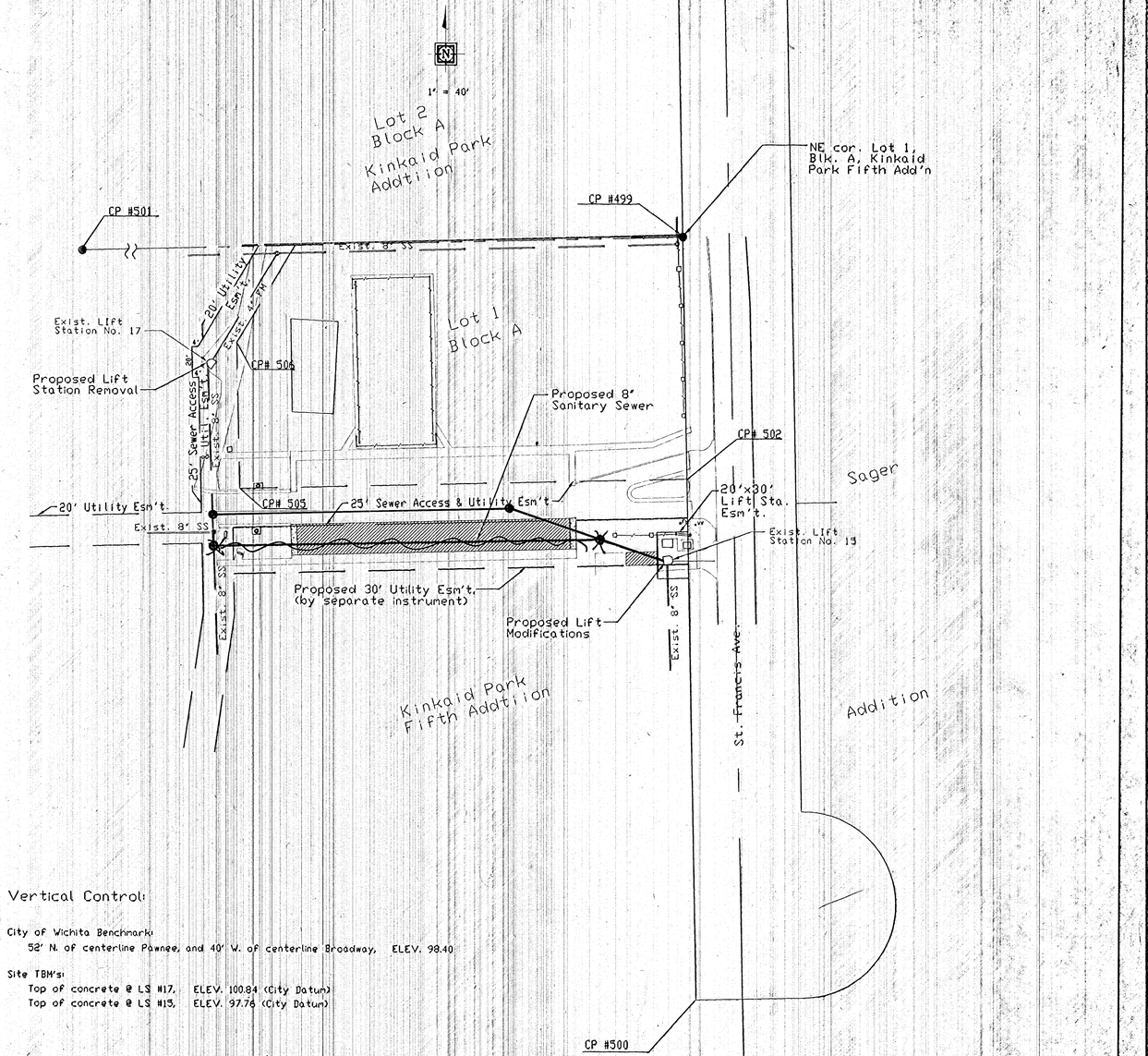

Horizontal Control:

Control Point Number	Northing	Easting	Description
499	5119.824	4928.516	NE Cor Lot 1, Blk. A, Kinkaid Park Fifth Addition
500	4628.365	4939.442	SE Cor St. Francis Ave. ROW
501	5098.387	4075.885	SE Cor Lot 1, Blk. A, Kinkaid Park Fifth Addition
502	4963.862	4931.983	NE Cor 25' Sewer Access and Utility Easement
505	4956.605	4643.304	NW Cor 25' Sewer Access and Utility Easement
506	5050.715	4640.966	NE Cor 25' Sewer Access and Utility Easement
516	4929.871	4932.739	NE Cor 20'x30' Lift Station Easement
517	4899.878	4933.406	SE Cor 20'x30' Lift Station Easement
518	4899.434	4913.411	SW Cor 20'x30' Lift Station Easement
519	4929.426	4912.744	NW Cor 20'x30' Lift Station Easement

Vertical Control:

City of Wichita Benchmark:
52' N. of centerline Pawnee, and 40' W. of centerline Broadway, ELEV. 98.40

Site TBM's:
Top of concrete @ LS #17, ELEV. 100.84 (City Datum)
Top of concrete @ LS #13, ELEV. 97.76 (City Datum)

Young & Associates, P.A.
Civil and Environmental Engineers

Revisions:

City of Wichita
Sedgwick County, Kansas

Key Map & General Notes

Lift Station No. 17 Replacement
Kinkaid Park 5th Addition

Design By: CRY	Drawn By: RTC	Scale: 1"=40'
Proj. No.: 98-018-001		Sheet No: C-2

FILE: 01SHEETONE PLOT: 3-26-98 ACAD R12(WIN)

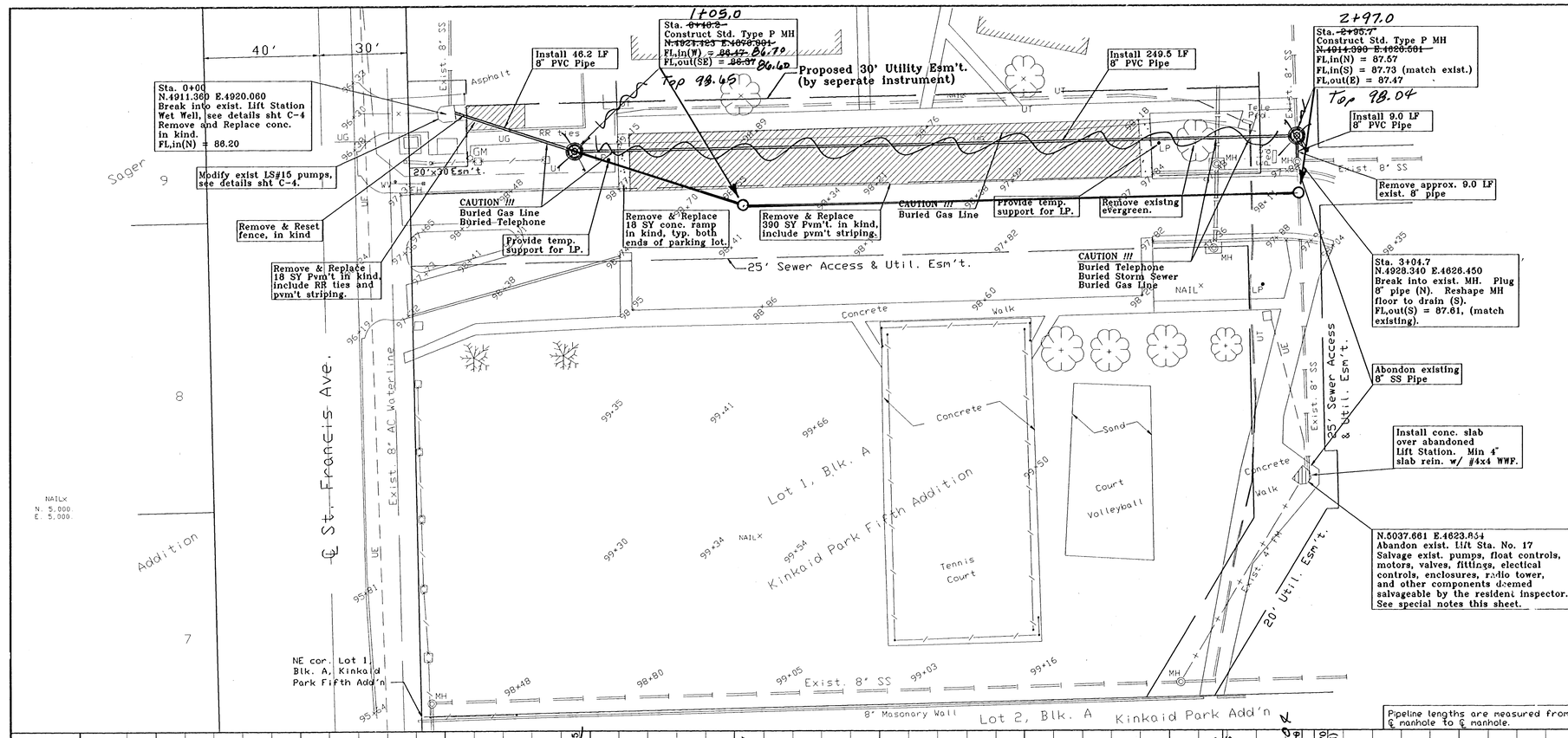

SPECIAL NOTES:

1. The Contractor shall clean all salvaged items, and deliver them to the Sewer Treatment Contact Mr. James Tush @ 529-9900.
2. The Contractor shall maintain wastewater flow during construction. Temporary flow diversions shall be approved by the Engineer.
3. Vehicular traffic access to the apartment complex shall be maintained at all times. ~~The Contractor shall notify Mr. Ray Slusser, Builders Const. Inc., 48 hours in advance of construction @ 316-684-1400.~~

Pipeline lengths are measured from ℄ manhole to ℄ manhole.

Benchmark Datum:
City of Wichita Benchmark:
52' N. of centerline Pawnee, and 40' W. of centerline Broadway, ELEV. 98.40
Site TBM's:
Top of concrete @ LS #17, ELEV. 100.84 (City Datum)
Top of concrete @ LS #15, ELEV. 97.76 (City Datum)

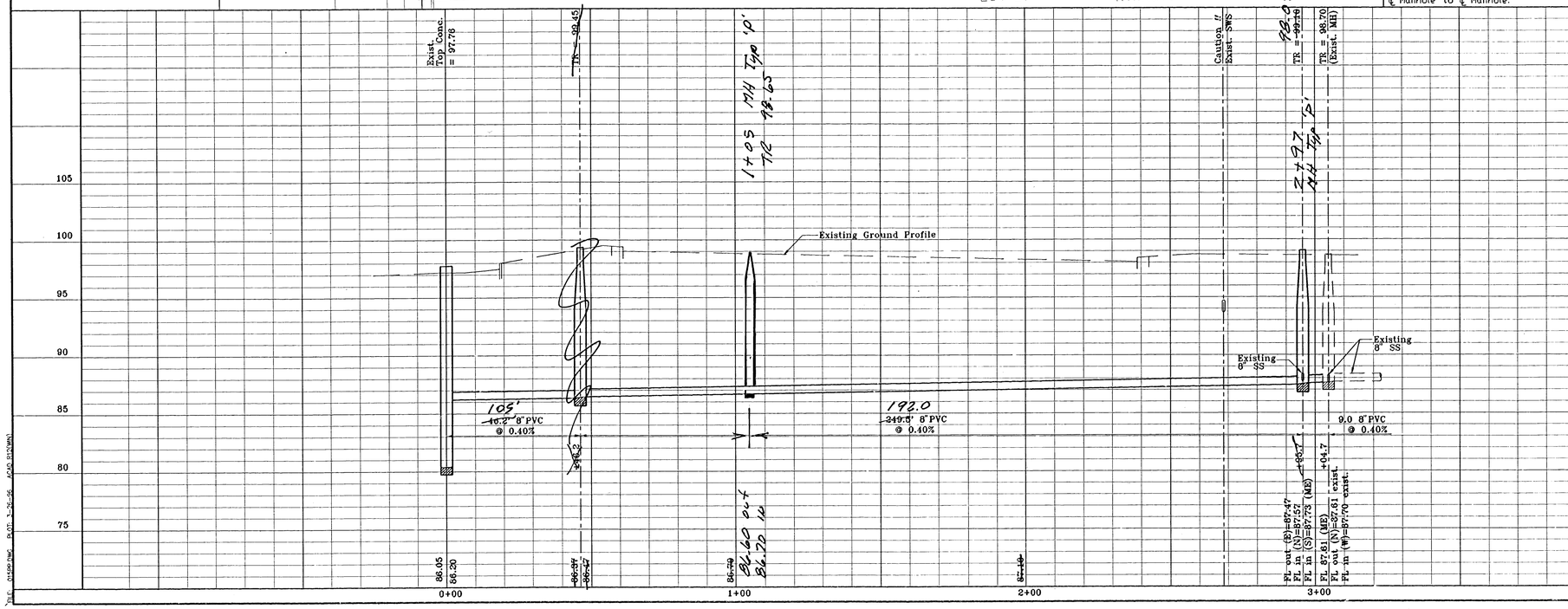

Young & Associates, P.A.
Civil and Environmental Engineers
100 S. Georgie, Derby Kansas, 67037 (316) 788-2552
Design By: CRY | Project No. 95-015-002
Drawn By: KYC | Date: Nov. 1995

City of Wichita
Sedgwick County, Kansas
8" Gravity Line
Plan & Profile
Lift Station No.17 Replacement
Kinkaid Park Fifth Addition

Sheet No. C-3

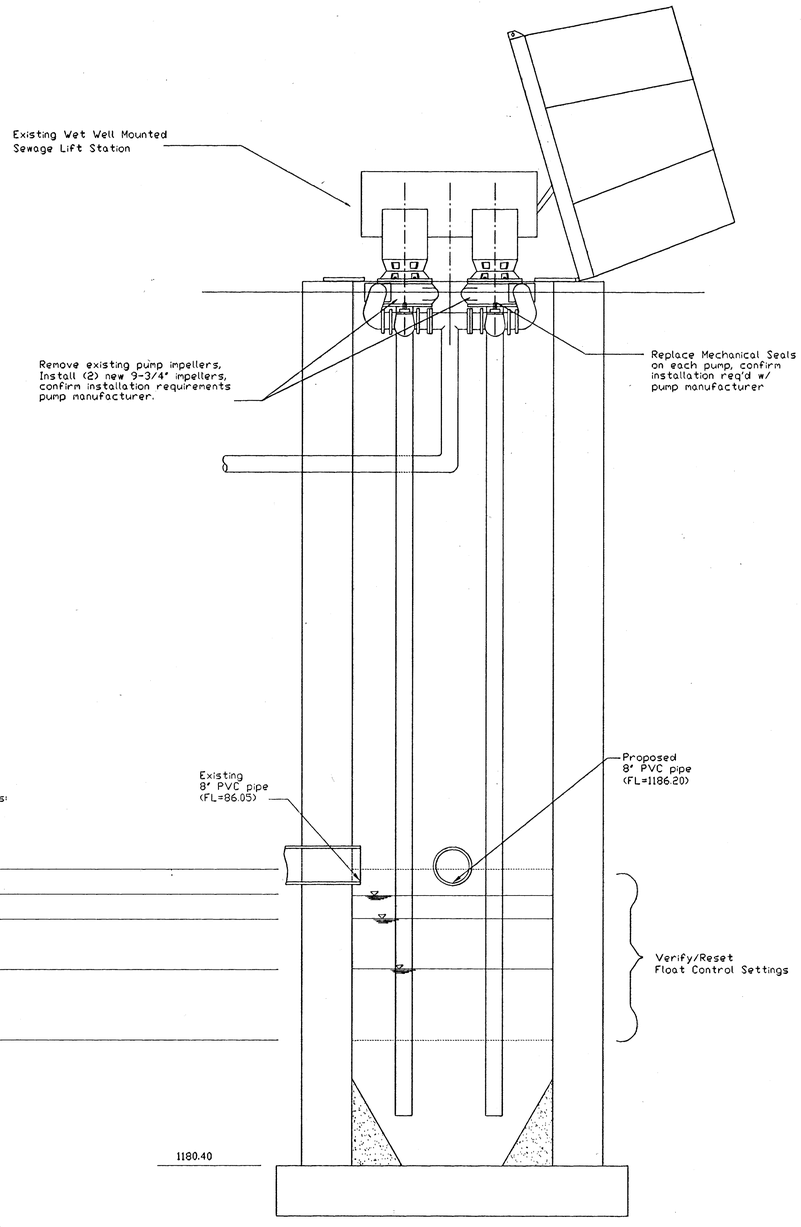

Lift Station No. 15

(Typical Section)

3/4" = 1'-0"

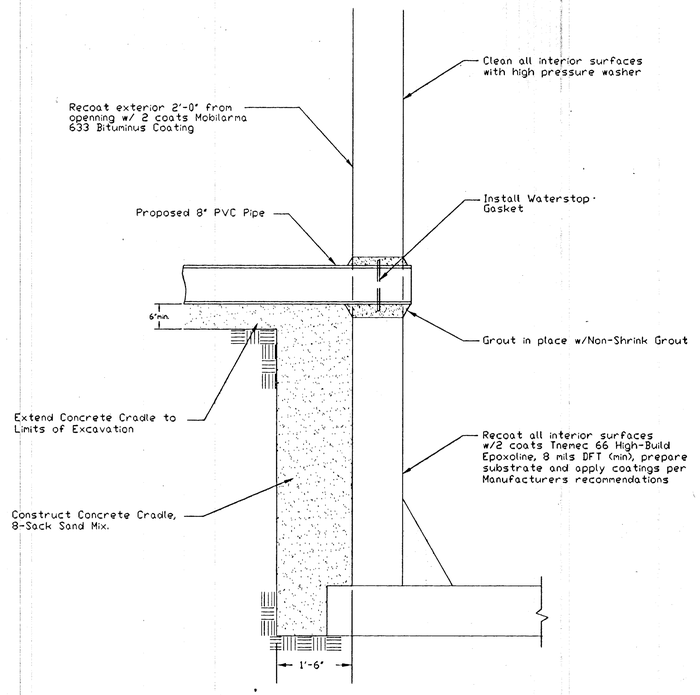

8" Pipe Connection Detail

(Typical Section)

3/4" = 1'-0"

FILE: 015DETAILS.dwg PLOT: 3-26-96 ACAD R12(VJN)

Revisions:

City of Wichita
Sedgwick County, Kansas

Miscellaneos Details

Lift Station No. 17 Replacement
Kinkaid Park 5th Addition

Young & Associates, P.A.
Civil and Environmental Engineers

Design By: CRY	Drawn By: RTC	Scale: as noted
Proj. No. 96-016-001		Sheet No. C-4

SEWER APPURTENANCES DETAILS

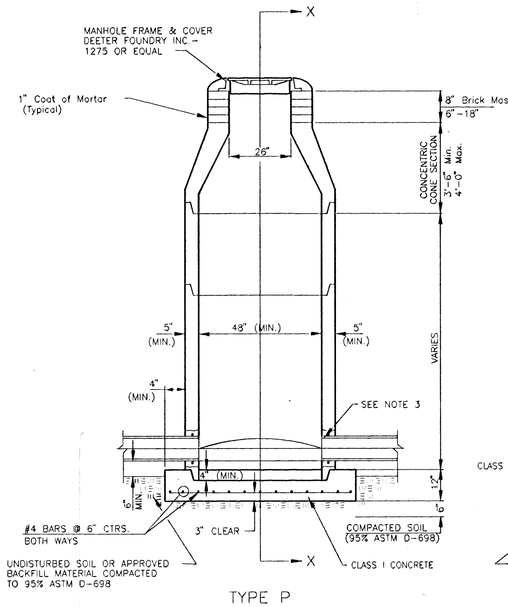

TYPE P
STANDARD MANHOLE

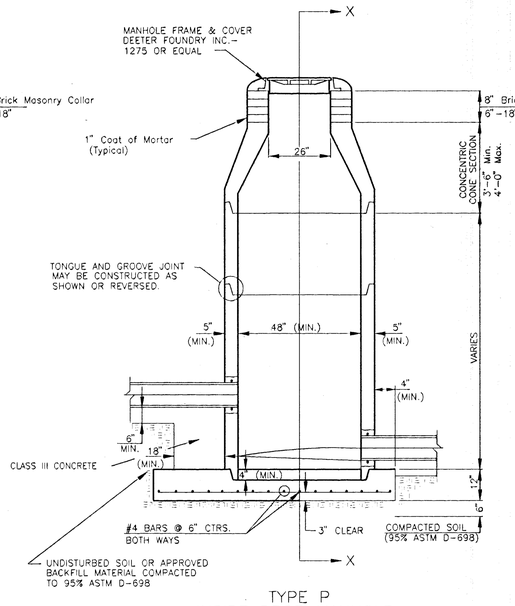

TYPE P
INSIDE DROP MANHOLE

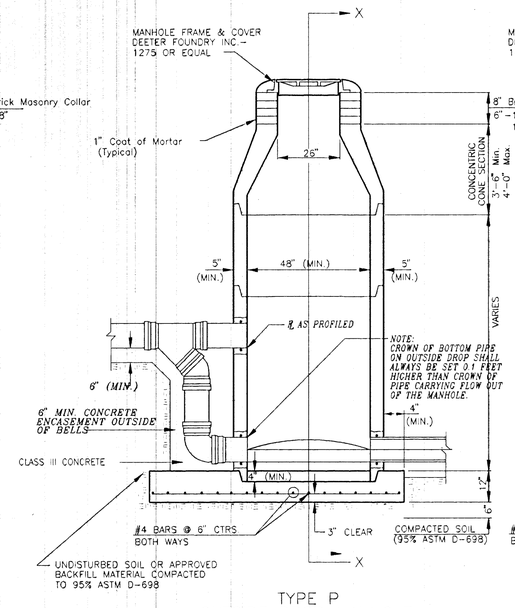

TYPE P
OUTSIDE DROP MANHOLE

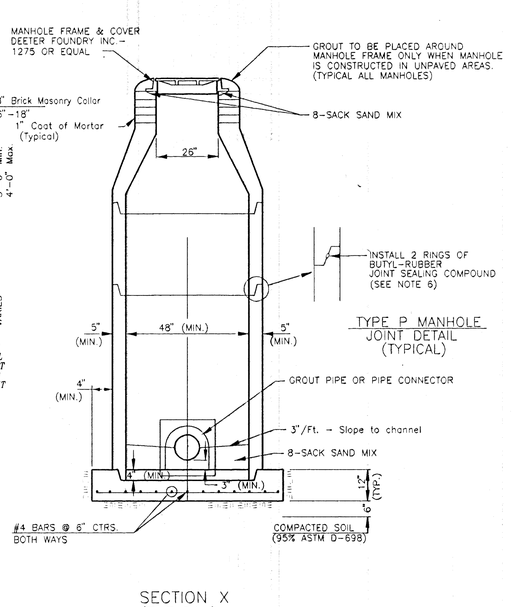

TYPE P MANHOLE
JOINT DETAIL
(TYPICAL)

SECTION X
(TYPICAL)

GENERAL NOTES

1. ALL PRECAST CONCRETE MANHOLE SECTIONS SHALL CONFORM TO THE LATEST REVISIONS OF A.S.T.M. C478 AS MODIFIED BY THE SPECIFICATIONS.
2. NON-SHRINK GROUT SHALL BE NON-METALLIC TYPE.
3. APPROVED FLEXIBLE WATERSTOP GASKETS SHALL BE INSTALLED TO JOIN THE SEWER TO THE MANHOLE WALL WHEN A.B.S. COMPOSITE PIPE OR P.V.C. PIPE IS USED. FOR OTHER TYPES OF PIPE THE SEWER SHALL BE GROUTED IN PLACE WITH NON-SHRINK GROUT. THE SEWER PIPE SHALL BE SUPPORTED WITH CONCRETE ENCASEMENT A MINIMUM OF 3 FEET FROM THE MANHOLE WALL AND TO THE FIRST JOINT FOR V.C.P. SUCH THAT THE JOINT REMAINS FLEXIBLE.
4. ALL INSIDE SURFACES OF THE CONCRETE MANHOLE WHICH WOULD BE EXPOSED TO SEWER GAS SHALL BE COATED WITH 2 COATS TNEMEC SERIES 66 HI-BUILD EPOXOLINE, DRY THICKNESS OF 8 MILS (MIN.)
5. EXTERIOR MANHOLE WALLS SHALL BE COATED WITH 1 COAT OF HEAVY DUTY BLACK MASTIC. DRY THICKNESS OF 12 MILS (MIN.) SEE SPECIFICATIONS.
6. JOINT SEALING COMPOUND SHALL BE KENT SEAL NO. 2, K.T. SNYDER "RAMNECK", OR APPROVED EQUAL.
7. PRECAST MANHOLES SHALL BE SET AT LEAST 4 INCHES INTO THE MANHOLE BASE.
8. TOP OF MANHOLE FLOOR SLAB SHALL BE AT LEAST 3 INCHES BELOW THE FLOW LINE OF THE OUTLET PIPE TO INSURE SUFFICIENT MIMMUM THICKNESS OF SHAPED INVERT.
9. LIFTING HOLES SHALL BE FILLED WITH NON-SHRINK GROUT AND THE INTERIOR SURFACE COATED AS SPECIFIED.
10. MORTAR USED IN MASONRY CONSTRUCTION SHALL CONTAIN 8 SACKS OF CEMENT PER CUBIC YARD. CONCRETE USED IN MANHOLE BASES SHALL CONFORM TO THE REQUIREMENTS OF CONCRETE AS SPECIFIED IN SECTION 03010 OF THE SPECIFICATIONS. MORTAR SHALL BE PLACED AROUND THE MANHOLE RING AS SHOWN ON THE DRAWINGS WHEN MANHOLES ARE CONSTRUCTED IN UNPAVED AREAS. MANHOLES CONSTRUCTED WHERE PIPE SIZES ARE SMALLER THAN 24" SHALL HAVE AN INSIDE DIAMETER OF 4'. MANHOLES CONSTRUCTED WHERE PIPE SIZES ARE 24" OR LARGER SHALL HAVE AN INSIDE DIAMETER OF 5'. COMPLETED MANHOLE SHALL BE WITHOUT LEAKS AND WATER TIGHT.
11. REINFORCING STEEL SHALL BE INSTALLED IN THE MANHOLE BASES AND SHALL CONSIST OF NO. 4 BARS PLACED ON 6' CENTERS IN BOTH DIRECTIONS. THE MANHOLE BASE REINFORCEMENT SHALL BE PLACED AT LEAST 3" ABOVE THE BOTTOM OF THE MANHOLE BASE. ALL COSTS FOR FURNISHING AND INSTALLING REINFORCING STEEL SHALL BE INCLUDED IN THE UNIT PRICE BID FOR THE MANHOLE.
12. OPENINGS SHALL BE CUT INTO THE MANHOLE WALL WHEN OUTSIDE DROPS ARE CONSTRUCTED ON EXISTING MANHOLES. SUCH OPENINGS CUT INTO EXISTING MANHOLES SHALL BE AS SMALL AS PRACTICAL TO FACILITATE INSTALLING AND GROUTING THE NEW PIPE IN PLACE. WATERSTOP GASKETS SHALL BE USED WITH P.V.C. AND A.B.S. COMPOSITE PIPE. THE NEW PIPE SHALL BE GROUTED INTO THE OPENING USING AN APPROVED NONSHRINK GROUT FOR THE FULL MANHOLE WALL THICKNESS. THE EXTERIOR OF THE COMPLETED CONNECTION SHALL BE SEALED WITH AN APPROVED BITUMINOUS COATING SUCH THAT THE CONNECTION WILL BE WATER TIGHT. FLOOR OF MANHOLE SHALL BE MODIFIED TO FORM NEW FLOW CHANNEL FOR THE NEW CONNECTION AS INDICATED BY THE DRAWING. THIS WORK, INCLUDING MODIFICATION OF MANHOLE FLOOR, SHALL BE PAID FOR AT THE UNIT PRICE BID FOR OUTSIDE DROP STACK CONSTRUCTED ON EXISTING MANHOLE.
13. THE FLOORS OF ALL MANHOLES SHALL BE SHAPED WITH FLOW CHANNELS SUCH THAT THE MANHOLES WILL BE SELF CLEANING AND FREE OF AREAS WHERE SOLIDS COULD BE DEPOSITED AS SEWAGE FLOWS THROUGH THE MANHOLE FROM ALL INLET PIPES TO THE OUTLET PIPE. FLOW CHANNELS SHALL BE FORMED TO MATCH THE BOTTOM HALVES OF THE INFLOWING PIPES AND THE OUTFLOWING PIPE AS SHOWN BY THE DRAWINGS EXCEPT FOR INSIDE DROP MANHOLES. FLOW CHANNELS FOR INSIDE DROP MANHOLES SHALL BE CONSTRUCTED AS INDICATED BY THE DRAWING. MANHOLE FLOORS SHALL HAVE SLOPES OF 3 INCHES PER FOOT IN THE AREAS OUTSIDE OF THE FLOW CHANNELS SLOPED TOWARD THE FLOW CHANNELS. PIPES LAID THROUGH MANHOLES SHALL HAVE THE TOP HALF REMOVED TO NEAT LINES FOR THE FULL INSIDE DIAMETER OF THE MANHOLE. MANHOLE FLOORS SHALL THEN BE SHAPED AROUND THE BOTTOM HALF OF THE PIPE WHICH FORMS THE FLOW CHANNEL.
14. PIPES INSTALLED WITHIN THE EXCAVATION MADE FOR THE MANHOLE SHALL BE CRADLED WITH CONCRETE TO THE LIMITS OF THE MANHOLE EXCAVATION. WHEN CLAY PIPE IS USED, THE CRADLE SHALL EXTEND TO THE FIRST JOINT OUTSIDE THE MANHOLE. THE CRADLE SHALL BE TERMINATED AT THE CLAY PIPE JOINT IN A MANNER WHICH WILL MAINTAIN THE FLEXIBILITY OF THE JOINT. COST OF CRADLE WITHIN MANHOLE EXCAVATION OR TO CLAY PIPE JOINTS ADJACENT TO MANHOLE SHALL BE INCLUDED IN THE UNIT PRICE BID FOR THE MANHOLE.
15. MANHOLE COVER CASTINGS AND MANHOLE FRAME CASTINGS SHALL CONFORM TO THE REQUIREMENTS AS INDICATED IN THE STANDARD SPECIFICATIONS AND AS SHOWN ON THIS SHEET. THE COVER SHALL BE IDENTIFIED WITH REGARDS TO OWNERSHIP USING LETTERS AT LEAST 1" IN HEIGHT. THIS IDENTIFICATION SHALL BE "CITY OF DERBY SANITARY SEWER".
16. THE VERTICAL DROP IN INSIDE DROP MANHOLES SHALL NOT EXCEED 2 FEET. THE CROWNS OF INFLOWING PIPES SHALL NEVER BE SET LOWER THAN THE CROWN OF THE OUTFLOWING PIPE.
17. STANDARD MANHOLES, OUTSIDE DROP MANHOLES, AND INSIDE DROP MANHOLES SHALL BE BID AS STANDARD MANHOLES FOR THE TYPE AND DIAMETER INDICATED. ALL MANHOLE DIAMETERS WILL BE 4' UNLESS INDICATED OTHERWISE.
18. A BRICK MASONRY COLLAR SHALL BE INSTALLED BETWEEN THE CAST IRON FRAME AND THE CONCENTRIC CONE. THE COLLAR WILL HAVE 8" WALLS AND A VERTICAL HEIGHT OF 6" MINIMUM AND 18" MAXIMUM. A 1" COAT OF MORTAR WILL BE PLASTERED ON THE OUTSIDE OF THE COLLAR. THE USE OF PRE-CAST CONCRETE SPACERS FOR MANHOLE TOP ADJUSTMENT IS ALSO ALLOWED.
19. THE USE OF PRECAST CONCRETE BASE SECTIONS WILL BE ALLOWED.

Revisions:

City of Wichita
Sedgwick County, Kansas

Sanitary Sewer Manhole Details

Lift Station No. 17 Replacement
Kinkaid Park 5th Addition

Young & Associates, P.A.
Civil and Environmental Engineers
130 S. Cleveland, Derby, Kansas, 67037 (316) 788-1950

Design By: CRY	Drawn By: JNJ	Scale: none
Proj. No. 96-016-001		Sheet No. C-4

MANHOLE FRAME AND COVER DETAIL

MANHOLE COVER
Weight = 180 Lbs.

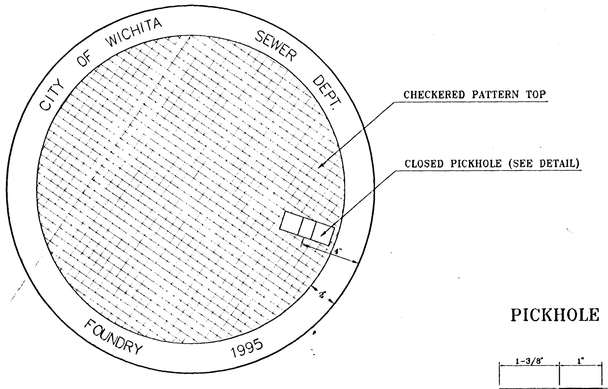

TOP VIEW

PICKHOLE DETAIL

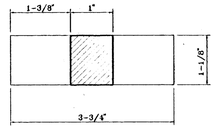

TOP VIEW

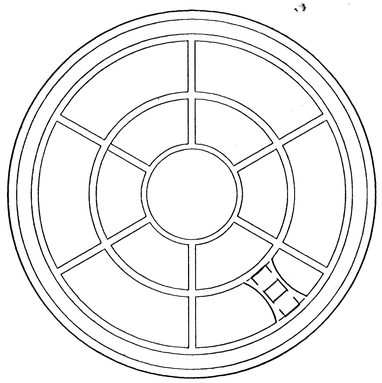

BOTTOM VIEW

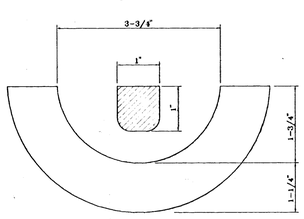

SECTION VIEW

MANHOLE FRAME
Weight = 240 Lbs.

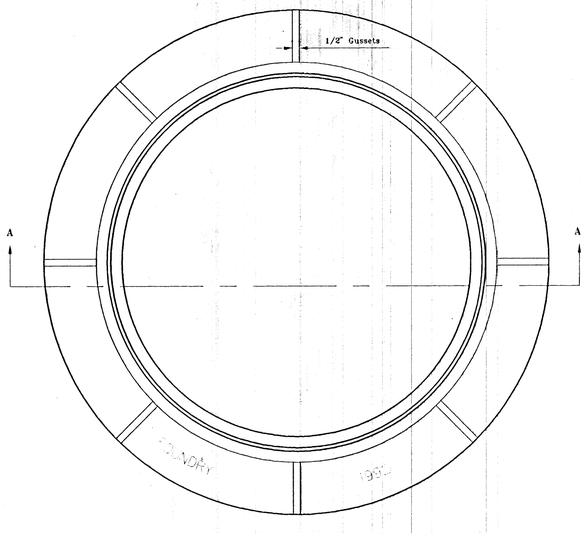

TOP VIEW

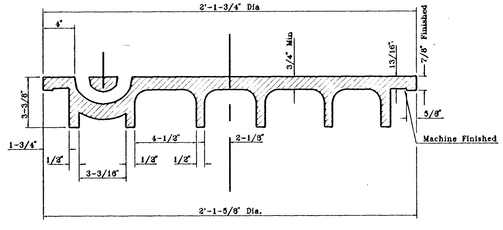

SECTION VIEW

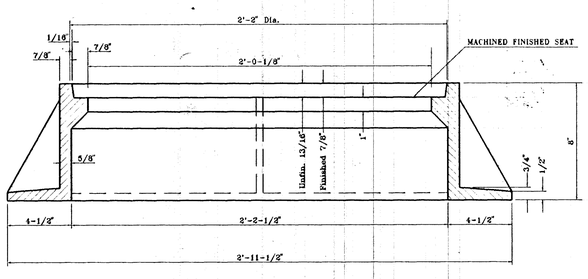

SECTION A-A

GENERAL NOTES

MANHOLE CASTINGS SHALL BE MANUFACTURED USING GOOD QUALITY GRAY IRON CONFORMING TO CLASS 30 OF A.S.T.M. DESIGNATION A-48. DIMENSIONS AND WEIGHTS SHOWN ON THE DETAILED DRAWINGS SHALL BE CONSIDERED AS MINIMUM REQUIREMENTS AND ANY DEVIATIONS FROM THE DIMENSIONS SHOWN MUST BE SPECIFICALLY APPROVED. THE FINISHED CASTINGS SHALL BE OF UNIFORM QUALITY, FREE FROM BLOWHOLES, POROSITY, HARD SPOTS, SHRINKAGE DISTORTIONS OR OTHER DEFECTS.

MANHOLE CASTINGS SHALL BE COATED WITH AN ASPHALT PAINT RESULTING IN A SMOOTH, TOUGH AND TENACIOUS COATING WHICH IS NOT BRITTLE OR TACKY.

MANHOLE CASTINGS SHALL BE MANUFACTURED SUCH THAT A COVER MANUFACTURED BY ANY ONE FOUNDARY WILL FIT INTERCHANGEABLY INTO A FRAME MANUFACTURED BY ANOTHER FOUNDRY AND STILL MEET ALLOWABLE CLEARANCES AND NON-ROCKING REQUIREMENTS. THIS WILL REQUIRE MANUFACTURING OF THE MATCHING FACES ON THE COVER AND THE FRAME TO CLOSE TOLERANCES.

THE OUTSIDE CIRCUMFERENCE OF THE VERTICAL FACE OF THE COVER AND THE INSIDE CIRCUMFERENCE OF THE VERTICAL FACE IN THE FRAME RECESS SHALL BE MANUFACTURED TO TOLERANCES SUCH THAT THE CLEARANCE BETWEEN THE COVER AND FRAME WILL NOT EXCEED 1/8" AT ANY POINT AROUND THE CIRCUMFERENCE OF THE COVER. THE SEATING SURFACES BETWEEN THE COVER AND FRAME SHALL BE MACHINED SUCH AS THESE SURFACES SHALL MAKE FULL CONTACT FOR THEIR FULL CIRCUMFERENCE TO PRECLUDE THE COVER FROM ROCKING IN THE FRAME.

THE MANHOLE FRAME AND COVER SHALL BE MARKED WITH LETTERING INDICATING THE NAME OF THE MANUFACTURER AND THE YEAR WHEN THE COVER OR FRAME WAS CAST. THE COVER SHALL BE FURTHER IDENTIFIED WITH REGARDS TO OWNERSHIP USING LETTERS AT LEAST 1 INCH IN HEIGHT. THIS IDENTIFICATION SHALL BE "CITY OF WICHITA SEWER DEPARTMENT". THE WORD DEPARTMENT MAY BE ABBREVIATED. THE TEXTURE OF THE TOP SURFACE OF THE COVER SHALL BE MANUFACTURED IN A CHECKERED PATTERN DESIGN AS INDICATED ON THE DRAWINGS. SMOOTH BLOCKOUTS SHALL BE UTILIZED TO HIGHLIGHT THE LETTERING ON THE COVER SURFACE. THE TOTAL AREA OF SMOOTH SURFACE BLOCKOUT SHALL NOT EXCEED THE AREA AS INDICATED ON THE DRAWING. POSITIONING OF SMOOTH BLOCKOUTS AND LETTERING MAY VARY FROM THAT SHOWN ON THE DETAILED DRAWING.

Revisions:

City of Wichita
Sedgwick County, Kansas

Manhole Frame & Cover

Lift Station No. 17 Replacement
Kirkpatrick 5th Addition

Young & Associates, P.A.
Civil and Environmental Engineers

Design By: CRY	Drawn By: JNJ	Scale: none
Proj. No. 96-015-001		Sheet No. C-6

8-1-01-AT