SANITARY SEWER IMPROVEMENTS
RECONSTRUCTION OF PART OF SANITARY SEWER NO. 22
FROM SEWAGE TREATMENT PLANT NO. 1 TO NORTH OF PAWNEE
CITY OF WICHITA, KANSAS
MICHAEL E. LINDEBAK, P.E. - CITY ENGINEER
PROJECT NO. 468-82834
OCA #623322

GENERAL NOTES

1. Contractor will be required to provide a minimum advance notice of twenty-four (24) hours to utility companies prior to starting any excavation as follows:

Kansas One-Call	687-2470

2. The Contractor must notify the following in case of an emergency:

Cablevision	262-0661
Kansas Gas Service	383-8600
KGE	383-8600
Peoples Natural Gas Company	1-800-303-0357
Southwestern Bell Telephone Company	1-800-286-8313
City of Wichita Water Department	262-6000
City of Wichita Sewer Maintenance	262-6000

3. Contractor shall not start work on the project until the project inspector is assigned to the project and is present on the site. Any work done without inspection will be required to be uncovered for inspection.

4. Rubble from the removal of miscellaneous structures and excess excavation which is to be wasted shall be disposed of on sites to be provided by the Contractor. These sites shall be approved by the Engineer as to suitability, appearance and site location. Locations that, in the opinion of the Engineer, will leave an unsightly appearance will not be approved.

5. All disposal sites must be approved by the Kansas Department of Health and Environment. Material either stockpiled or disposed of in a flood plain would require a Kansas State Board of Agriculture permit. Any material dumped in waters of the United States or wetlands is subject to U.S. Corps of Engineers permitting regulations. Any material buried or stockpiled beyond approved construction limits would require additional archeological investigations unless buried in a previously approved borrow location.

6. Trees and shrubs in public right-of-way which are in direct conflict with proposed new construction shall be removed by the Contractor with the Engineer's approval. Trees and shrubs which are not in direct conflict with proposed new construction shall be saved and protected from damage.

7. The Contractor shall be responsible for preserving property irons. The Contractor will be required to re-establish any property irons which are damaged or destroyed by his construction operations. Such irons shall be re-established by a licensed land surveyor in accordance with state laws.

8. The Contractor shall be responsible for maintaining continuous flow of sewage through construction. Contractor's proposed method for maintaining sewage flow shall be approved by the Engineer. Cost of maintaing flow of sewage through construction will not be paid for directly and this cost shall be considered subsidiary to other pay items of work.

9. All construction involving the new sewer system shall be in accordance with City of Wichita Standard Specifications dated March 1998.

10. Backfill above a depth of 12" over top of sewer pipe shall be compacted to 95% of standard density

11. Traffic will need to be maintained at all times throughout the project.

12. Removal and resetting of fences on project will be subsidiary to bid item 'Site Clearing and Restoration'.

13. Parking lot striping on project shall be subsidiary to bid item 'Concrete Parking Lot Removed and Replaced'.

14. Contractor shall open the 60" sewer every two hundred feet to verify visually that the pipe is completely filled. Arrangements for access to rear yards shall be Contractors's responsibility.

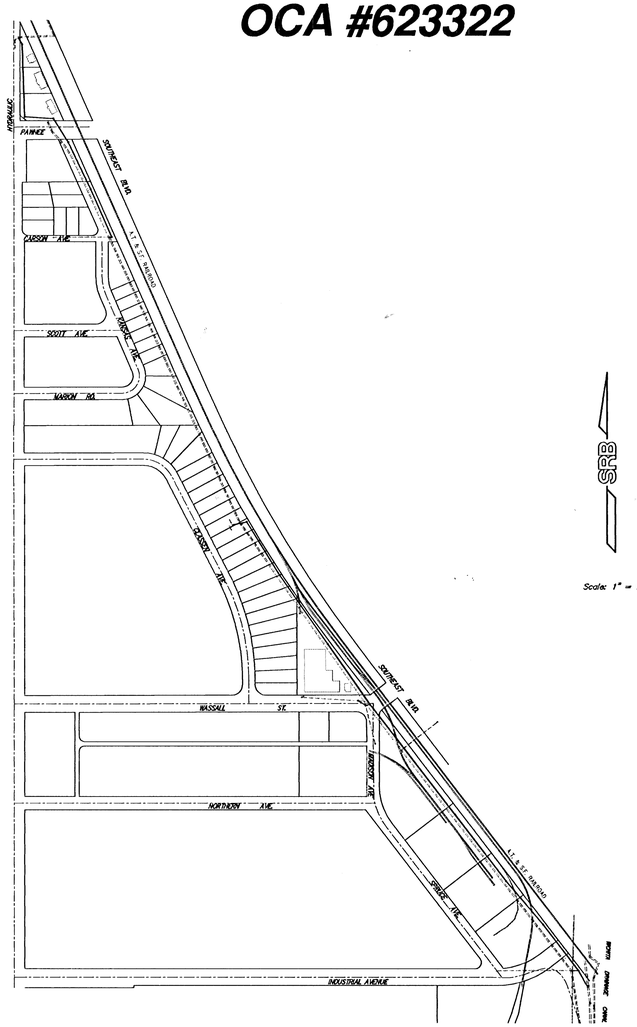

INDEX

1. TITLE SHEET
2. BENCHMARKS / OVERVIEW
3-4. LINE 1
5-9. LINE 2
10-12. 60" ABANDONMENT (CONT.)
13. LINE 3, LINE 4, LINE 5
14. STANDARD TYPE 'P' MANHOLE
15. SQUARE MANHOLE
16. MANHOLE FRAME AND COVER

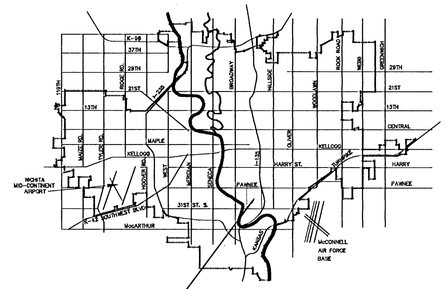

VICINITY MAP

Booked
P-231
8.2-02
RDL
Per Plan



1 SHEET

SRB 924 NORTH MAIN WICHITA, KANSAS 67203 316-264-8008 FAX 264-4621
SAVOY, RUGGLES & BOHM, P.A.
ENGINEERING & SURVEYING

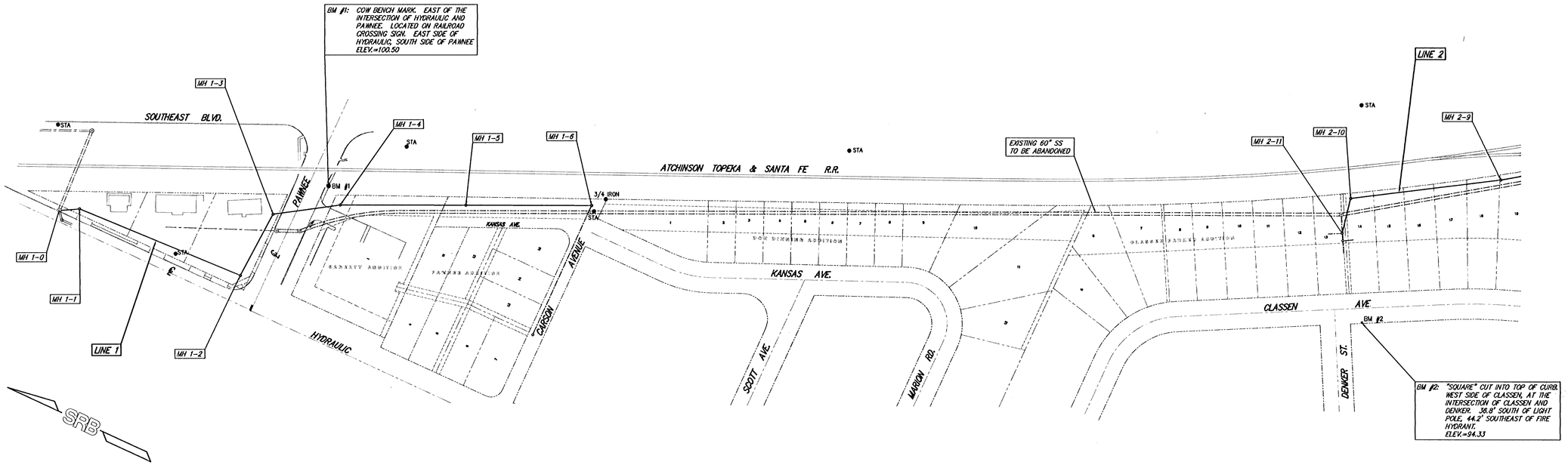

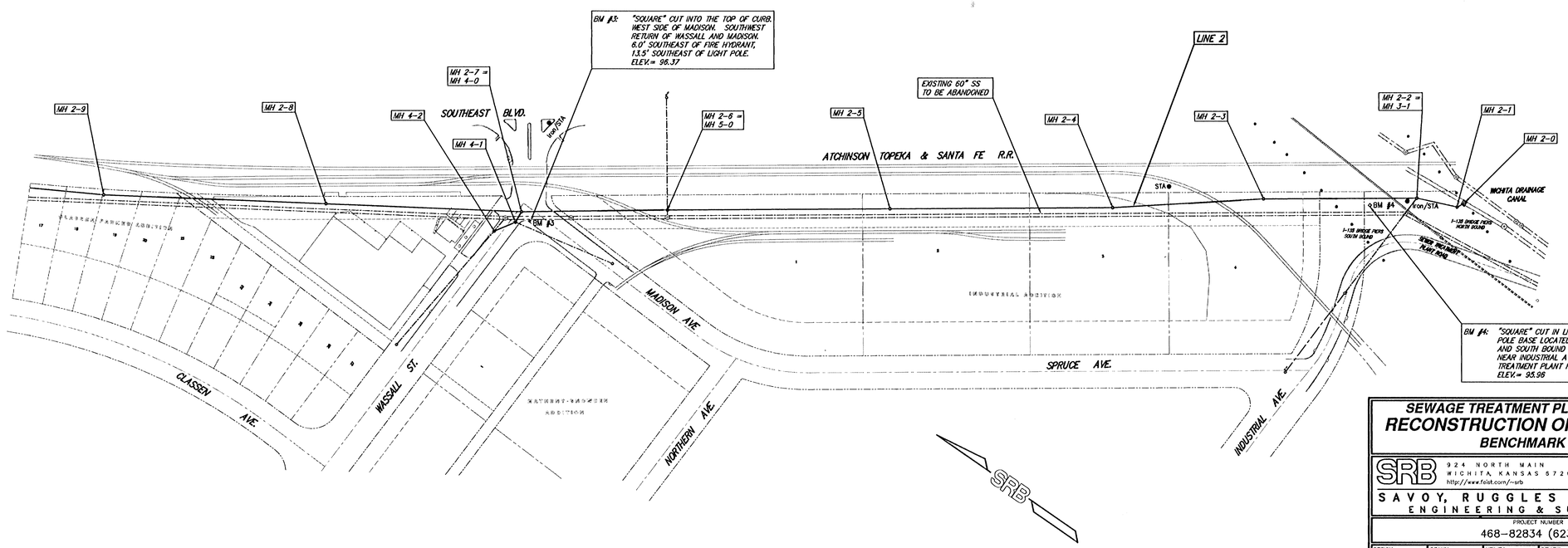

MANHOLE DIRECTORY

MANHOLE	SHEET
1-0	3
1-1	3
1-2	3
1-3	3.5
1-4	3.5
1-5	4
1-6	4
2-0	5
2-1	5
2-2	5
2-3	5
2-4	6
2-5	6
2-6	7
2-7	7
2-8	8
2-9	9
2-10	9
2-11	9
3-1	13
4-0	13
4-1	13
4-2	13
5-0	13

SEWAGE TREATMENT PLANT #1 - N. OF PAWNEE

RECONSTRUCTION OF PART OF SS NO. 22

BENCHMARK / OVERVIEW

SRB
924 NORTH MAIN
WICHITA, KANSAS 57203
http://www.feist.com/~srb
316-264-8008
FAX 264-4621
E-mail: srb@feist.com
SAVOY, RUGGLES & BOHM, P. A.
ENGINEERING & SURVEYING

PROJECT NUMBER 468-82834 (623322)

DESIGN	DRAWN	UTILITY	REVIEW	DATE	REVISED
MWS	MWS			01/24/00	

DGN/C FILE: Overview.dgn

SRB JOB: 1300X

SHEET 2 OF 16

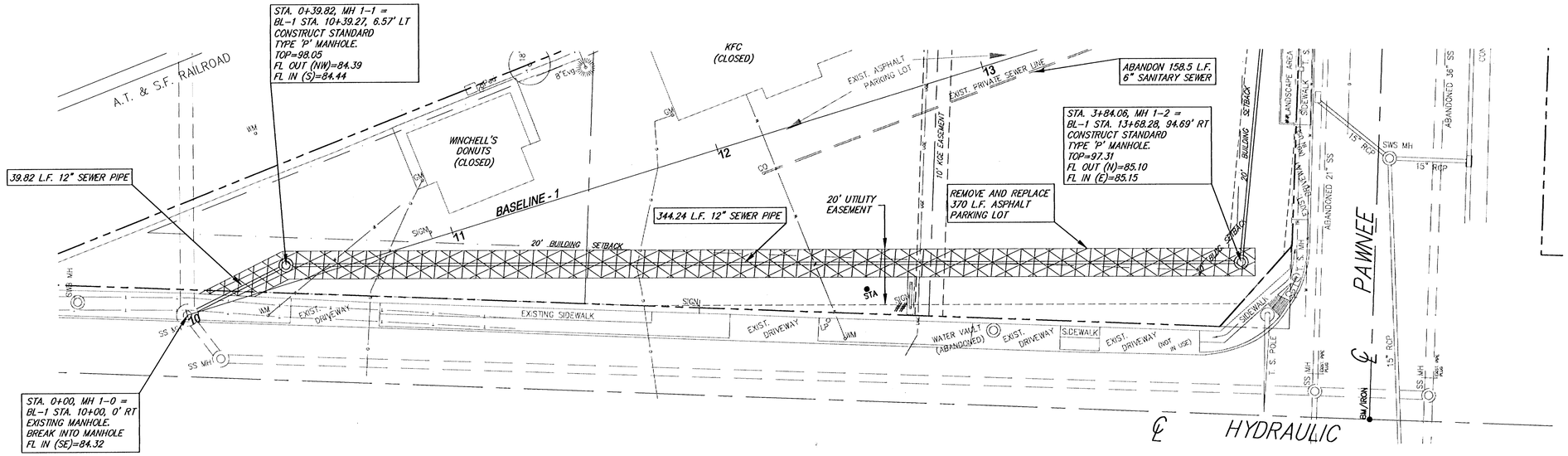

NOTE: CONNECT ALL EXISTING BUILDING SERVICES OVER TO THE NEW 12" SANITARY SEWER LINE. ALL WYES ON EXISTING PRIVATE LINE ARE 6" (RECORDED CITY INFORMATION).

SRB

GRAPHIC SCALE

40 20 10 0 20 60

(IN FEET)
1 inch = 20 ft.

SIGN POST AND BASE MAY BE REMOVED BY THE CONTRACTOR AS NEEDED. THEY DO NOT NEED TO BE REPLACED.

** LANDSCAPE AREA DOES NOT NEED TO BE REPLACED

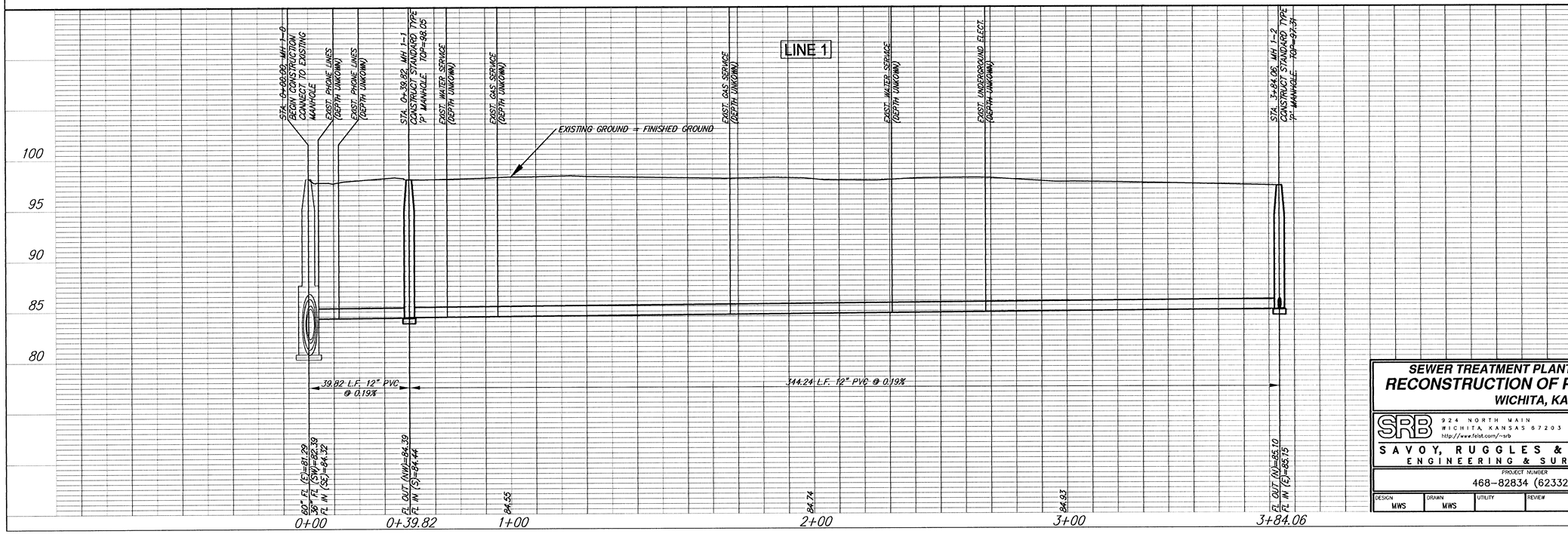

SEWER TREATMENT PLANT #1 - N. OF PAWNEE

RECONSTRUCTION OF PART OF SS NO. 22

WICHITA, KANSAS

SRB
924 NORTH MAIN
WICHITA, KANSAS 67203
http://www.feist.com/~srb
316-264-8008
FAX 264-4621
E-Mail: srb@feist.com

SAVOY, RUGGLES & BOHM, P.A.
ENGINEERING & SURVEYING

PROJECT NUMBER
468-82834 (623322)

DESIGN	DRAWN	UTILITY	REVIEW	DATE	REVISED
MWS	MWS			01/24/00	06/05/00

DWG FILE SS01

SRB JOB 13000

SHEET 3 OF 16

STA. 3+84.06, MH 1-2 =
BL-1 STA. 13+68.28, 94.69' RT
CONSTRUCT STANDARD
TYPE 'P' MANHOLE.
TOP=------
FL OUT (N)=85.10
FL IN (E)=85.15

REMOVE AND REPLACE
145 L.F. ASPHALT PAVEMENT

137.13 L.F. 12" SEWER PIPE

20' UTILITY
EASEMENT

ABANDON 55 L.F.
6" SANITARY SEWER

PIZZA
HUT

STA. 5+21.19, MH 1-3 =
BL-1 STA. 14+21.19, 31.82' LT
CONSTRUCT STANDARD
TYPE 'P' MANHOLE.
TOP=97.82
FL OUT (W)=85.41
FL IN (SE)=85.46

NOTE: CONNECT ALL EXISTING BUILDING SERVICES OVER
TO THE NEW 12" SANITARY SEWER LINE.
ALL WYES ON EXISTING PRIVATE LINE ARE 6"
(RECORDED CITY INFORMATION).

REMOVE AND REPLACE
8.0 L.F. CONCRETE
SIDEWALK

GRAPHIC SCALE
40 20 10 0 20 60
(IN FEET)
1 inch = 20 ft.

HYDRANT

(NOT IN USE)

20' BLDG. SETBACK

20' BUILDING SETBACK

SIDEWALK

T. S. POLE

LANDSCAPE AREA

T. S. MH

EXIST. DRIVEWAY

T. S. BOX

EXIST. 16" LW

EXIST. 12" SEWER PIPE

EXIST. 8" SEWER PIPE

LANDSCAPE AREA

TRAFFIC SIGNAL BOX

SIDEWALK

SIGN

PP

FWS MH

TP

SS MH

ABANDONED 21" SS

PAWNEE

BM/IRON

15" RCP

SS MH

ABANDONED 36" SS

CONCRETE SIDEWALK

ABANDON EXIST. 60" SS
AND MANHOLES IN PLACE.
ABANDON PER CITY OF
WICHITA SPECIFICATIONS

BASELINE - 'L'

L1+30.84

L1+47.16.92

133.77 L.F. 12" SEWER PIPE

INSTALL 89 L.F.
FLOWABLE FILL

TS MH

SIGN

BM

RR SIGNAL POLE

SIGN

SIGN

TS MH

SOUTHEAST BLVD.

REMOVE AND REPLACE
68 L.F. CONCRETE PAVEMENT

Posts

PP

REMOVE AND REPLACE
25.0 L.F. CONCRETE
DRIVEWAY

A.T. & S.F. RAILROAD

RAILROAD
CONTROL
BOX

TP

EXIST. CONCRETE
DRIVEWAY

ABANDON 136.0 L.F.
60" SANITARY SEWER

STA. 6+54.96, MH 1-4 =
BL-1 STA. 15+59.96, 46.27' LT
CONSTRUCT STANDARD
TYPE 'P' MANHOLE.
TOP=98.58
FL OUT (NW)=85.71
FL IN (SE)=85.76

** LANDSCAPE AREA DOES NOT
NEED TO BE REPLACED

SRB

LINE 1

STA. 3+84.06, MH 1-2
CONSTRUCT STANDARD TYPE
'P' MANHOLE. TOP=97.31

PRIVATE 6" SANITARY SEWER
FLOW LINE
(TO BE ABANDONED)

EXIST. GAS SERVICE
(DEPTH UNKNOWN)

EXIST. WATER SERVICE
(DEPTH UNKNOWN)

STA. 5+21.19, MH 1-3
CONSTRUCT STANDARD TYPE
'P' MANHOLE. TOP=97.82

EXIST. TRAFFIC SIGNAL LINE
(DEPTH UNKNOWN)

EXIST. 16" WATERLINE
TP=92.5 +/- (REC. INFO)

EXIST. 12" HP ST. GAS LINE
(DEPTH UNKNOWN)

CL PAWNEE

EXIST. 4" TP ST GAS LINE
(DEPTH UNKNOWN)

EXIST. 8000# TELEPHONE
LINE (DEPTH UNKNOWN)

STA. 6+54.96, MH 1-4
CONSTRUCT STANDARD TYPE
'P' MANHOLE. TOP=98.58

EXISTING GROUND = FINISHED GROUND

89.0 L.F.
FLOWABLE
FILL

137.13 L.F. 12" PVC @ 0.19%

133.77 L.F. 12" PVC @ 0.19%

FL OUT (N)=85.10
FL IN (E)=85.15

85.18

85.37

FL OUT (W)=85.41
FL IN (SE)=85.46

85.61

FL OUT (NW)=85.71
FL IN (S)=85.76

100 95 90 85 80

3+84.06 4+00 5+00 5+21.19 6+00 6+54.96

SEWER TREATMENT PLANT #1 - N. OF PAWNEE
RECONSTRUCTION OF PART OF SS NO. 22
WICHITA, KANSAS

SRB
924 NORTH MAIN
WICHITA, KANSAS 67203
http://www.feist.com/~srb
316-264-8008
FAX 264-4621
E-Mail: srb@feist.com
SAVOY, RUGGLES & BOHM, P. A.
ENGINEERING & SURVEYING

PROJECT NUMBER
468-82834 (623322)

DESIGN	DRAWN	UTILITY	REVIEW	DATE	REVISED
MWS	MWS			01/24/00	09/05/00

DWG FILE: SS13.dwg

CDBG JOB 13006

SHEET 3.5 OF 16

STA. 6+54.96, MH 1-4 =
BL-1 STA. 15+59.96, 46.27' LT
CONSTRUCT STANDARD
TYPE 'P' MANHOLE.
TOP=98.58
FL OUT (NW)=85.71
FL IN (SE)=85.76

248.40 L.F. 12" SEWER PIPE

50' R/W (RR)

40' UTILITY ESMT.

SRB

STA. 9+03.35, MH 1-5 =
BL-1 STA. 18+07.80, 29.60' LT
CONSTRUCT STANDARD
TYPE 'P' MANHOLE.
TOP=97.84
FL OUT (NW)=86.23
FL IN (SE)=86.28

ABANDON 486.5 L.F.
60" SANITARY SEWER

248.40 L.F. 12" SEWER PIPE

STA. 11+51.75, MH 1-6 =
BL-1 STA. 20+54.75, 13.37' LT
CONSTRUCT STANDARD
TYPE 'P' MANHOLE.
TOP=98.00
FL OUT (NW)=86.75
FL IN (SE)=86.85

20.00 L.F. 10" DUCTILE IRON PIPE

ABANDON EXIST. 60" SS AND MANHOLE. REMOVE MANHOLE TO NEW 10" PIPE ELEVATION. PLUG 60" SS PIPE (BOTH SIDES) WITH STANDARD CINDER BLOCKS. FILL BLOCK VOIDS WITH CONCRETE.

3/4 IRON

EXIST. CONCRETE DRIVEWAY

60' R/W

EXIST. 60" SS

40' UTILITY ESMT.

BASELINE 2

STA 20+48.71

SS MH

BASELINE - 1

EXIST. GRAVEL ROAD

KANSAS AVE.

EXIST. 2" CIGL WATERLINE

EXIST. CONCRETE PARKING LOT

EXISTING BUILDING

STA. 11+71.75, LINE 1 =
BL-1 STA. 20+46.48, 4.85' RT
CONNECT TO EXISTING 10"
SANITARY SEWER LINE WITH
APPROPRIATE COUPLING

EXIST. 10" W

KANSAS AVE.

EXIST. 2" CIGL WATERLINE

CARSON AVE.

EXIST. 2" CIGL WATERLINE

SAGERTY ADDITION

PAWNEE ADDITION

16 17 18 19 20 1 7 11 12 15

GRAPHIC SCALE

40 20 10 0 20 60

(IN FEET)
1 inch = 20 ft.

100 95 90 85 80

STA. 6+54.96, MH 1-4
CONSTRUCT STANDARD
TYPE 'P' MANHOLE.
TOP=98.58

EXISTING GROUND = FINISHED GROUND

STA. 9+03.35, MH 1-5
CONSTRUCT STANDARD
TYPE 'P' MANHOLE.
TOP=97.84

LINE 1

STA. 11+51.75, MH 1-6
CONSTRUCT STANDARD
TYPE 'P' MANHOLE.
TOP=98.00

EXIST. 60" SAN. SEWER

STA. 11+71.75
1-10" COUPLING

248.40 L.F. 12" PVC @ 0.19%

248.40 L.F. 12" PVC @ 0.19%

20.00 L.F. 10" DUCTILE IRON @ 0.10%

FL OUT (NW)=85.71
FL IN (SE)=85.76

FL OUT (NW)=86.23
FL IN (SE)=86.28

FL OUT (NW)=86.75
FL IN (SE)=86.85

FL OUT (NW)=86.90

85.97 86.16 86.40 86.59

5+90.95 7+00 8+00 8+39.35 9+00 10+00

SEWAGE TREATMENT PLANT #1 - N. OF PAWNEE
RECONSTRUCTION OF PART OF SS NO. 22
WICHITA, KANSAS

SRB
924 NORTH MAIN
WICHITA, KANSAS 67203
http://www.feist.com/~srb
316-264-8008
FAX 264-4621
E-Mail: srb@feist.com

SAVOY, RUGGLES & BOHM, P.A.
ENGINEERING & SURVEYING

PROJECT NUMBER
468-82834 (623322)

DESIGN	DRAWN	UTILITY	REVIEW	DATE	REVISED
MWS	MWS			01/24/00	06/05/00

DWG FILE: SS22.dwg

SSXX 'XX 'XXXX

SHEET 4 OF 16

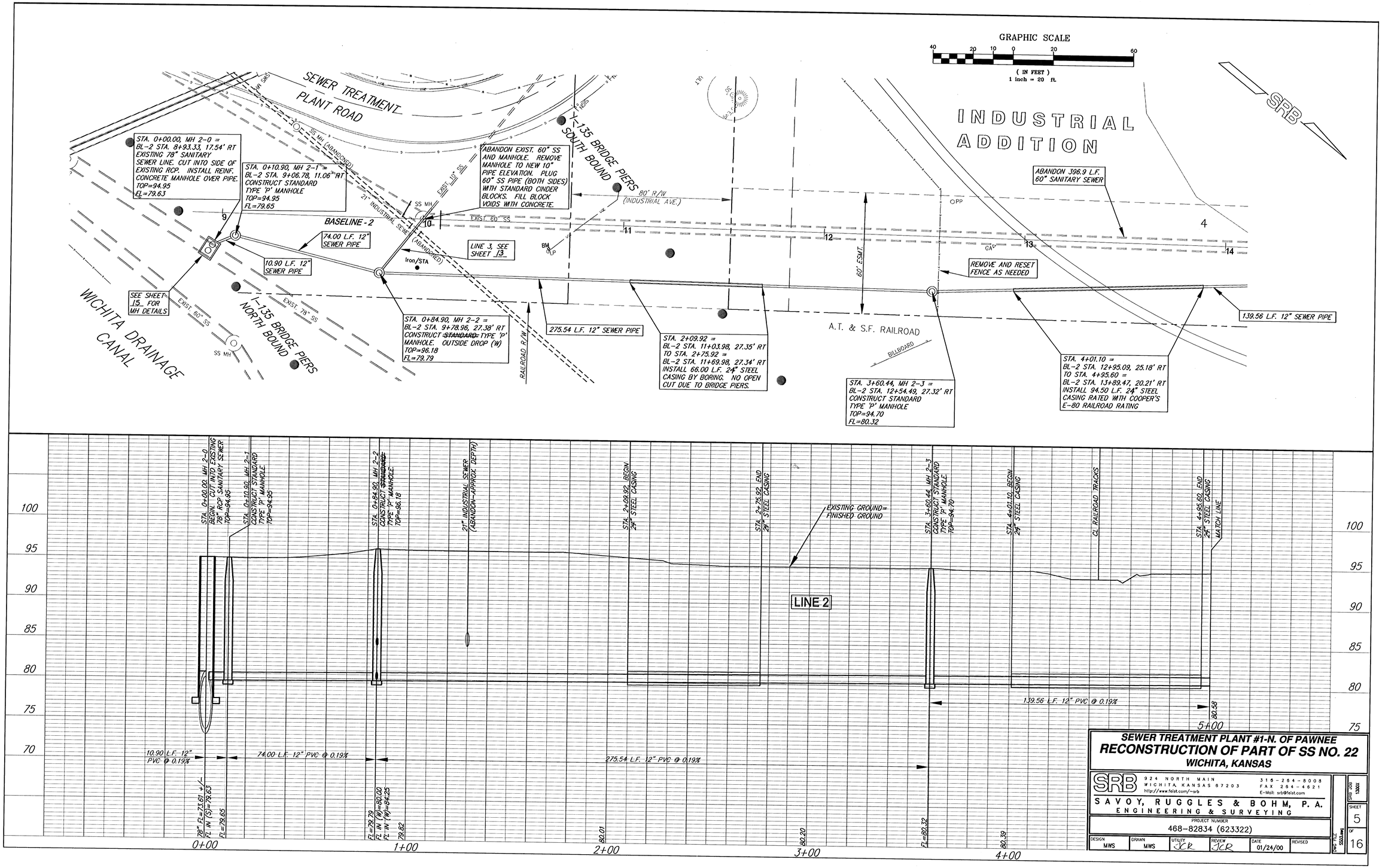

SEWER TREATMENT PLANT #1-N. OF PAWNEE

RECONSTRUCTION OF PART OF SS NO. 22

WICHITA, KANSAS

SRB
924 NORTH MAIN
WICHITA, KANSAS 67203
http://www.feist.com/~srb
316-264-8008
FAX 264-4621
E-Mail: srb@feist.com

SAVOY, RUGGLES & BOHM, P. A.
ENGINEERING & SURVEYING

PROJECT NUMBER
468-82834 (623322)

DESIGN	DRAWN	UTILITY	REVIEW	DATE	REVISED
MWS	MWS	JCR	JCR	01/24/00	

DWG FILE SS03.dwg

SRB JOB 1300X

SHEET 5 OF 16

GRAPHIC SCALE

40 20 10 0 20 60

(IN FEET)
1 inch = 20 ft.

INDUSTRIAL ADDITION

3

4

2

SRB

BASELINE - 2

14 15 16 17 18 19 20

EXIST. 60" SS

60' ESMT.

RAILROAD R/W

ABANDON 600 L.F. 60" SANITARY SEWER

REMOVE AND RESET FENCE AS NEEDED

STA

132.73 L.F. 12" SEWER PIPE

STA. 6+32.73, MH 2-4 = BL-2 STA. 15+26.41, 13.00' RT
CONSTRUCT STANDARD TYPE 'P' MANHOLE.
TOP=94.80
FL=80.83

400.00 L.F. 12" SEWER PIPE

STA. 10+32.73, MH 2-5 = BL-2 STA. 19+26.41, 13.00' RT
CONSTRUCT STANDARD TYPE 'P' MANHOLE.
TOP=93.62
FL=81.59

67.27 L.F. 12" SEWER PIPE

A.T. & S.F. RAILROAD

LINE 2

MATCH LINE

STA. 6+32.73, MH 2-4
CONSTRUCT STANDARD TYPE 'P' MANHOLE
TOP=94.80

EXISTING GROUND=FINISHED GROUND

STA. 10+32.73, MH 2-5
CONSTRUCT STANDARD TYPE 'P' MANHOLE
TOP=93.62

MATCH LINE

95 90 85 80 75

132.73 L.F. 12" PVC @ 0.19%

400 L.F. 12" PVC @ 0.19%

67.27 L.F. 12" PVC @ 0.19%

FL=80.83

FL=81.59

80.58 80.77 80.96 81.15 81.34 81.53 81.72

5+00 6+00 7+00 8+00 9+00 10+00 11+00

SEWER TREATMENT PLANT #1-N. OF PAWNEE
RECONSTRUCTION OF PART OF SS NO. 22
WICHITA, KANSAS

SRB
924 NORTH MAIN
WICHITA, KANSAS 67203
http://www.feist.com/~srb
316-264-8008
FAX 264-4621
E-Mail: srb@feist.com

SAVOY, RUGGLES & BOHM, P. A.
ENGINEERING & SURVEYING

PROJECT NUMBER
468-82834 (623322)

DESIGN	DRAWN	UTILITY	REVIEW	DATE	REVISED
MWS	MWS	JCR	JCR	01/24/00	

DWG FILE: SS04.dwg

SRB JOB 13004

SHEET 6 OF 16

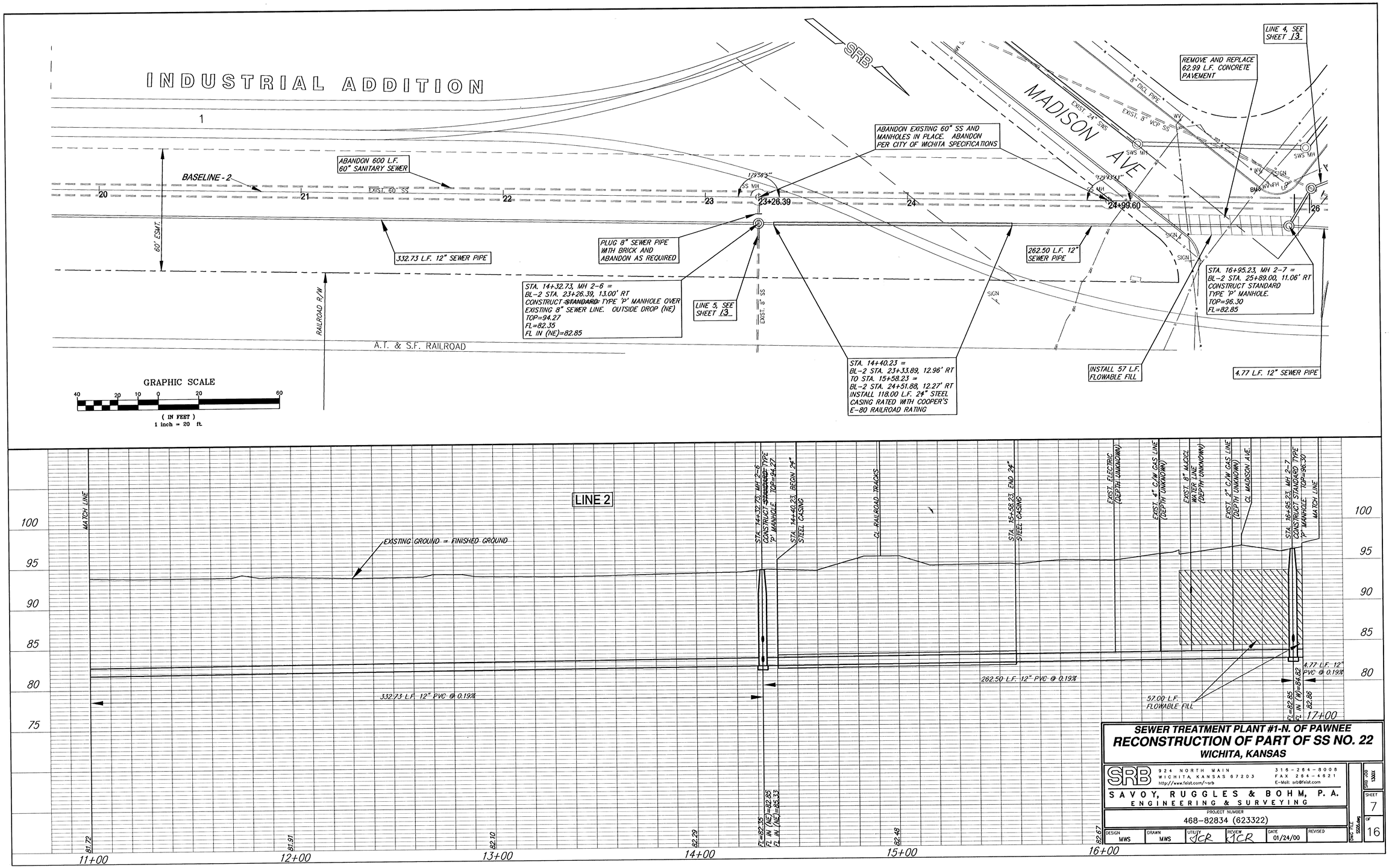

SEWER TREATMENT PLANT #1-N. OF PAWNEE

RECONSTRUCTION OF PART OF SS NO. 22

WICHITA, KANSAS

SRB 924 NORTH MAIN WICHITA, KANSAS 67203 http://www.feist.com/~srb 316-264-8008 FAX 264-4621 E-Mail: srb@feist.com

SAVOY, RUGGLES & BOHM, P.A.
ENGINEERING & SURVEYING

PROJECT NUMBER 468-82834 (623322)

DESIGN	DRAWN	UTILITY	REVIEW	DATE	REVISED
MWS	MWS	JCR	JCR	01/24/00	

DWG FILE SS05.dwg

SRB JOB 1300X

SHEET 7 OF 16

LINE 4, SEE SHEET 13

EXIST. 24"

EXIST. 8" VCP SS

SWS MH

SIGN

WM

W

W

W

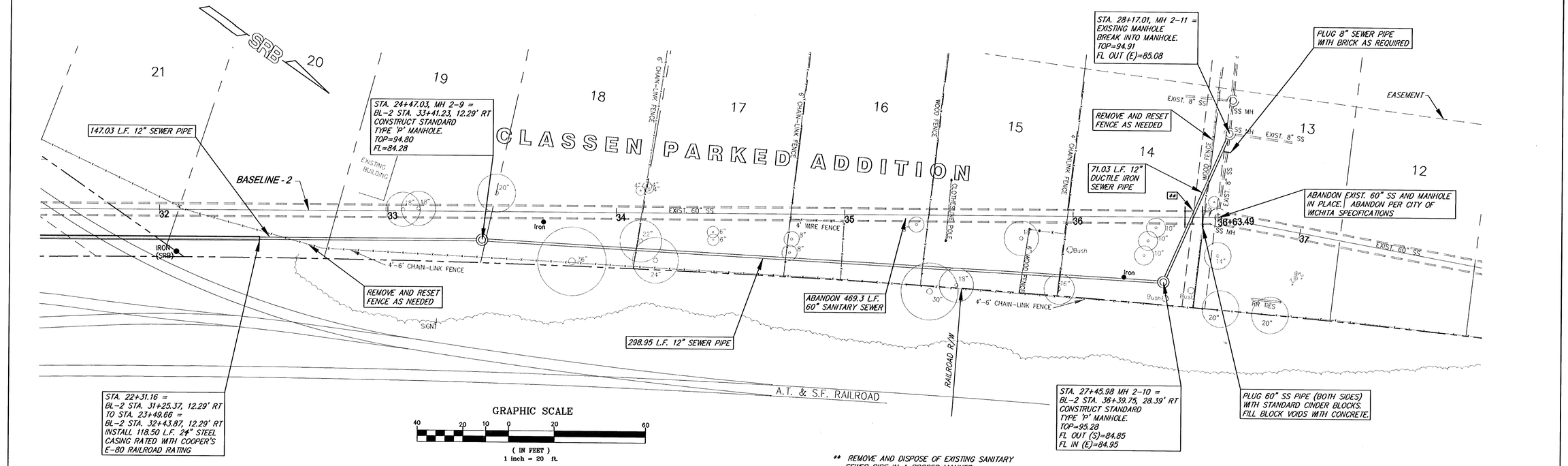

GRAPHIC SCALE

40 20 10 0 20 60

(IN FEET)

1 inch = 20 ft.

** REMOVE AND DISPOSE OF EXISTING SANITARY SEWER PIPE IN A PROPER MANNER

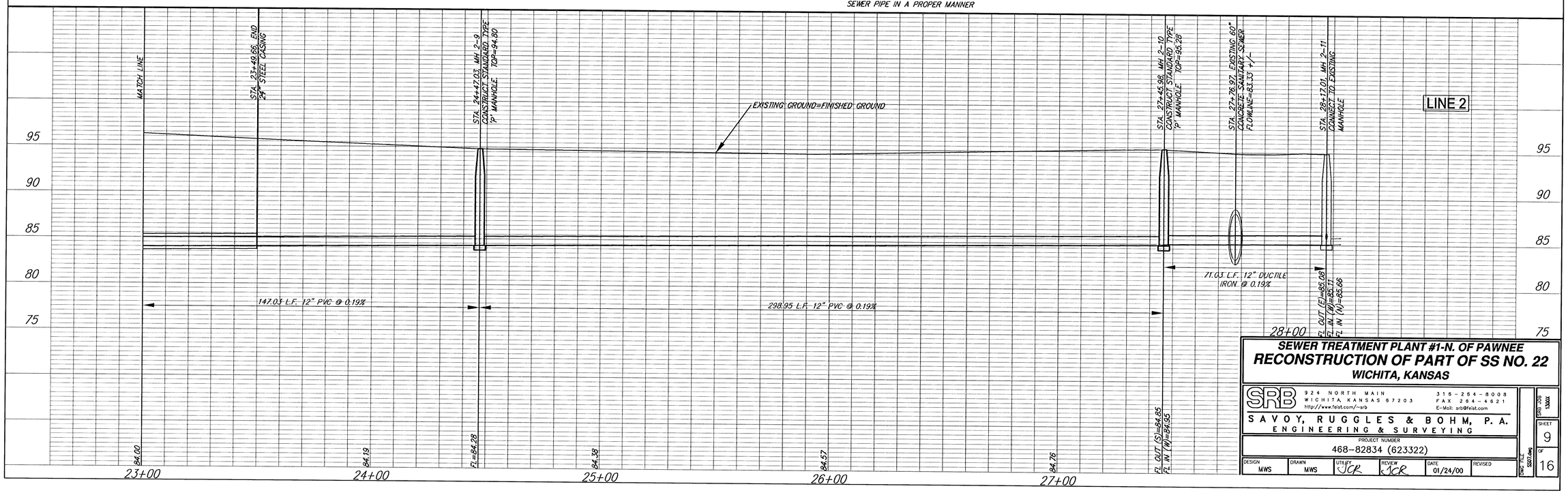

SEWER TREATMENT PLANT #1-N. OF PAWNEE

RECONSTRUCTION OF PART OF SS NO. 22

WICHITA, KANSAS

SRB
924 NORTH MAIN
WICHITA, KANSAS 67203
http://www.feist.com/~srb
316-264-8008
FAX 264-4621
E-Mail: srb@feist.com

SAVOY, RUGGLES & BOHM, P. A.
ENGINEERING & SURVEYING

PROJECT NUMBER 468-82834 (623322)

DESIGN	DRAWN	UTILITY	REVIEW	DATE	REVISED
MWS	MWS	JCR	JCR	01/24/00	

DWG. NO. SS11.dwg

DRWG. NO. 13000

SHEET 9 OF 16

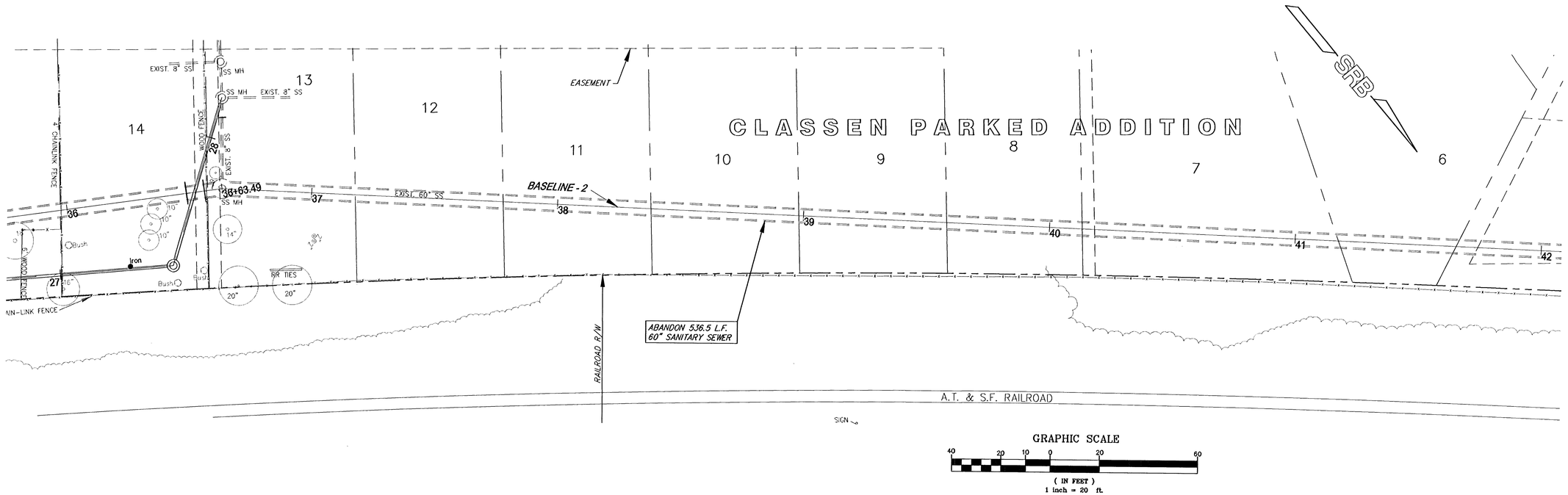

GRAPHIC SCALE

40 20 10 0 20 60

(IN FEET)
1 inch = 20 ft.

SEWAGE TREATMENT PLANT #1 - N. OF PAWNEE

RECONSTRUCTION OF PART OF SS NO. 22

WICHITA, KANSAS

SRB
924 NORTH MAIN
WICHITA, KANSAS 67203
http://www.feist.com/~srb
316-264-8008
FAX 264-4621
E-Mail: srb@feist.com

SAVOY, RUGGLES & BOHM, P. A.
ENGINEERING & SURVEYING

PROJECT NUMBER
468-82834 (623322)

DESIGN	DRAWN	UTILITY	REVIEW	DATE	REVISED
MWS	MWS	JCR	JCR	01/24/00	

DWG FILE 5309

SRB JOB 13002

SHEET 10 OF 16

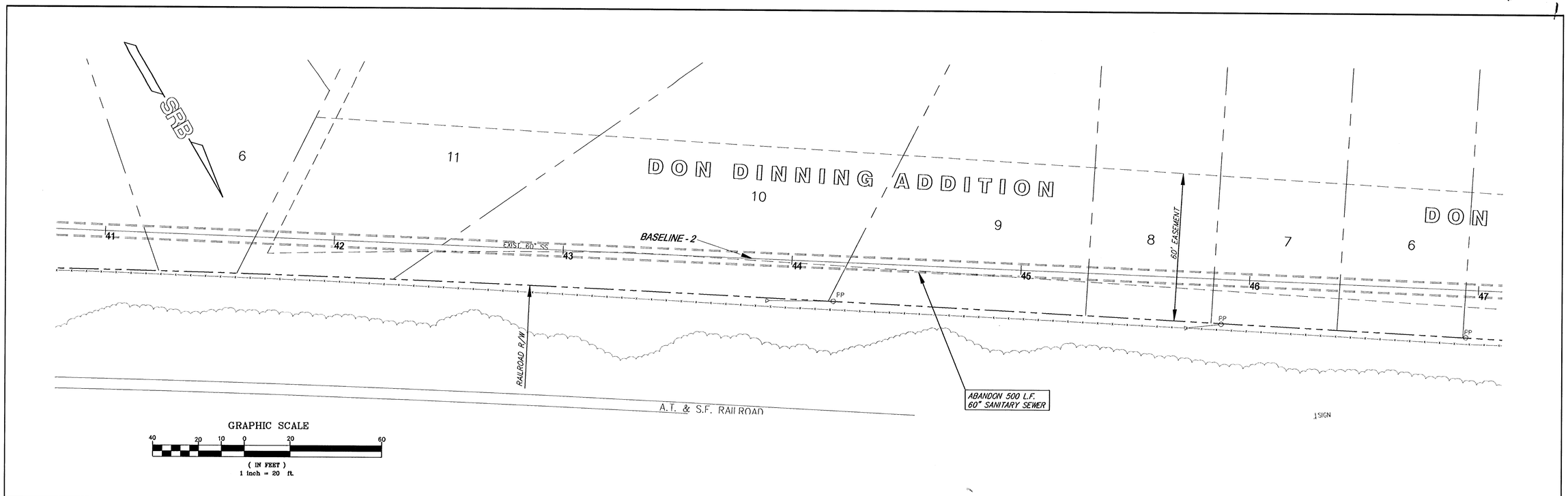

SEWAGE TREATMENT PLANT #1 - N. OF PAWNEE

RECONSTRUCTION OF PART OF SS NO. 22

WICHITA, KANSAS

SRB
924 NORTH MAIN
WICHITA, KANSAS 67203
http://www.feist.com/~srb
316-264-8008
FAX 264-4621
E-Mail: srb@feist.com
SAVOY, RUGGLES & BOHM, P. A.
ENGINEERING & SURVEYING

PROJECT NUMBER
468-82834 (623322)

DESIGN	DRAWN	UTILITY	REVIEW	DATE	REVISED
MWS	MWS	JCR	JCR	01/24/00	

DWG FILE SS10

SRB JOB 1330X

SHEET 11 OF 16

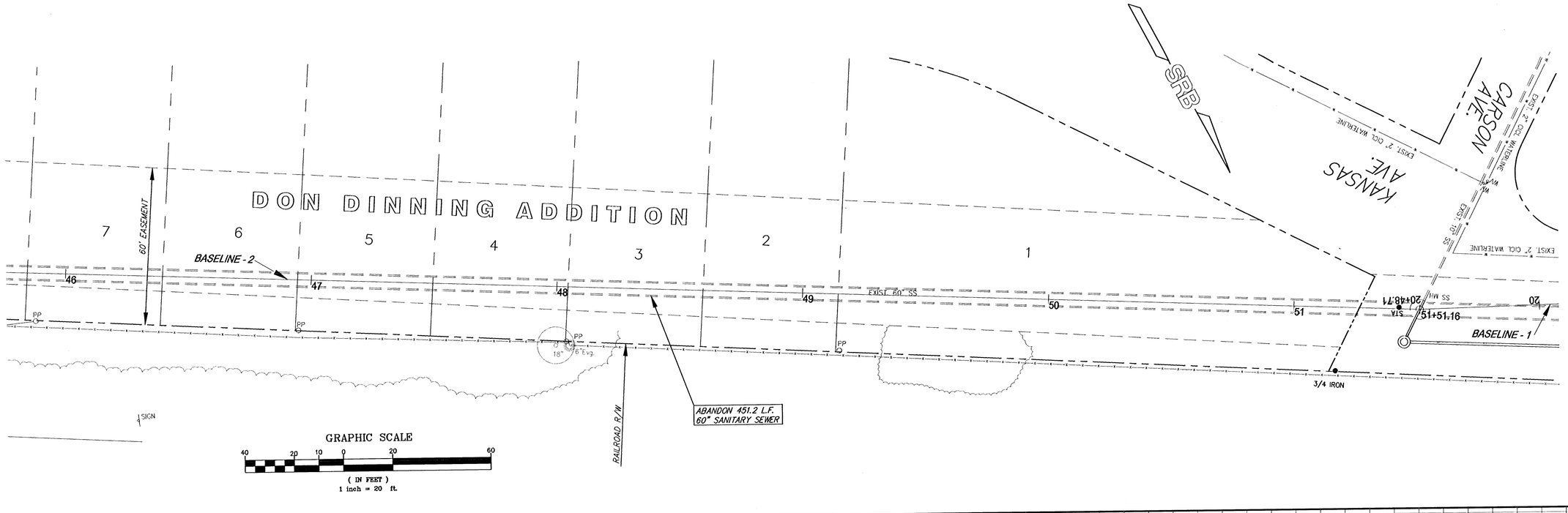

SEWAGE TREATMENT PLANT #1 - N. OF PAWNEE

RECONSTRUCTION OF PART OF SS NO. 22

WICHITA, KANSAS

SRB
924 NORTH MAIN
WICHITA, KANSAS 67203
http://www.feist.com/~srb
316-264-8008
FAX 264-4621
E-Mail: srb@feist.com

SAVOY, RUGGLES & BOHM, P. A.
ENGINEERING & SURVEYING

PROJECT NUMBER
468-82834 (623322)

DESIGN	DRAWN	UTILITY	REVIEW	DATE	REVISED
MWS	MWS	JCR	JCR	01/24/00	

DWG FILE SS11

SRB JOB 10006

SHEET 12 OF 16

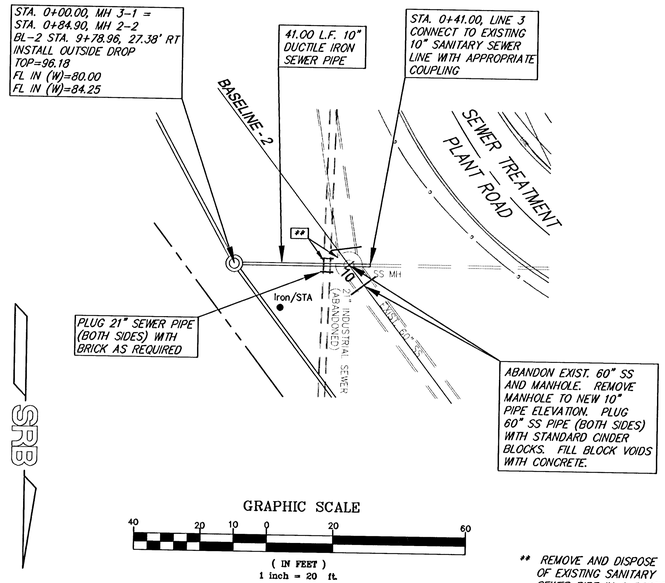

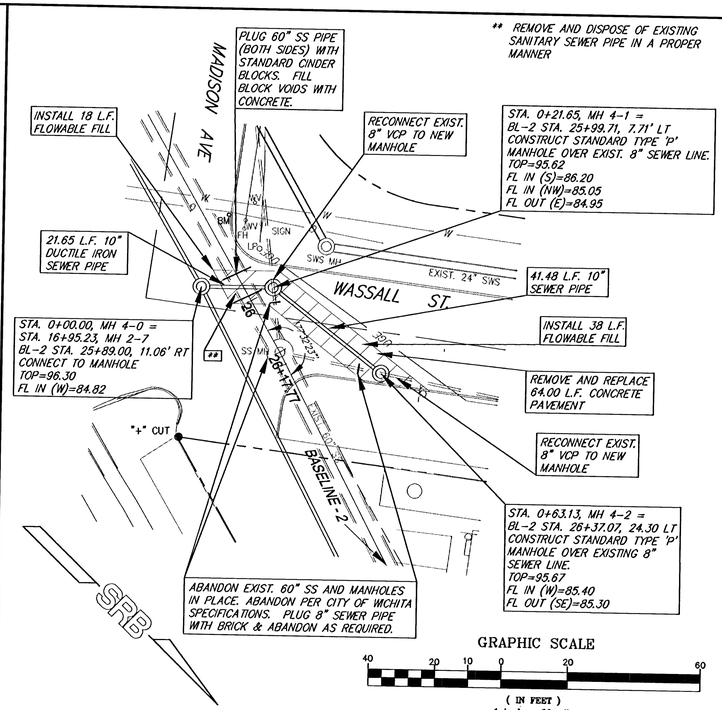

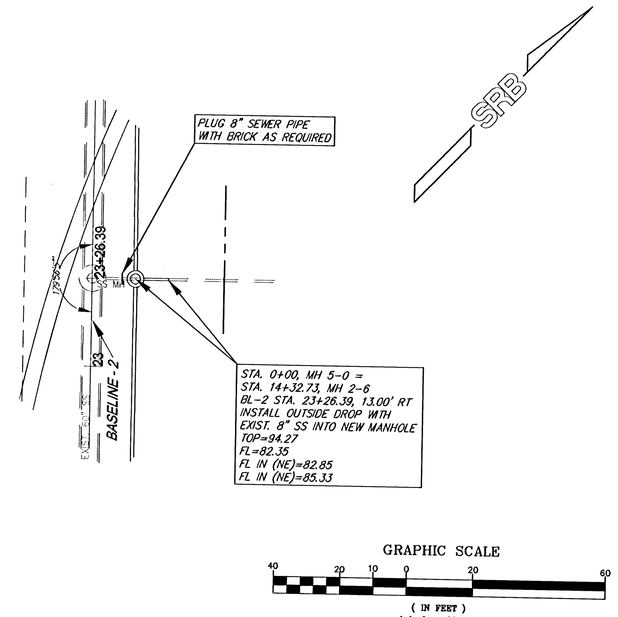

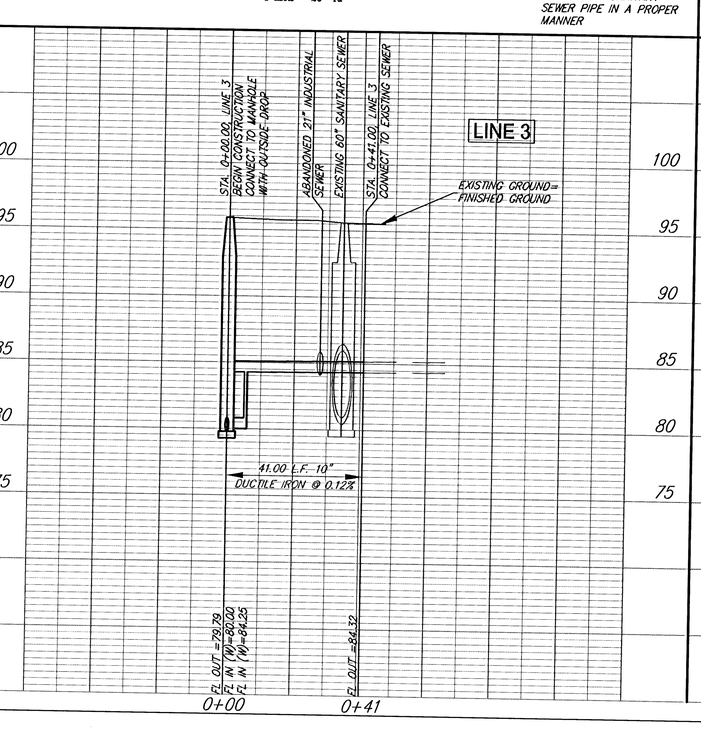

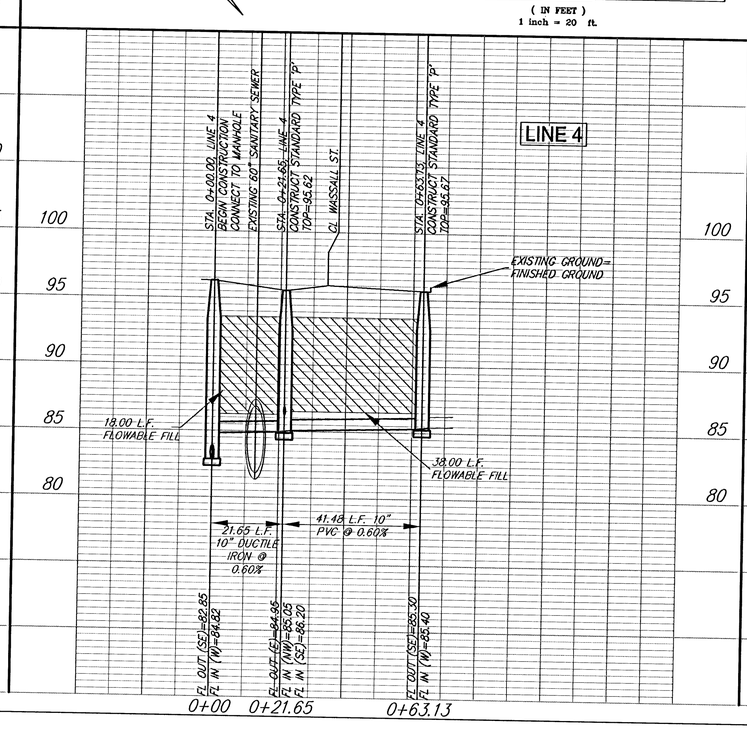

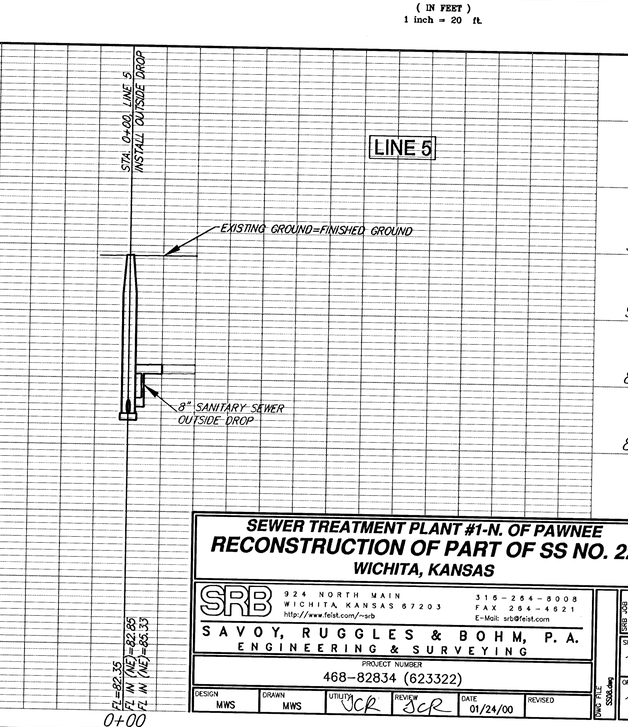

SEWER TREATMENT PLANT #1-N. OF PAWNEE

RECONSTRUCTION OF PART OF SS NO. 22

WICHITA, KANSAS

SRB
924 NORTH MAIN
WICHITA, KANSAS 67203
http://www.feist.com/~srb
316-264-8008
FAX 264-4621
E-Mail: srb@feist.com

SAVOY, RUGGLES & BOHM, P.A.
ENGINEERING & SURVEYING

PROJECT NUMBER
468-82834 (623322)

DESIGN	DRAWN	UTILITY	REVIEW	DATE	REVISED
MWS	MWS	JCR	JCR	01/24/00	

DWG FILE: SS08.dwg

SRB JOB 13002

SHEET 13 OF 16

SEWER APPURTENANCES DETAILS

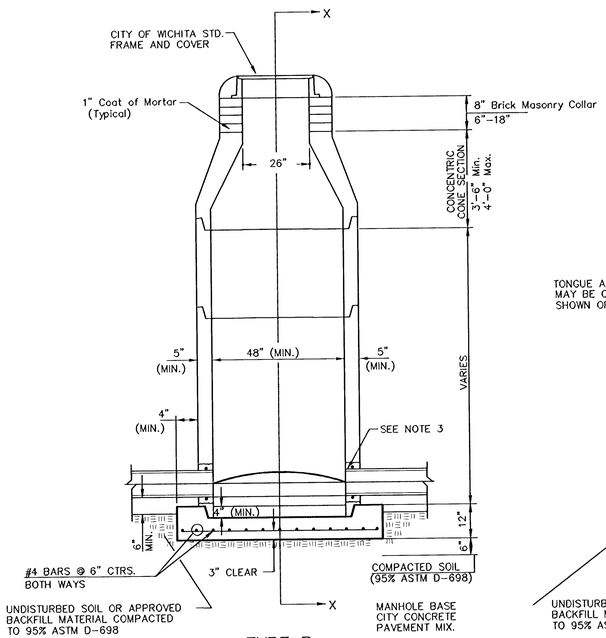

TYPE P
STANDARD MANHOLE

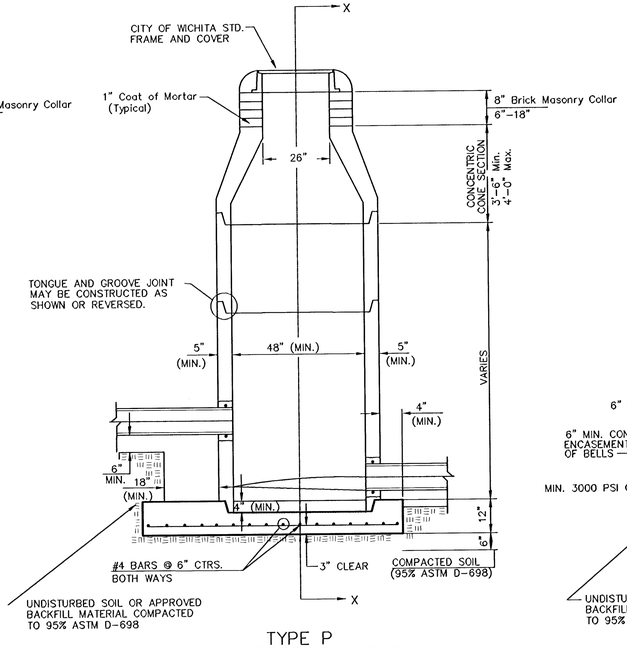

TYPE P
INSIDE DROP MANHOLE

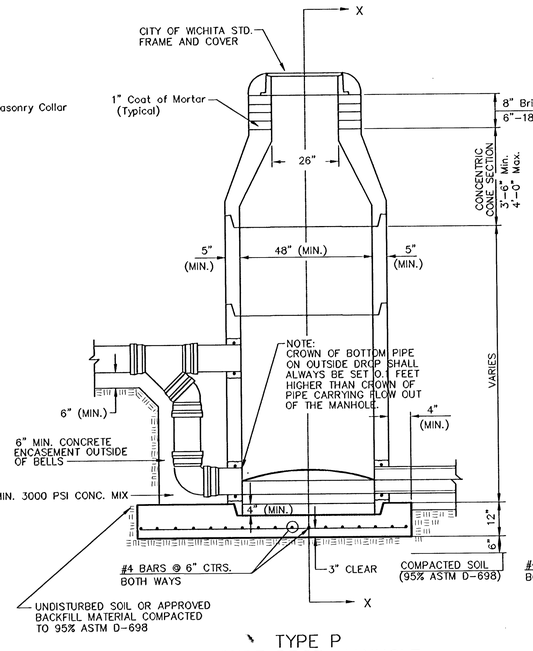

TYPE P
OUTSIDE DROP MANHOLE

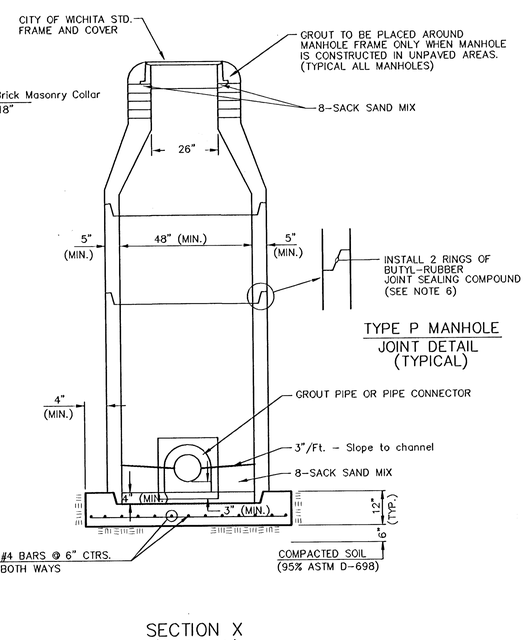

TYPE P MANHOLE
JOINT DETAIL
(TYPICAL)

SECTION X
(TYPICAL)

GENERAL NOTES

PRECAST MANHOLE NOTES

1. ALL PRECAST CONCRETE MANHOLE SECTIONS SHALL CONFORM TO THE LATEST REVISIONS OF A.S.T.M. C478 AS MODIFIED BY THE SPECIFICATIONS.
2. NON-SHRINK GROUT SHALL BE NON-METALLIC TYPE.
3. APPROVED FLEXIBLE WATERSTOP GASKETS SHALL BE INSTALLED TO JOIN THE SEWER TO THE MANHOLE WALL WHEN A.B.S. COMPOSITE PIPE OR P.V.C. PIPE IS USED. FOR OTHER TYPES OF PIPE THE SEWER SHALL BE GROUTED IN PLACE WITH NON-SHRINK GROUT. THE SEWER PIPE SHALL BE SUPPORTED WITH CONCRETE ENCASEMENT A MINIMUM OF 3 FEET FROM THE MANHOLE WALL AND TO THE FIRST JOINT FOR V.C.P. SUCH THAT THE JOINT REMAINS FLEXIBLE.
4. ALL INSIDE SURFACES OF THE CONCRETE MANHOLE WHICH WOULD BE EXPOSED TO SEWER GAS SHALL BE COATED WITH 2 COATS INEMEC SERIES 66 HI-BUILD EPOXOLINE, DRY THICKNESS OF 8 MILS (MIN.)
5. EXTERIOR MANHOLE WALLS SHALL BE COATED WITH 1 COAT MOBILARMA 633 BITUMINOUS COATING.
6. JOINT SEALING COMPOUND SHALL BE KENT SEAL NO. 2 OR APPROVED EQUAL.
7. PRECAST MANHOLES SHALL BE SET AT LEAST 4 INCHES INTO THE MANHOLE BASE.
8. TOP OF MANHOLE FLOOR SLAB SHALL BE AT LEAST 3 INCHES BELOW THE FLOW LINE OF THE OUTLET PIPE TO INSURE SUFFICIENT MINIMUM THICKNESS OF SHAPED INVERT.
9. LIFTING HOLES SHALL BE FILLED WITH NON-SHRINK GROUT AND THE INTERIOR SURFACE COATED AS SPECIFIED.
10. MORTAR USED IN MASONRY CONSTRUCTION SHALL CONTAIN 8 SACKS OF CEMENT PER CUBIC YARD. CONCRETE USED IN MANHOLE BASES SHALL CONFORM TO THE REQUIREMENTS OF CONCRETE FOR CONCRETE PAVEMENT CONSTRUCTION AS SPECIFIED IN THE CITY STANDARD PAVING SPECIFICATIONS USING CITY CONCRETE PAVEMENT MIX WITHOUT AIR ENTRAINING ADMIXTURE. MORTAR SHALL BE PLACED AROUND THE MANHOLE RING AS SHOWN ON THE DRAWINGS WHEN MANHOLES ARE CONSTRUCTED IN UNPAVED AREAS. MANHOLES CONSTRUCTED WHERE PIPE SIZES ARE SMALLER THAN 24" SHALL HAVE AN INSIDE DIAMETER OF 4'. MANHOLES CONSTRUCTED WHERE PIPE SIZES ARE 24" OR LARGER SHALL HAVE AN INSIDE DIAMETER OF 5'. COMPLETED MANHOLE SHALL BE WITHOUT LEAKS AND WATER TIGHT.
11. REINFORCING STEEL SHALL BE INSTALLED IN THE MANHOLE BASES AND SHALL CONSIST OF NO. 4 BARS PLACED ON 6" CENTERS IN BOTH DIRECTIONS. THE MANHOLE BASE REINFORCEMENT SHALL BE PLACED AT LEAST 3" ABOVE THE BOTTOM OF THE MANHOLE BASE. ALL COSTS FOR FURNISHING AND INSTALLING REINFORCING STEEL SHALL BE INCLUDED IN THE UNIT PRICE BID FOR THE MANHOLE.
12. OPENINGS SHALL BE CUT INTO THE MANHOLE WALL WHEN OUTSIDE DROPS ARE CONSTRUCTED ON EXISTING MANHOLES. SUCH OPENINGS CUT INTO EXISTING MANHOLES SHALL BE AS SMALL AS PRACTICAL TO FACILITATE INSTALLING AND GROUTING THE NEW PIPE IN PLACE. WATERSTOP GASKETS SHALL BE USED WITH P.V.C. AND A.B.S. COMPOSITE PIPE. THE NEW PIPE SHALL BE GROUTED INTO THE OPENING USING AN APPROVED NONSHRINK GROUT FOR THE FULL MANHOLE WALL THICKNESS. THE EXTERIOR OF THE COMPLETED CONNECTION SHALL BE SEALED WITH AN APPROVED BITUMINOUS COATING SUCH THAT THE CONNECTION WILL BE WATER TIGHT. FLOOR OF MANHOLE SHALL BE MODIFIED TO FORM NEW FLOW CHANNEL FOR THE NEW CONNECTION AS INDICATED BY THE DRAWING. THIS WORK, INCLUDING MODIFICATION OF MANHOLE FLOOR, SHALL BE PAID FOR AT THE UNIT PRICE BID FOR OUTSIDE DROP STACK CONSTRUCTED ON EXISTING MANHOLE.
13. THE FLOORS OF ALL MANHOLES SHALL BE SHAPED WITH FLOW CHANNELS SUCH THAT THE MANHOLES WILL BE SELF CLEANING AND FREE OF AREAS WHERE SOLIDS COULD BE DEPOSITED AS SEWAGE FLOWS THROUGH THE MANHOLE FROM ALL INLET PIPES TO THE OUTLET PIPE. FLOW CHANNELS SHALL BE FORMED TO MATCH THE BOTTOM HALVES OF THE INFLOWING PIPES AND THE OUTFLOWING PIPE AS SHOWN BY THE DRAWINGS EXCEPT FOR INSIDE DROP MANHOLES. FLOW CHANNELS FOR INSIDE DROP MANHOLES SHALL BE CONSTRUCTED AS INDICATED BY THE DRAWING. MANHOLE FLOORS SHALL HAVE SLOPES OF 3 INCHES PER FOOT IN THE AREAS OUTSIDE OF THE FLOW CHANNELS SLOPED TOWARD THE FLOW CHANNELS. PIPES LAID THROUGH MANHOLES SHALL HAVE THE TOP HALF REMOVED TO NEAT LINES FOR THE FULL INSIDE DIAMETER OF THE MANHOLE. MANHOLE FLOORS SHALL THEN BE SHAPED AROUND THE BOTTOM HALF OF THE PIPE WHICH FORMS THE FLOW CHANNEL.
14. PIPES INSTALLED WITHIN THE EXCAVATION MADE FOR THE MANHOLE SHALL BE CRADLED WITH CONCRETE TO THE LIMITS OF THE MANHOLE EXCAVATION. WHEN CLAY PIPE IS USED, THE CRADLE SHALL EXTEND TO THE FIRST JOINT OUTSIDE THE MANHOLE. THE CRADLE SHALL BE TERMINATED AT THE CLAY PIPE JOINT IN A MANNER WHICH WILL MAINTAIN THE FLEXIBILITY OF THE JOINT. COST OF CRADLE WITHIN MANHOLE EXCAVATION OR TO CLAY PIPE JOINTS ADJACENT TO MANHOLE SHALL BE INCLUDED IN THE UNIT PRICE BID FOR THE MANHOLE.
15. MANHOLE COVER CASTINGS AND MANHOLE FRAME CASTINGS SHALL CONFORM TO THE REQUIREMENTS AS INDICATED IN THE STANDARD SPECIFICATIONS AND AS SHOWN IN THE STANDARD DETAIL DRAWING.
16. THE VERTICAL DROP IN INSIDE DROP MANHOLES SHALL NOT EXCEED 2' FOR INFLOWING PIPES SIZED 12" OR SMALLER AND 2" FOR INFLOWING PIPES LARGER THAN 12". THE CROWNS OF INFLOWING PIPES SHALL NEVER BE SET LOWER THAN THE CROWN OF THE OUTFLOWING PIPE.
17. STANDARD MANHOLES AND STANDARD INSIDE DROP MANHOLES SHALL BE BID AS STANDARD MANHOLES FOR THE TYPE AND DIAMETER INDICATED. OUTSIDE DROP MANHOLES SHALL BE BID AS STANDARD OUTSIDE DROP MANHOLES FOR THE TYPE AND DIAMETER INDICATED. ALL MANHOLE DIAMETERS WILL BE 4' UNLESS INDICATED OTHERWISE.
18. A BRICK MASONRY COLLAR SHALL BE INSTALLED BETWEEN THE CAST IRON FRAME AND THE CONCENTRIC CONE. THE COLLAR WILL HAVE 8" WALLS AND A VERTICAL HEIGHT OF 6" MINIMUM AND 18" MAXIMUM. A 1" COAT OF MORTAR WILL BE PLASTERED ON THE OUTSIDE OF THE COLLAR. THE USE OF PRE-CAST CONCRETE SPACERS FOR MANHOLE TOP ADJUSTMENT IS ALSO ALLOWED.

THE CITY OF WICHITA

CITY ENGINEER'S OFFICE
CITY HALL - SEVENTH FLOOR
455 NORTH MAIN STREET
WICHITA, KANSAS 67202
(316) 268-4501
(316) 268-4114 FAX

STANDARD TYPE 'P' MANHOLES

M. E. LINDEBAK P.E. - CITY ENGINEER

PROJECT NUMBER	OCA #
468-82834	623322
DATE MAR 96	SHEET 14 OF 16

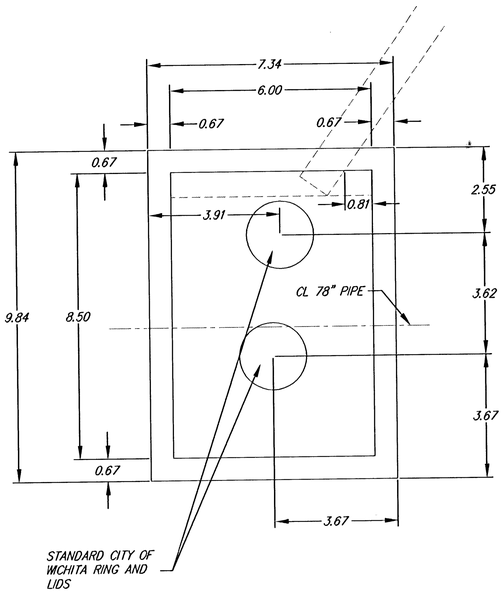

SECTION A-A

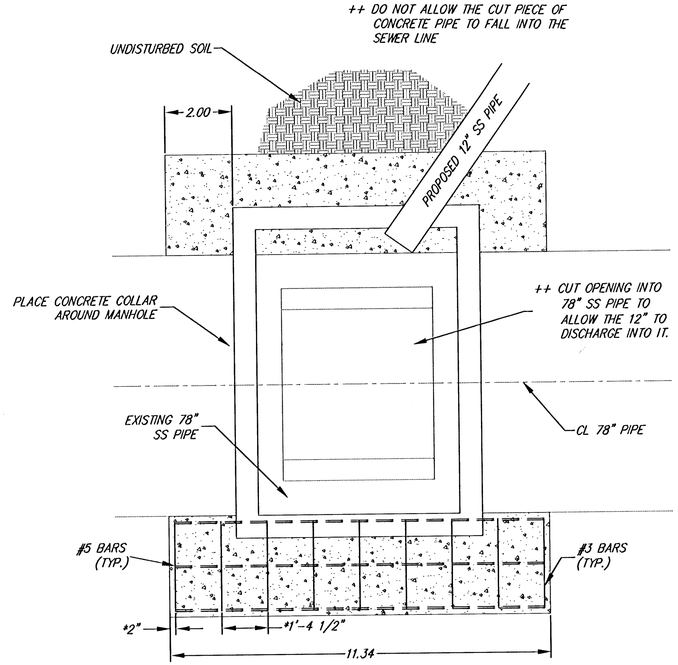

* TYPICAL DIMENSIONS FOR BOTH FOOTINGS

SECTION B-B

GENERAL NOTES

1. GENERAL NOTES FROM THE CITY OF WICHITA STANDARD TYPE 'P' MANHOLES SHALL APPLY FOR THIS MANHOLE.
2. IF USING A PRE-CAST MANHOLE, WALL THICKNESS MAY BE ADJUSTED PER MANUFACTURERS RECOMMENDATION AND APPROVED BY THE CITY ENGINEER.
3. THE CUT PIECE OF 78" CONCRETE PIPE SHALL BE DISPOSED OF PROPERLY.
4. CONCRETE FOOTINGS SHALL BE PLACED ON UNDISTURBED SOIL.
5. CONCRETE FOR THE FOOTINGS SHALL HAVE A MINIMUM COMPRESSIVE STRENGTH OF 4000 P.S.I.
6. STEEL REINFORCING (REBAR) USED IN CONCRETE FOOTING SHALL BE EPOXY COATED.
7. COAT INTERIOR MANHOLE WALLS WITH 'RAVEN' COATING. (THIS MANHOLE ONLY)
8. FORM A THREE INCH (3") DEEP KEYWAY IN BOTH FOOTINGS TO SET PRECAST MANHOLE IN.
9. PLACE A CONCRETE COLLAR AROUND PERIMETER OF MANHOLE.

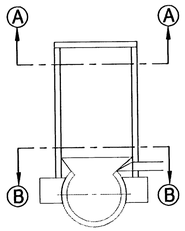

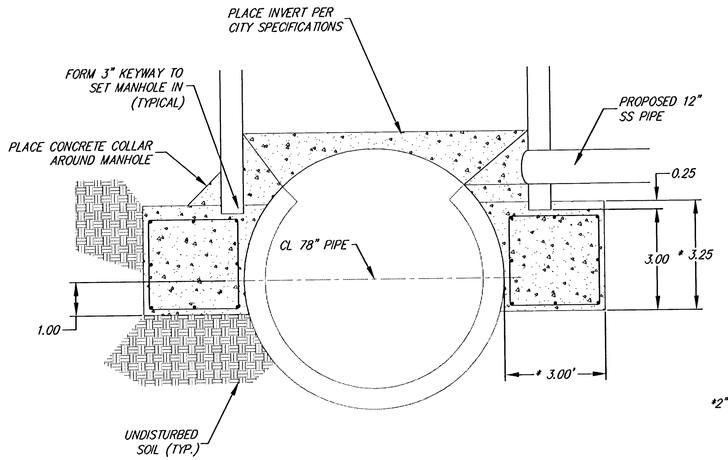

SECTION C-C

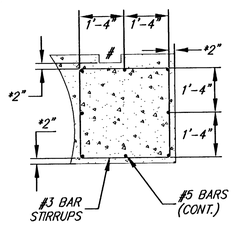

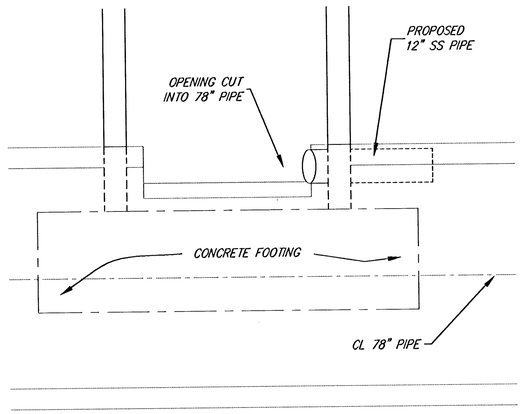

SECTION D-D

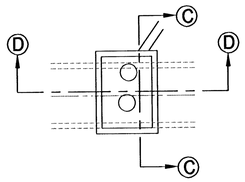

* DENOTES MINIMUM WIDTH AND HEIGHT OF FOOTING. PLACE FOOTING AGAINST UNDISTURBED SOIL.

* 2" CLEARANCE FROM FACE OF CONCRETE TO FACE OF REBAR.

# DENOTES 3" DEEP KEYWAY TO BE PLACED IN EACH FOOTING.

SEWAGE TREATMENT PLANT #1 - N. OF PAWNEE

RECONSTRUCTION OF PART OF SS NO. 22

SQUARE MANHOLE

SRB 924 NORTH MAIN WICHITA, KANSAS 67203 http://www.feist.com/~srb
316-264-8008 FAX 264-4621 E-mail: srb@feist.com
SAVOY, RUGGLES & BOHM, P. A.
ENGINEERING & SURVEYING

PROJECT NUMBER 468-82834 (623322)

DESIGN	DRAWN	UTILITY	REVIEW	DATE	REVISED
MWS	MWS		JR	01/24/00	03/15/00

SRB JOB 1300X

SHEET 15 OF 16

DWG FILE Overflow.dwg

MANHOLE FRAME AND COVER DETAIL

ADOPTED AS STANDARD DESIGN BY
CITY OF WICHITA, KANSAS

MANHOLE COVER
Weight = 180 Lbs.

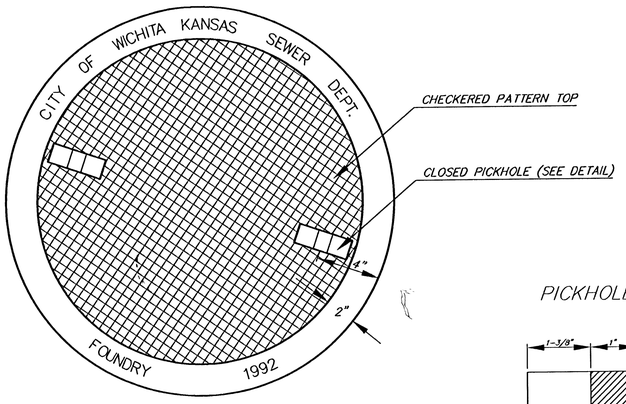

TOP VIEW

PICKHOLE DETAIL

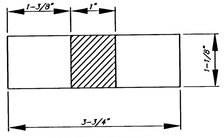

TOP VIEW

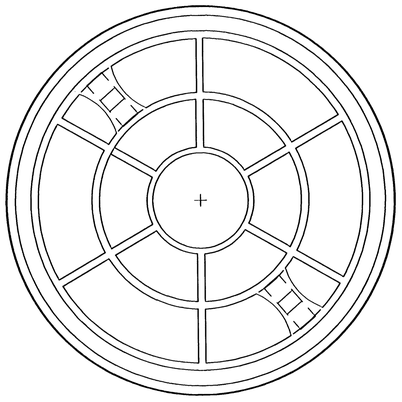

BOTTOM VIEW

SECTION VIEW

MANHOLE FRAME
Weight = 240 Lbs.

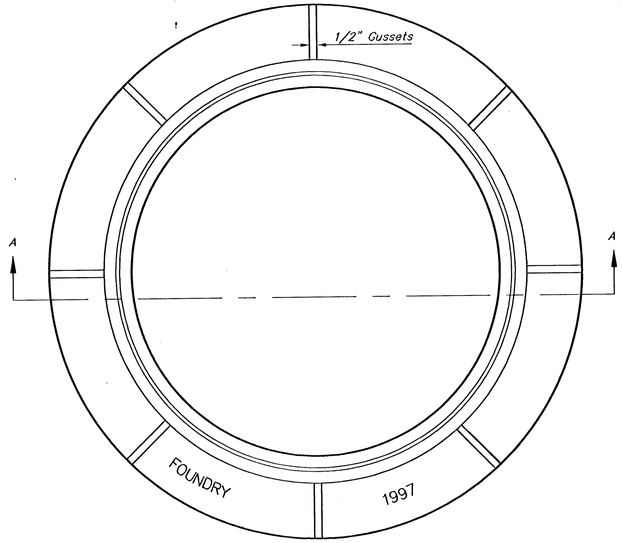

TOP VIEW

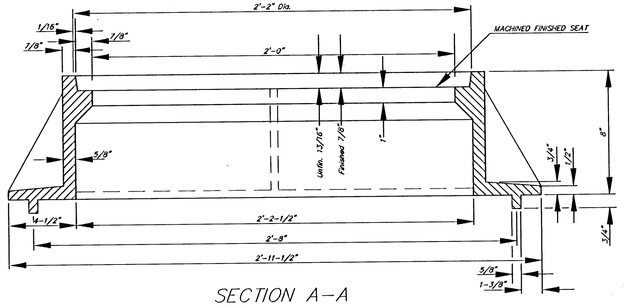

SECTION A–A
MUD RING

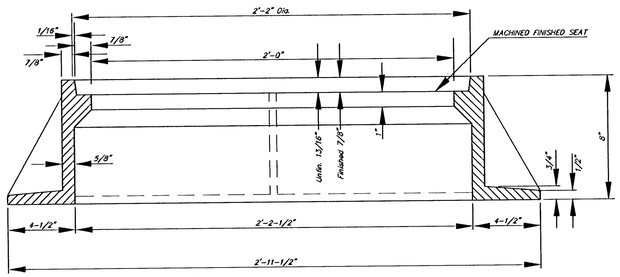

SECTION A–A

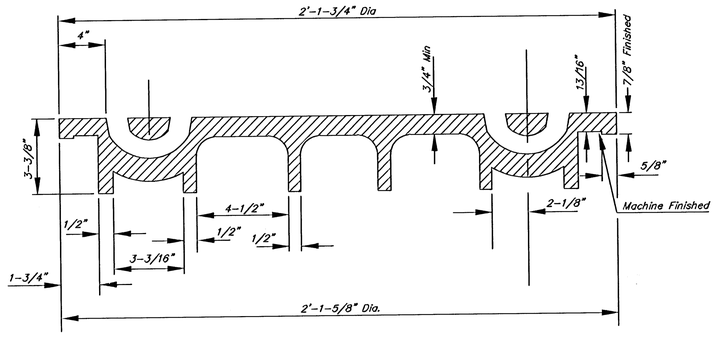

SECTION VIEW

GENERAL NOTES

1. MANHOLE CASTINGS SHALL BE MANUFACTURED USING GOOD QUALITY GRAY IRON CONFORMING TO CLASS 30 OF A.S.T.M. DESIGNATION A-48. DIMENSIONS AND WEIGHTS SHOWN ON THE DETAILED DRAWINGS SHALL BE CONSIDERED AS MINIMUM REQUIREMENTS AND ANY DEVIATIONS FROM THE DIMENSIONS SHOWN MUST BE SPECIFICALLY APPROVED. THE FINISHED CASTINGS SHALL BE OF UNIFORM QUALITY, FREE FROM BLOWHOLES, POROSITY, HARD SPOTS, SHRINKAGE DISTORTIONS OR OTHER DEFECTS.

2. MANHOLE CASTINGS SHALL WEIGH A MINIMUM OF 180 POUNDS ON THE SOLID COVER AND 240 POUNDS ON THE MANHOLE RING. THIS IS A TOTAL OF 420 POUNDS ON A RING AND COVER SET. CASTINGS WEIGHING LESS THAN THE MINIMUM SPECIFICATIONS WILL NOT BE ACCEPTED.

3. MANHOLE CASTINGS SHALL BE MANUFACTURED SUCH THAT A COVER MANUFACTURED BY ANY ONE FOUNDARY WILL FIT INTERCHANGEABLY INTO A FRAME MANUFACTURED BY ANOTHER FOUNDRY AND STILL MEET ALLOWABLE CLEARANCES AND NON-ROCKING REQUIREMENTS. THIS WILL REQUIRE MANUFACTURING OF THE MATCHING FACES ON THE COVER AND THE FRAME TO CLOSE TOLERANCES.

4. THE OUTSIDE CIRCUMFERENCE OF THE VERTICAL FACE OF THE COVER AND THE INSIDE CIRCUMFERENCE OF THE VERTICAL FACE IN THE FRAME RECESS SHALL BE MANUFACTURED TO TOLERANCES SUCH THAT THE CLEARANCE BETWEEN THE COVER AND FRAME WILL NOT EXCEED 1/8" AT ANY POINT AROUND THE CIRCUMFERENCE OF THE COVER. THE SEATING SURFACES BETWEEN THE COVER AND FRAME SHALL BE MACHINED SUCH THAT THESE SEATING SURFACES SHALL MAKE FULL CONTACT FOR THEIR FULL CIRCUM-FERENCE TO PRECLUDE THE COVER FROM ROCKING IN THE FRAME.

5. THE MANHOLE FRAME AND COVER SHALL BE MARKED WITH LETTERING INDICATING THE NAME OF THE MANUFACTURER AND THE YEAR WHEN THE COVER OR FRAME WAS CAST. THE COVER SHALL BE FURTHER IDENTIFIED WITH REGARDS TO OWNERSHIP USING LETTERS AT LEAST 1 INCH IN HEIGHT. THIS IDENTIFICATION SHALL BE "CITY OF WICHITA SEWER DEPARTMENT". THE WORD DEPARTMENT MAY BE ABBREVIATED. THE TEXTURE OF THE TOP SURFACE OF THE COVER SHALL BE MANUFACTURED IN A CHECKERED PATTERN DESIGN AS INDICATED ON THE DRAWINGS. SMOOTH BLOCKOUTS SHALL BE UTILIZED TO HIGHLIGHT THE LETTERING ON THE COVER SURFACE. THE TOTAL AREA OF SMOOTH SURFACE BLOCKOUT SHALL NOT EXCEED THE AREA AS INDICATED ON THE DRAWNG. POSITIONING OF SMOOTH BLOCKOUTS AND LETTERING MAY VARY FROM THAT SHOWN ON THE DETAILED DRAWING.

THE CITY OF WICHITA

CITY ENGINEER'S OFFICE
CITY HALL – SEVENTH FLOOR
455 NORTH MAIN STREET
WICHITA, KANSAS 67202
(316) 268-4501
(316) 268-4114 FAX

MANHOLE FRAME AND COVER

M. E. LINDEBAK P.E. – CITY ENGINEER

PROJECT NUMBER	OCA #
468-82834	623322
DATE MAR 96	SHEET 16 OF 16

S8-05-04-08