LATERAL 183, SOUTHWEST INTERCEPTOR SEWER

PROJ. NO. 468-81332

INDEX NO. 742627

CITY OF WICHITA, KANSAS

M. E. LINDEBAK - CITY ENGINEER

GENERAL NOTES:

1. ALL CONSTRUCTION AND MATERIAL TO COMPLY WITH CITY OF WICHITA SPECIFICATIONS AND STANDARDS.
2. THE CONTRACTOR SHALL NOTIFY THE UTILITY SERVICE COMPANIES TO FLAG THEIR UNDERGROUND LINES AND REQUEST ANY OVERHEAD POLE/LINE ADJUSTMENTS 48 HOURS PRIOR TO CONSTRUCTION.

   KANSAS ONE-CALL 1-800-344-7233
3. THE UNDERGROUND UTILITY SERVICE LINES AND OVERHEAD UTILITY POLE LINES ARE TO BE ADJUSTED AS NECESSARY BY OTHERS PRIOR TO CONSTRUCTION UNLESS THE PLANS SPECIFICALLY CALL FOR THEIR ADJUSTMENT BY THE CONTRACTOR. EXISTING UTILITIES AND THEIR LOCATION, AS SHOWN ON THE PLANS, REPRESENT THE BEST INFORMATION OBTAINABLE FOR DESIGN. LOCATION INFORMATION HAS BEEN OBTAINED FROM THE VARIOUS UTILITY COMPANIES AND IS EITHER FROM COMPANY RECORD DRAWINGS OR COMPANY PROVIDED FIELD LOCATIONS. THE CONTRACTOR WILL BE REQUIRED TO WORK AROUND EXISTING UTILITIES WITHIN THE RIGHT-OF-WAY WHICH DO NOT CONFLICT WITH PROPOSED CONSTRUCTION.
4. THE CONTRACTOR SHALL GIVE ALL PROPERTY OWNERS AND/OR TENANTS DIRECTLY AFFECTED BY THE CONSTRUCTION OF THIS PROJECT A MINIMUM OF FIVE (5) DAYS ADVANCE WRITTEN NOTICE PRIOR TO START OF CONSTRUCTION.
5. ANY TREE OR SHRUB REMOVAL MUST BE APPROVED BY THE FIELD ENGINEER.
6. THE CONTRACTOR SHOULD EXAMINE THE CONSTRUCTION SITE PRIOR TO BIDDING AND BE SATIISFIED AS TO THE WORK SHOWN FOR COMPLETION.
7. ANY FENCE REMOVED DURING CONSTRUCTION MUST BE REPLACED AND RESTORED TO ORIGINAL CONDITION.
8. UTILITY EASEMENT AND FENCE RESTORATION SHALL BE SUSPENDED FOR THREE WEEKS FROM THE DATE THE SEWER IS TESTED AND ACCEPTED BY THE ENGINEERING DIVISION, DEPARTMENT OF PUBLIC WORKS, TO ALLOW PROPERTY OWNERS TIME TO INSTALL HOOKUPS TO THE SEWER MAIN. CONTRACTORS SHALL NOTIFY PROPERTY OWNERS, IN WRITING, OF THIS AGGREMENT.

INDEX OF SHEETS

SHEET	1	–	TITLE SHEET
SHEET	2-3	–	PLAN/PROFILE
SHEET	4	–	MANHOLE DETAIL

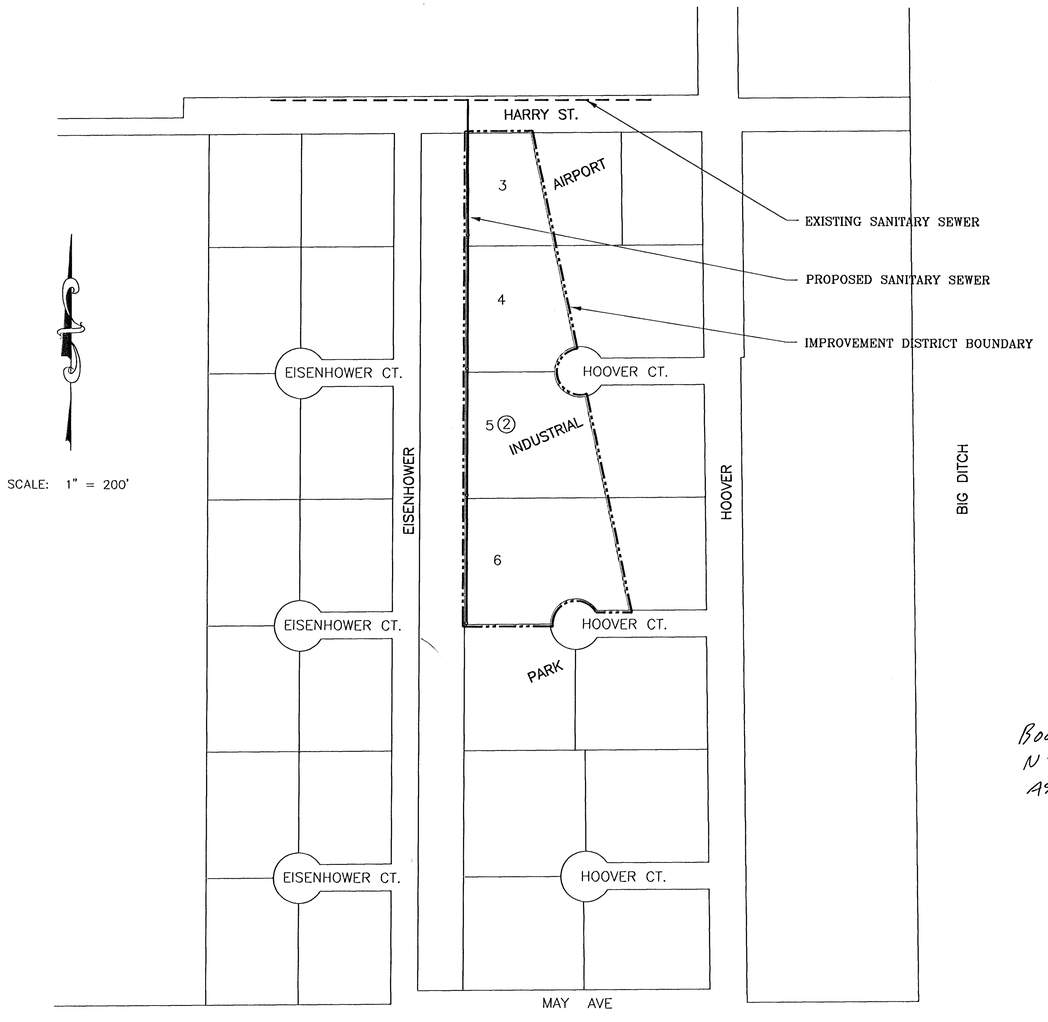

SCALE: 1" = 200'

Booked
N-264
AS BUILT
RDL

ROBERT A. FOUNKEN
LICENSED
6201
PROFESSIONAL ENGINEER

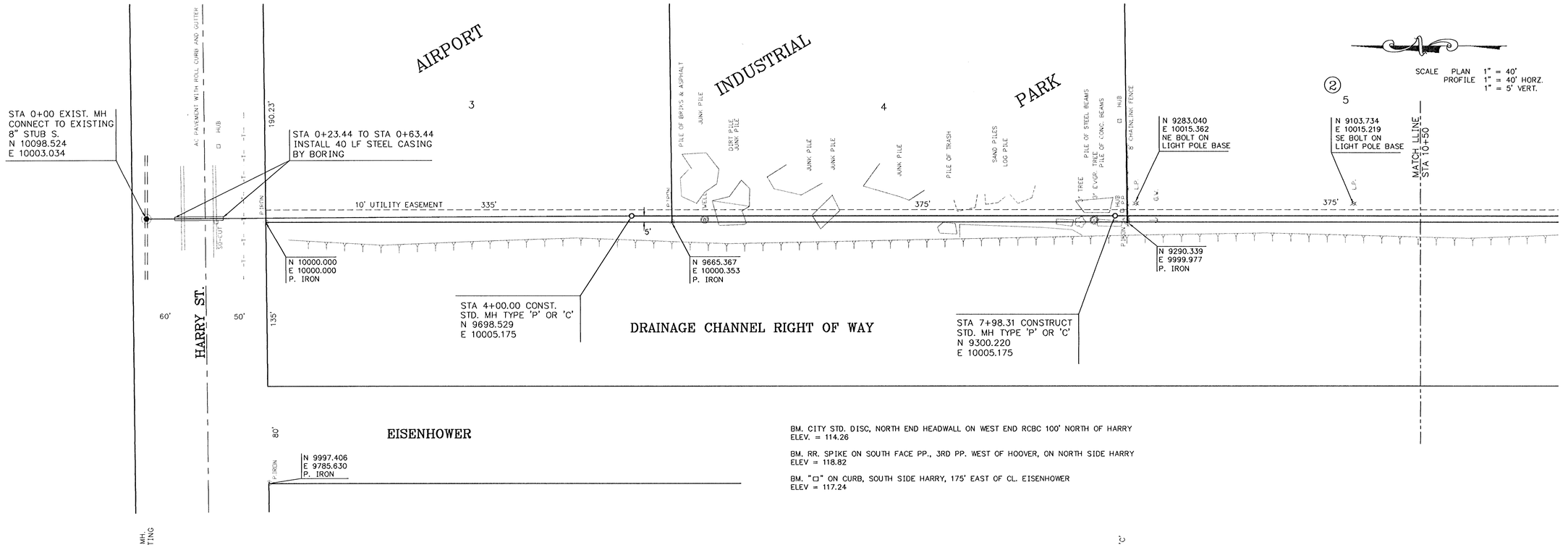

BM. CITY STD. DISC, NORTH END HEADWALL ON WEST END RCBC 100' NORTH OF HARRY
ELEV. = 114.26

BM. RR. SPIKE ON SOUTH FACE PP., 3RD PP. WEST OF HOOVER, ON NORTH SIDE HARRY
ELEV = 118.82

BM. "□" ON CURB, SOUTH SIDE HARRY, 175' EAST OF CL. EISENHOWER
ELEV = 117.24

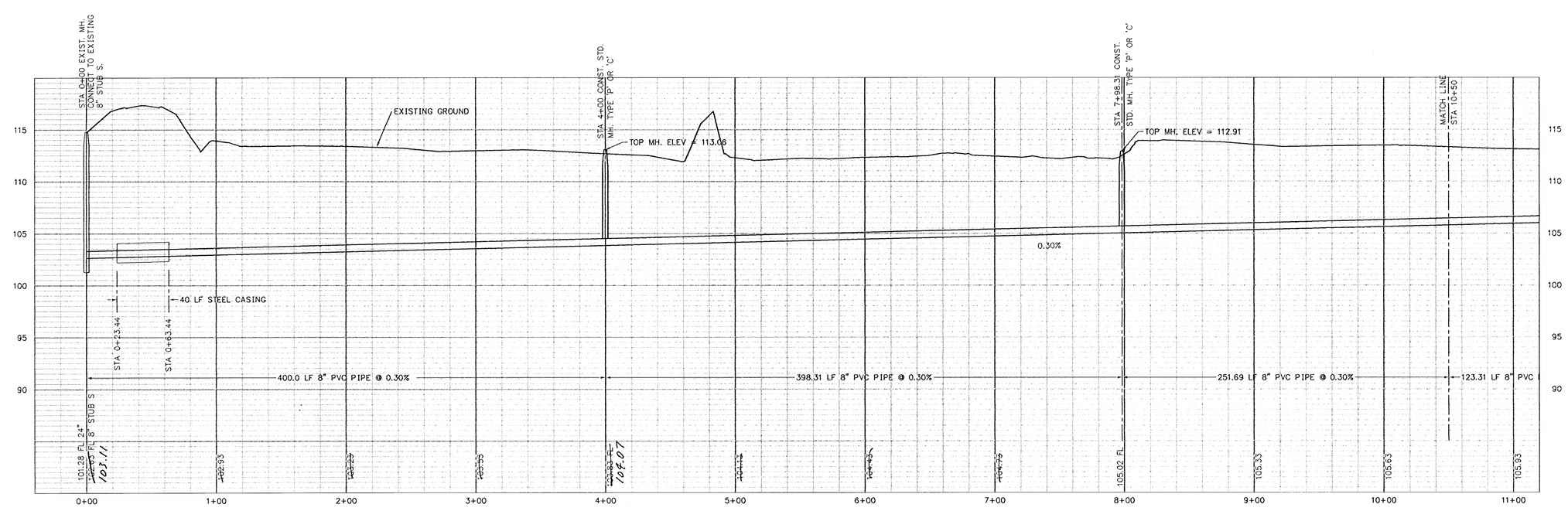

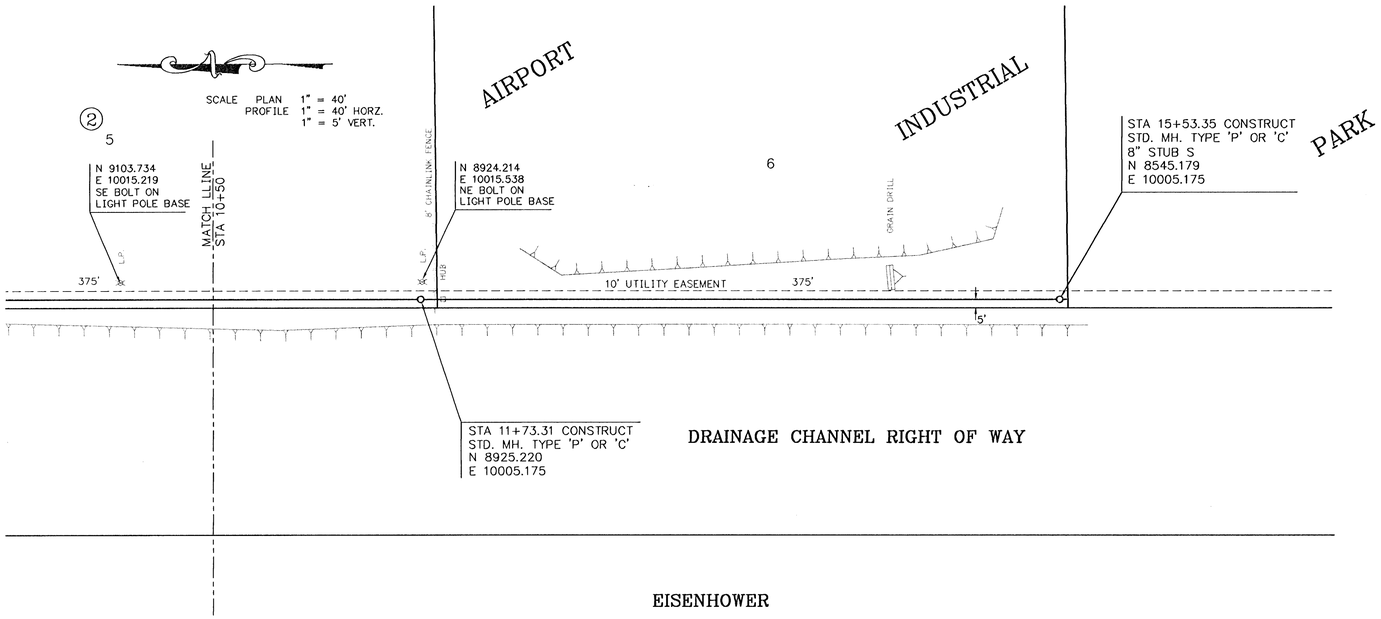

SCALE PLAN 1" = 40'
PROFILE 1" = 40' HORZ.
1" = 5' VERT.
AIRPORT
INDUSTRIAL
PARK
N 9103.734
E 10015.219
SE BOLT ON
LIGHT POLE BASE
MATCH LLINE
STA 10+50
N 8924.214
E 10015.538
NE BOLT ON
LIGHT POLE BASE
STA 15+53.35 CONSTRUCT
STD. MH. TYPE 'P' OR 'C'
8" STUB S
N 8545.179
E 10005.175
375'
10' UTILITY EASEMENT
375'
5'
STA 11+73.31 CONSTRUCT
STD. MH. TYPE 'P' OR 'C'
N 8925.220
E 10005.175
DRAINAGE CHANNEL RIGHT OF WAY
EISENHOWER

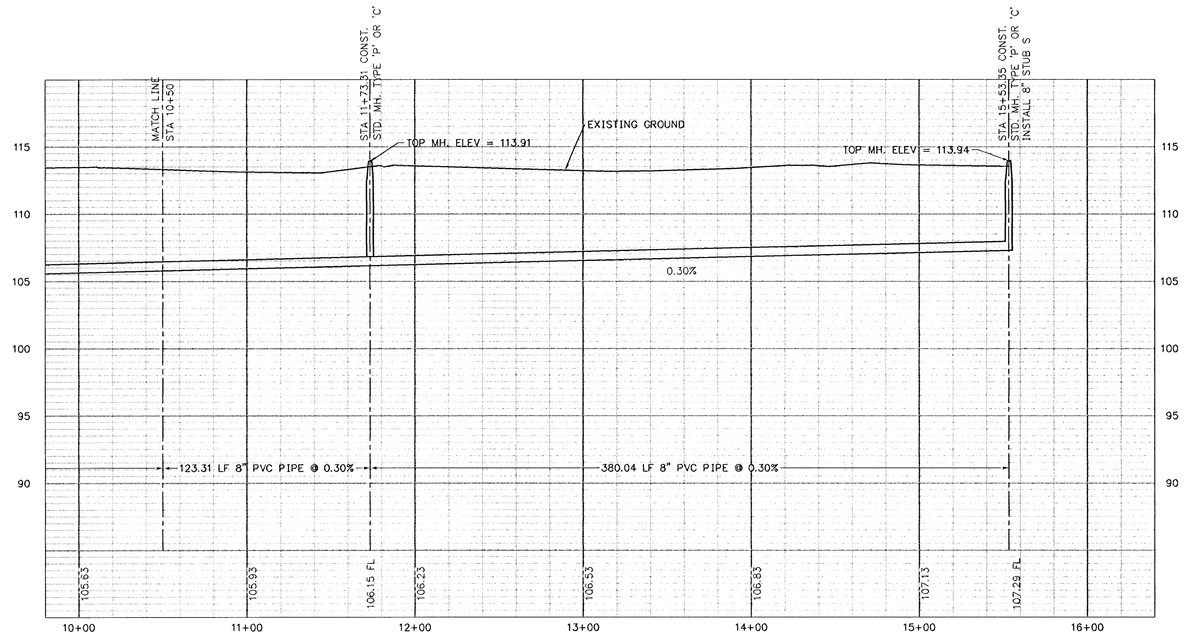

MATCH LINE
STA 10+50
STA 11+73.31 CONST.
STD. MH. TYPE 'P' OR 'C'
STA 15+53.35 CONST.
STD. MH. TYPE 'P' OR 'C'
INSTALL 8" STUB S
EXISTING GROUND
TOP MH. ELEV = 113.91
TOP MH. ELEV = 113.94
0.30%
123.31 LF 8" PVC PIPE @ 0.30%
380.04 LF 8" PVC PIPE @ 0.30%
115
110
105
100
95
90
105.63
105.93
106.15 FL
106.23
106.53
106.83
107.13
107.29 FL
10+00
11+00
12+00
13+00
14+00
15+00
16+00

SEWER APPURTENANCES DETAILS

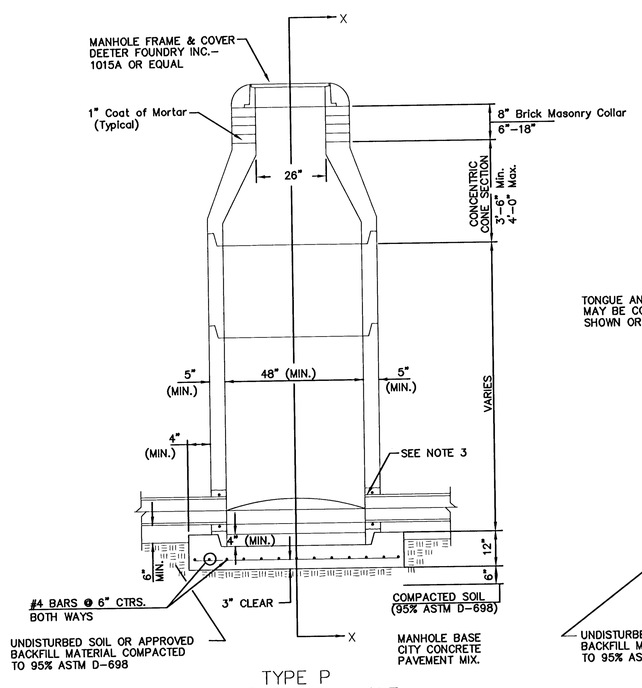

TYPE P
STANDARD MANHOLE

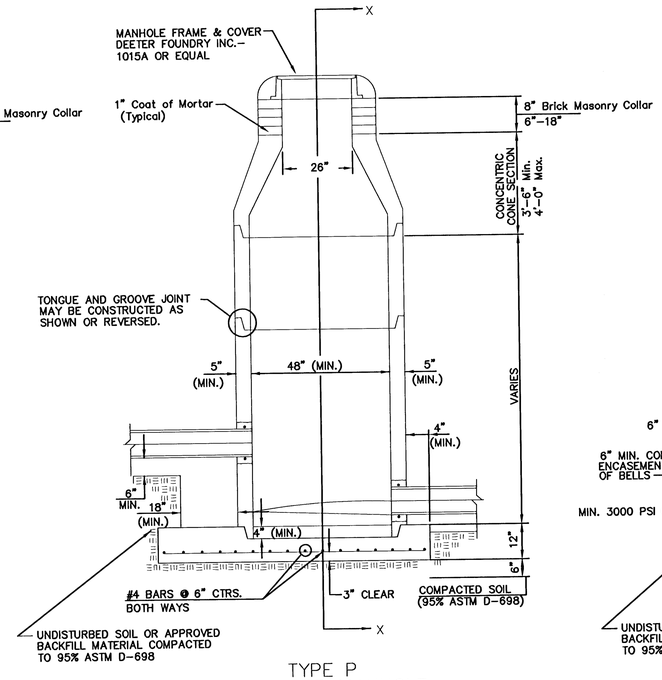

TYPE P
INSIDE DROP MANHOLE

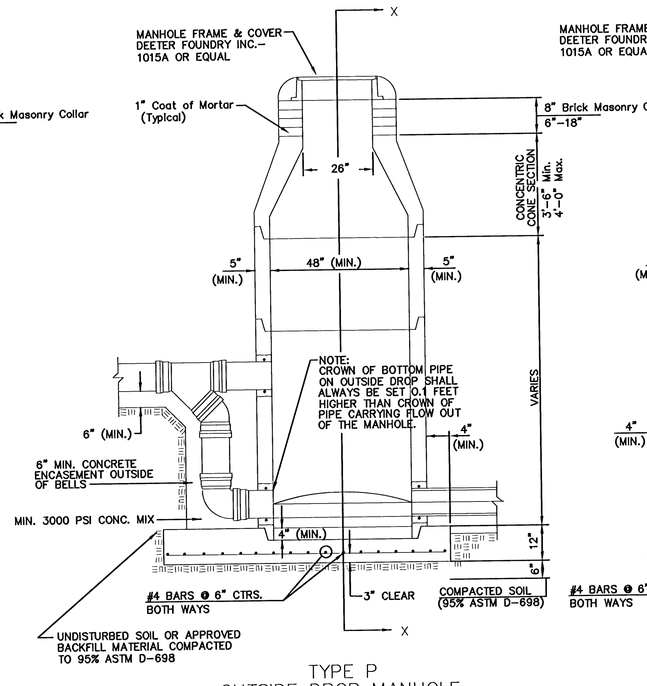

TYPE P
OUTSIDE DROP MANHOLE

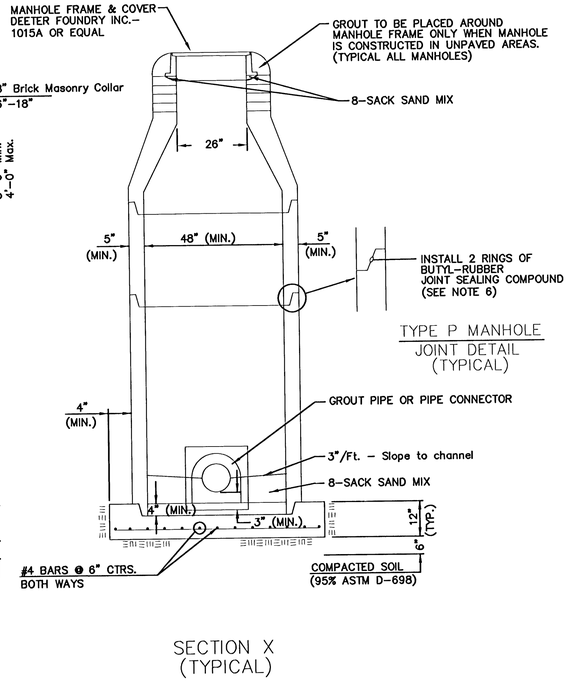

SECTION X
(TYPICAL)

GENERAL NOTES

PRECAST MANHOLE NOTES

1. ALL PRECAST CONCRETE MANHOLE SECTIONS SHALL CONFORM TO THE LATEST REVISIONS OF A.S.T.M. C478 AS MODIFIED BY THE SPECIFICATIONS.
2. NON–SHRINK GROUT SHALL BE NON–METALLIC TYPE.
3. APPROVED FLEXIBLE WATERSTOP GASKETS SHALL BE INSTALLED TO JOIN THE SEWER TO THE MANHOLE WALL WHEN A.B.S. COMPOSITE PIPE OR P.V.C. PIPE IS USED. FOR OTHER TYPES OF PIPE THE SEWER SHALL BE GROUTED IN PLACE WITH NON–SHRINK GROUT. THE SEWER PIPE SHALL BE SUPPORTED WITH CONCRETE ENCASEMENT A MINIMUM OF 3 FEET FROM THE MANHOLE WALL AND TO THE FIRST JOINT FOR V.C.P. SUCH THAT THE JOINT REMAINS FLEXIBLE.
4. ALL INSIDE SURFACES OF THE CONCRETE MANHOLE WHICH WOULD BE EXPOSED TO SEWER GAS SHALL BE COATED WITH 2 COATS TNEMEC SERIES 66 HI–BUILD EPOXOLINE, DRY THICKNESS OF 8 MILS (MIN.)
5. EXTERIOR MANHOLE WALLS SHALL BE COATED WITH 1 COAT MOBILARMA 633 BITUMINOUS COATING.
6. JOINT SEALING COMPOUND SHALL BE KENT SEAL NO. 2 OR APPROVED EQUAL.
7. PRECAST MANHOLES SHALL BE SET AT LEAST 4 INCHES INTO THE MANHOLE BASE.
8. TOP OF MANHOLE FLOOR SLAB SHALL BE AT LEAST 3 INCHES BELOW THE FLOW LINE OF THE OUTLET PIPE TO INSURE SUFFICIENT MINIMUM THICKNESS OF SHAPED INVERT.
9. LIFTING HOLES SHALL BE FILLED WITH NON–SHRINK GROUT AND THE INTERIOR SURFACE COATED AS SPECIFIED.
10. MORTAR USED IN MASONRY CONSTRUCTION SHALL CONTAIN 8 SACKS OF CEMENT PER CUBIC YARD. CONCRETE USED IN MANHOLE BASES SHALL CONFORM TO THE REQUIREMENTS OF CONCRETE FOR CONCRETE PAVEMENT CONSTRUCTION AS SPECIFIED IN THE CITY STANDARD PAVING SPECIFICATIONS USING CITY CONCRETE PAVEMENT MIX WITHOUT AIR ENTRAINING ADMIXTURE. MORTAR SHALL BE PLACED AROUND THE MANHOLE RING AS SHOWN ON THE DRAWINGS WHEN MANHOLES ARE CONSTRUCTED IN UNPAVED AREAS. MANHOLES CONSTRUCTED WHERE PIPE SIZES ARE SMALLER THAN 24" SHALL HAVE AN INSIDE DIAMETER OF 4'. MANHOLES CONSTRUCTED WHERE PIPE SIZES ARE 24" OR LARGER SHALL HAVE AN INSIDE DIAMETER OF 5'. COMPLETED MANHOLE SHALL BE WITHOUT LEAKS AND WATER TIGHT.
11. REINFORCING STEEL SHALL BE INSTALLED IN THE MANHOLE BASES AND SHALL CONSIST OF NO. 4 BARS PLACED ON 6" CENTERS IN BOTH DIRECTIONS. THE MANHOLE BASE REINFORCEMENT SHALL BE PLACED AT LEAST 3" ABOVE THE BOTTOM OF THE MANHOLE BASE. ALL COSTS FOR FURNISHING AND INSTALLING REINFORCING STEEL SHALL BE INCLUDED IN THE UNIT PRICE BID FOR THE MANHOLE.
12. OPENINGS SHALL BE CUT INTO THE MANHOLE WALL WHEN OUTSIDE DROPS ARE CONSTRUCTED ON EXISTING MANHOLES. SUCH OPENINGS CUT INTO EXISTING MANHOLES SHALL BE AS SMALL AS PRACTICAL TO FACILITATE INSTALLING AND GROUTING THE NEW PIPE IN PLACE. WATERSTOP GASKETS SHALL BE USED WITH P.V.C. AND A.B.S. COMPOSITE PIPE. THE NEW PIPE SHALL BE GROUTED INTO THE OPENING USING AN APPROVED NONSHRINK GROUT FOR THE FULL MANHOLE WALL THICKNESS. THE EXTERIOR OF THE COMPLETED CONNECTION SHALL BE SEALED WITH AN APPROVED BITUMINOUS COATING SUCH THAT THE CONNECTION WILL BE WATER TIGHT. FLOOR OF MANHOLE SHALL BE MODIFIED TO FORM NEW FLOW CHANNEL FOR THE NEW CONNECTION AS INDICATED BY THE DRAWING. THIS WORK, INCLUDING MODIFICATION OF MANHOLE FLOOR, SHALL BE PAID FOR AT THE UNIT PRICE BID FOR OUTSIDE DROP STACK CONSTRUCTED ON EXISTING MANHOLE.
13. THE FLOORS OF ALL MANHOLES SHALL BE SHAPED WITH FLOW CHANNELS SUCH THAT THE MANHOLES WILL BE SELF CLEANING AND FREE OF AREAS WHERE SOLIDS COULD BE DEPOSITED AS SEWAGE FLOWS THROUGH THE MANHOLE FROM ALL INLET PIPES TO THE OUTLET PIPE. FLOW CHANNELS SHALL BE FORMED TO MATCH THE BOTTOM HALVES OF THE INFLOWING PIPES AND THE OUTFLOWING PIPE AS SHOWN BY THE DRAWINGS EXCEPT FOR INSIDE DROP MANHOLES. FLOW CHANNELS FOR INSIDE DROP MANHOLES SHALL BE CONSTRUCTED AS INDICATED BY THE DRAWING. MANHOLE FLOORS SHALL HAVE SLOPES OF 3 INCHES PER FOOT IN THE AREAS OUTSIDE OF THE FLOW CHANNELS SLOPED TOWARD THE FLOW CHANNELS. PIPES LAID THROUGH MANHOLES SHALL HAVE THE TOP HALF REMOVED TO NEAT LINES FOR THE FULL INSIDE DIAMETER OF THE MANHOLE. MANHOLE FLOORS SHALL THEN BE SHAPED AROUND THE BOTTOM HALF OF THE PIPE WHICH FORMS THE FLOW CHANNEL.
14. PIPES INSTALLED WITHIN THE EXCAVATION MADE FOR THE MANHOLE SHALL BE CRADLED WITH CONCRETE TO THE LIMITS OF THE MANHOLE EXCAVATION. WHEN CLAY PIPE IS USED, THE CRADLE SHALL EXTEND TO THE FIRST JOINT OUTSIDE THE MAHOLE. THE CRADLE SHALL BE TERMINATED AT THE CLAY PIPE JOINT IN A MANNER WHICH WILL MAINTAIN THE FLEXIBILITY OF THE JOINT. COST OF CRADLE WITHIN MANHOLE EXCAVATION OR TO CLAY PIPE JOINTS ADJACENT TO MANHOLE SHALL BE INCLUDED IN THE UNIT PRICE BID FOR THE MANHOLE.
15. MANHOLE COVER CASTINGS AND MANHOLE FRAME CASTINGS SHALL CONFORM TO THE REQUIREMENTS AS INDICATED IN THE STANDARD SPECIFICATIONS AND AS SHOWN IN THE STANDARD DETAIL DRAWING.
16. THE VERTICAL DROP IN INSIDE DROP MANHOLES SHALL NOT EXCEED 2' FOR INFLOWING PIPES SIZED 12" OR SMALLER AND 2' FOR INFLOWING PIPES LARGER THAN 12". THE CROWNS OF INFLOWING PIPES SHALL NEVER BE SET LOWER THAN THE CROWN OF THE OUTFLOWING PIPE.
17. STANDARD MANHOLES AND STANDARD INSIDE DROP MANHOLES SHALL BE BID AS STANDARD MANHOLES FOR THE TYPE AND DIAMETER INDICATED. OUTSIDE DROP MANHOLES SHALL BE BID AS STANDARD OUTSIDE DROP MANHOLES FOR THE TYPE AND DIAMETER INDICATED. ALL MANHOLE DIAMETERS WILL BE 4' UNLESS INDICATED OTHERWISE.
18. A BRICK MASONRY COLLAR SHALL BE INSTALLED BETWEEN THE CAST IRON FRAME AND THE CONCENTRIC CONE. THE COLLAR WILL HAVE 8" WALLS AND A VERTICAL HEIGHT OF 6" MINIMUM AND 18" MAXIMUM. A 1" COAT OF MORTAR WILL BE PLASTERED ON THE OUTSIDE OF THE COLLAR. THE USE OF PRE–CAST CONCRETE SPACERS FOR MANHOLE TOP ADJUSTMENT IS ALSO ALLOWED.

THE CITY OF WICHITA

CITY ENGINEER'S OFFICE
CITY HALL – SEVENTH FLOOR
455 NORTH MAIN STREET
WICHITA, KANSAS 67202
(316) 268–4501
(316) 268–4114 FAX

STANDARD TYPE 'P' MANHOLES

M. E. LINDEBAK P.E. – CITY ENGINEER

PROJECT NUMBER	INDEX CODE
468–81332	742627
DATE: MAR 96	SHEET 4 OF 4

58-04-03-03 MS