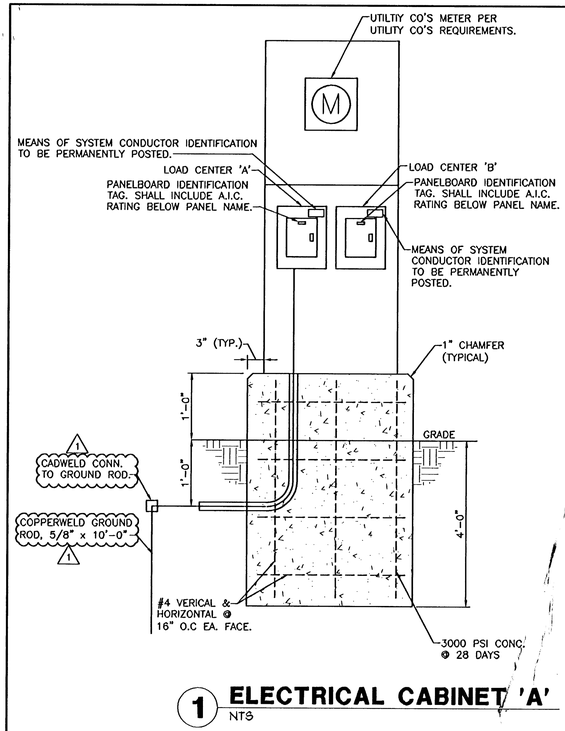

1 ELECTRICAL CABINET 'A'
NTS

SYSTEM CONDUCTOR IDENTIFICATION 277/480V.,3Ø,4W

A-PHASE - YELLOW
B-PHASE - BROWN
C-PHASE - ORANGE
NEUTRAL - GRAY
GROUND - GREEN

SYSTEM CONDUCTOR IDENTIFICATION 120/240V.,1Ø,3W

A-PHASE - BLACK
B-PHASE - RED
NEUTRAL - WHITE
GROUND - GREEN

CONDUCTOR I.D. NOTES:

1. 3"X 3-1/2" NAMEPLATES TO BE INSTALLED PER N.E.C.-210-4D WITH 1/4" LETTERS ON WHITE BACKGROUND; FIELD RIVET TO PANEL COVER IN UPPER RIGHT HAND CORNER.
2. ELECTRICAL CONTRACTOR SHALL PURCHASE AND INSTALL IDENTIFICATION TAGS ON ELECTRICAL PANELS AS SHOWN.

LIGHT FIXTURE SCHEDULE

FIXT. LTR.	MANUFACTURER	CATALOG NUMBER	LAMPS NO.	LAMPS TYPE	FIXT. VOLT.	FINISH	MOUNTING	WATT	REMARKS
SA	LUMEC	400MH-DMS50-SGX-277-LR-SGL-WFLG-LM-1A/ SSM8V-20-BRTX 1	1	400W MH ED28 1	480	TEXTURED BRONZE	20' POLE	500 1	LUMEC 20' POLE

LIGHTING FIXTURE SCHEDULE NOTES

1. VERIFY ALL LIGHTING FIXTURE LOCATIONS, FINISHES, AND VOLTAGE WITH ENGINEER PRIOR TO INSTALLING.
2. DEVELOPER WILL PROVIDE LIGHT FIXTURES, POLES AND ANCHOR BOLTS. CONTRACTOR TO TRANSPORT FIXTURES TO SITE FROM WAREHOUSE AT 1719 N. ROCK ROAD. 1
3. ALL HID FIXTURES SHALL BE "BURNED-IN" AS PER LAMP MANUFACTURER'S RECOMMENDATIONS TO INSURE PROPER LAMP LIFE.
4. SUBMIT LIST OF LAMPS FOR ENGINEER'S APPROVAL WITH TYPE OF LAMP AND MANUFACTURER TO BE USED FOR EACH FIXTURE LISTED PRIOR TO ORDERING. LAMP TO BE MATCHED WITH FIXTURE.

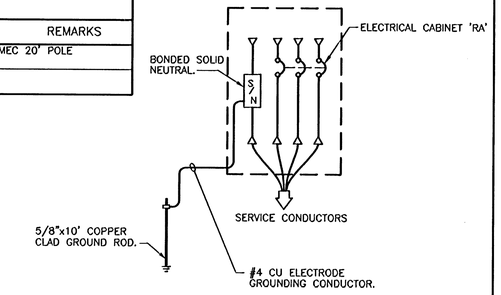

5 SYSTEM GROUNDING DETAIL
NONE

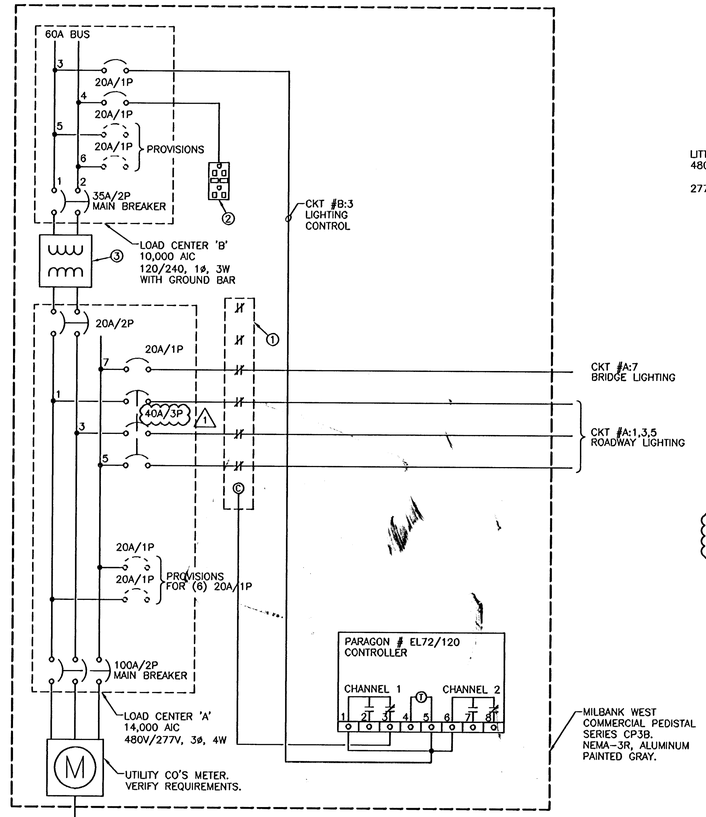

SEQUENCE OF OPERATIONS:
CHANNEL 1: ROADWAY LIGHTING: ENERGIZE AT DUSK DE-ENERGIZE AT DAWN.
CHANNEL 2: SPARE

KEYED NOTES:

① 6P/20A/N.C./480V LIGHTING CONTACTOR WITH 120V COIL.

② GFCI RECEPTACLE MOUNTED IN MILBANK CABINET.

③ 6KVA TRANSFORMER. PRIMARY-480V, 1ø, 3W. SECONDARY-120/240, 1ø, 3W

NOTE: NEUTRALS & EQUIPMENT GROUNDS NOT SHOWN FOR CLARITY.

4 WIRING DIAGRAM FOR ELECTRICAL CABINET 'A'
NTS

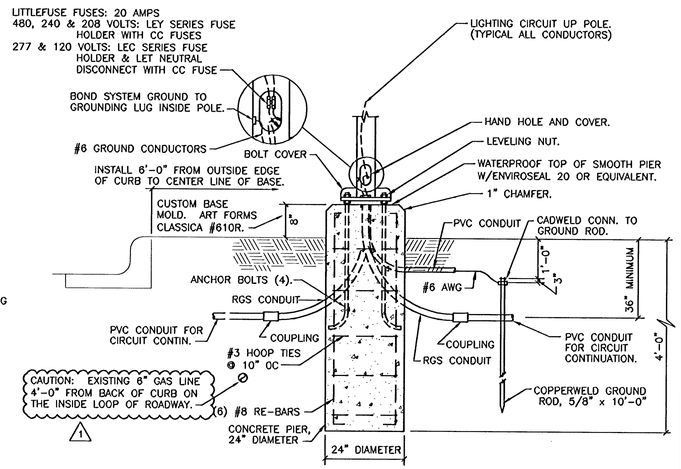

NOTE: INSTALL ALL POLE BASES 6'-0" FROM BACK OF CURB.

NOTE: LEVELING NUTS SHALL BE USED. POLE BEARING PLATE SHALL NOT BE SHIMMED AGAINST PIER CONCRETE.

6 POLE BASE DETAIL
NTS DETAIL APPLIES TO FIXTURES 'SA'

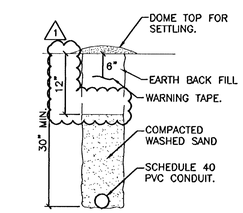

2 CONDUIT TRENCH CROSS SECTION
NTS

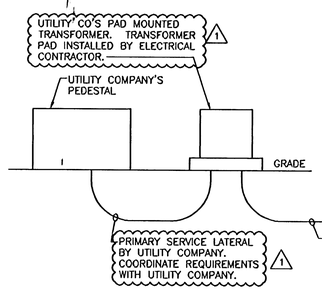

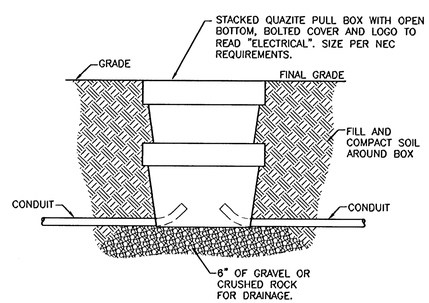

3 IN GROUND PULL BOX INSTALLATION DETAIL
NTS

SITE ELECTRICAL NOTES:

1. CONTRACTOR IS RESPONSIBLE FOR COORDINATING ALL UTILITY SERVICES. FAILURE TO DO SO WILL NOT RESULT IN ANY EXTRA FINANCIAL COMPENSATION FROM THE OWNER. CONTRACTOR SHALL HAVE ALL UTILITY SERVICE REQUIREMENTS IN THE BASE BID.
2. ROUTING OF PRIMARY ELECTRIC SHOWN ON THIS PLAN HAS NOT BEEN COORDINATED WITH RESPECTIVE UTILITIES. CONTRACTOR SHALL COORDINATE EXACT ROUTING & TERMINATION REQUIREMENTS WITH EACH UTILITY.
3. MIN. CONDUCTOR SIZE #10. MIN CONDUIT SIZE 1"

MKEC ENGINEERING CONSULTANTS
411 N. WEBB ROAD
WICHITA, KS. 67206
316 - 684 - 9600

THE WATERFRONT ROADWAY LIGHTING
PROJECT NAME

DETAILS
SHEET TITLE

JAF	JAF	DLP
DESIGN BY:	DRAWN BY:	CHECKED BY:
AUGUST 2003	02014	5/5
DATE	JOB NO.	SHEET/OF

S8-03-01-02