FHWA REG NO.	STATE	PROJECT NO.	YEAR	SHEET NO.	SHEETS
7	KANSAS	468-84092	2006	24	47

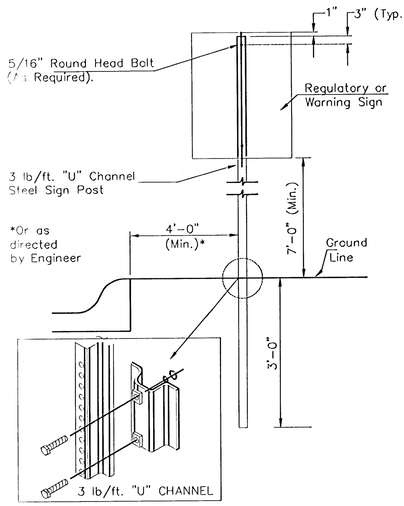

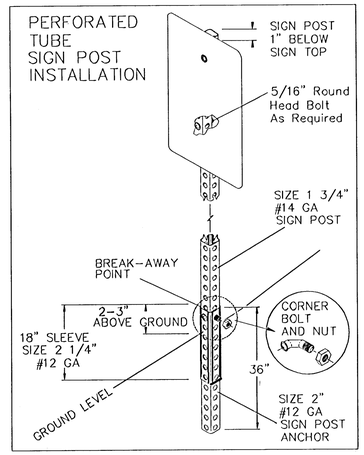

TYPICAL TRAFFIC CONTROL SIGN MOUNTING INSTALLATION

CURB AND GUTTER SECTION

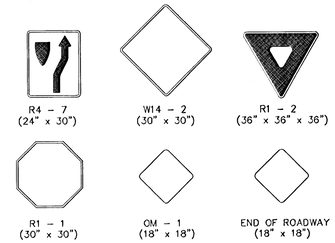

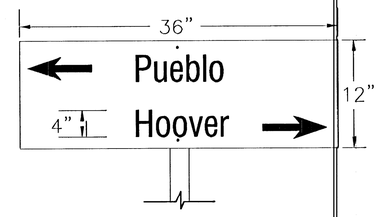

FLAT PLATE STREET NAME SIGN

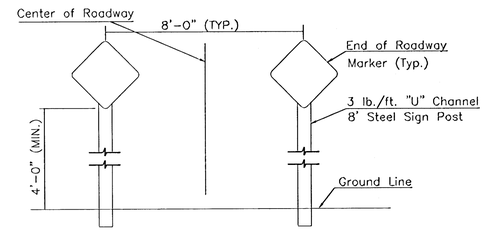

TYPICAL END OF ROADWAY SIGN MOUNTING INSTALLATION

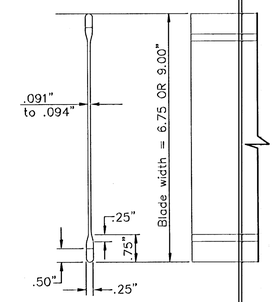

STREET NAME SIGN BLADE DETAILS

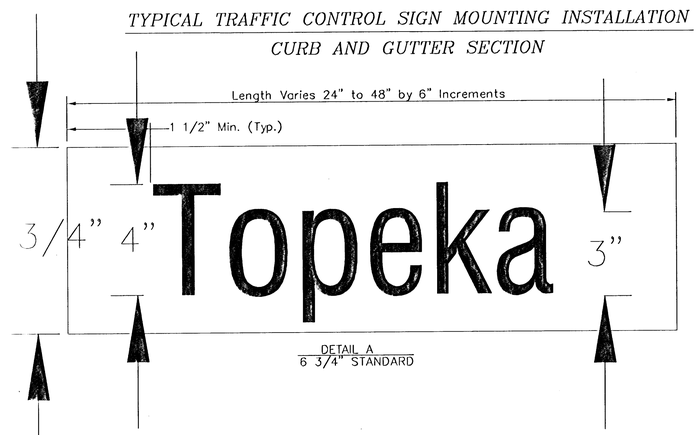

DETAIL A
6 3/4" STANDARD

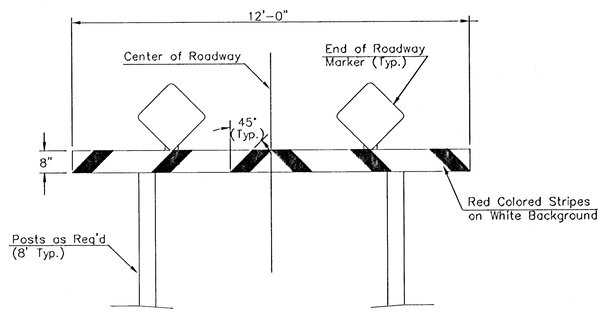

TYPE I BARRICADE DETAIL W/ E.O.R. MARKERS

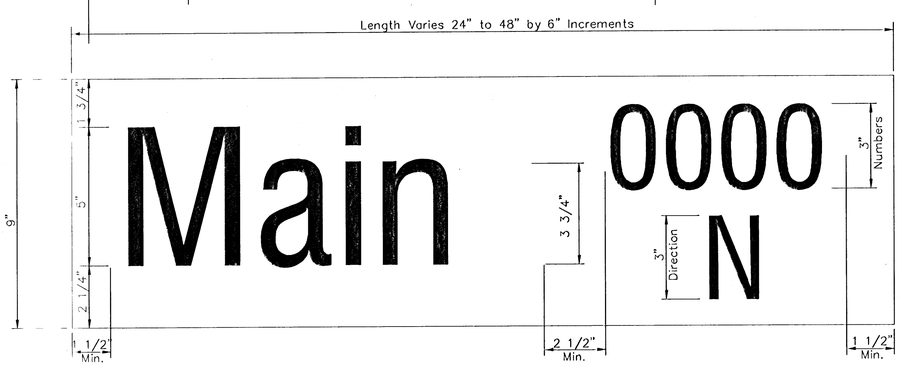

DETAIL B
9" METRO

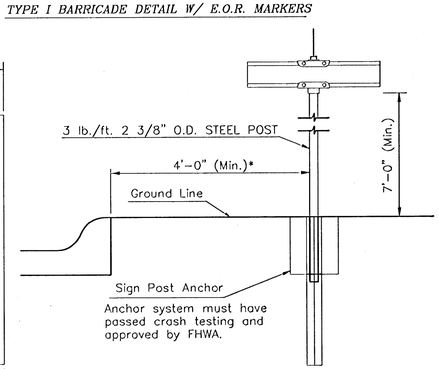

TYPICAL STREET NAME SIGN MOUNTING INSTALLATION

CURB AND GUTTER SECTION

SIGN ASSEMBLY TABLE

LOCATION	SIGN		QUANTITY*
SE of Intersection of Decker and Nineiron	W14-2		1
SE of Intersection of City View and Taft	W14-2		1
End of Future Private Drive, City View	Type I W/ E.O.R.	Markers	1
End of Temporary Cul-de-sac, Valley Hi	End of Road	Signs	2