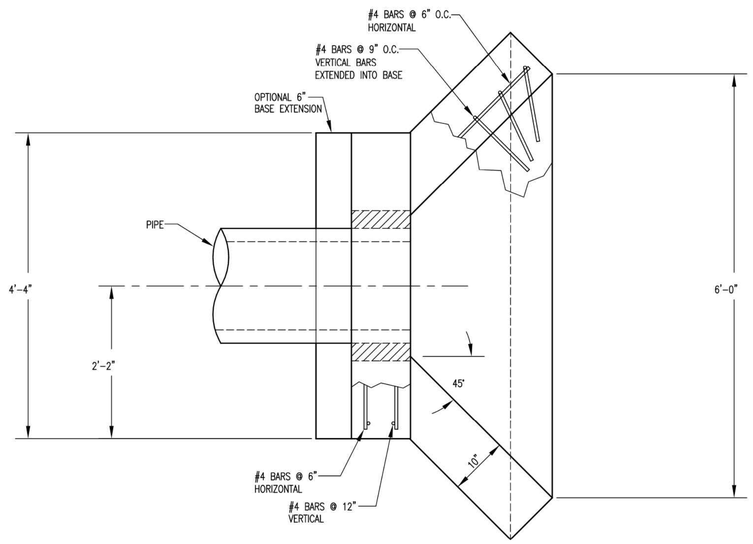

PLAN VIEW

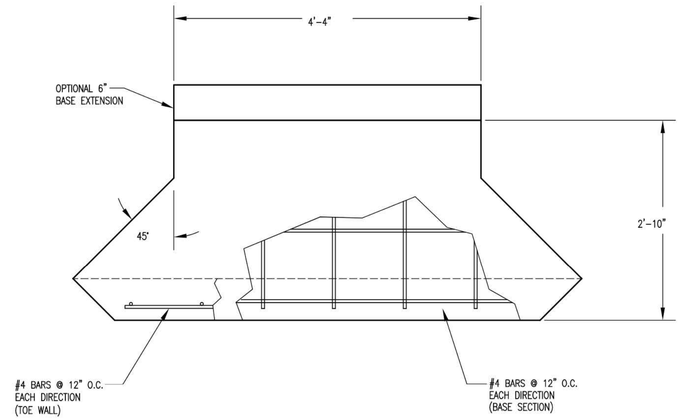

PLAN VIEW
BASE

PIPE Ø	A	B	BLOCKOUT Ø
15"	1'-5 1/2"	7 1/2"	2'-1 1/2"
18"	1'-7"	9"	2'-5"
24'	1'-10"	1'-0"	3'-0"

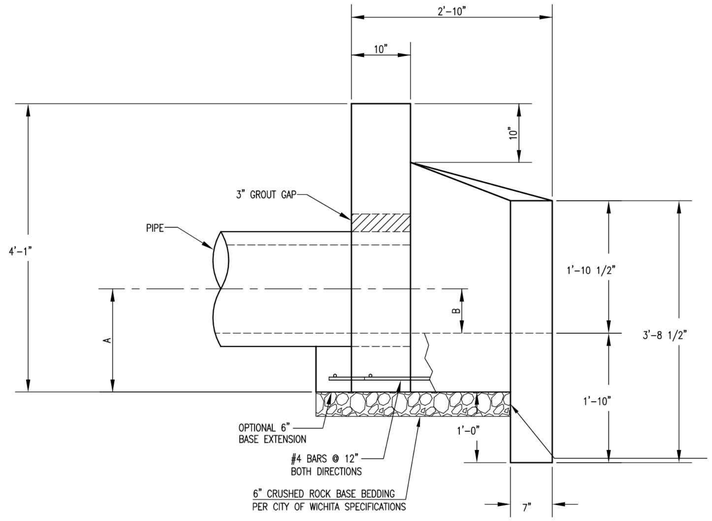

ELEVATION

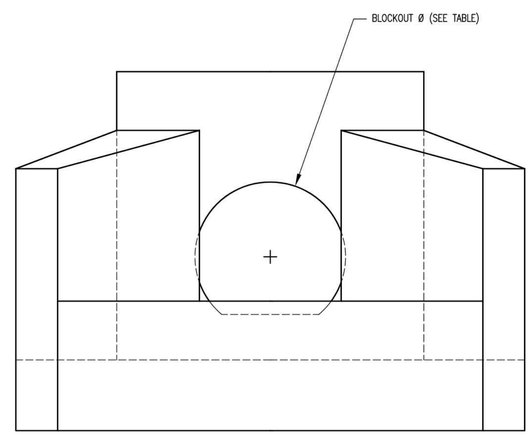

FRONT VIEW

HEADWALLS, AS SHOWN, WILL NOT SUPPORT FLAP GATE.

CITY OF WICHITA
PUBLIC WORKS & UTILITIES
ENGINEERING DIVISION

HEADWALL
DETAILS FOR
15", 18", AND 24" PIPE

CITY ENGINEER
GARY JANZEN, P.E.

PROJECT NUMBER	OCA NUMBER	DATE
		11/2010

CITY ENGINEER'S OFFICE
CITY HALL - SEVENTH FLOOR
455 NORTH MAIN STREET
WICHITA, KANSAS 67202-1620
(316) 268-4501

SHEET

SW-402

PEC
PROFESSIONAL ENGINEERING CONSULTANTS
303 SOUTH TOPEKA
WICHITA, KS 67202
316-262-2691 www.pec1.com

CITY OF WICHITA

RYAN WILLIAM GILES
LICENSED
23090
02/26/2022
KANSAS
PROFESSIONAL ENGINEER

SANITARY SEWER IMPROVEMENTS
LIFT STATION NO. 23
AT
W. 37TH STREET N AND PORTER AVE.

GARY JANZEN, P.E. - CITY ENGINEER
CITY OF WICHITA PROJECT NO. 468-2020-019218 S0015

Issue:

JOB NO.	35-217043-008-0042
DATE	NOVEMBER 2021
PM	RWG
DESIGNED BY	RWG
DRAWN BY	KTD
CHECKED BY	TBK

HEADWALL DETAILS 15-18-24 INCH

CU505

SAVED 12/10/2021 10:26:28 AM BY KURTIS.DEKAT
PLOTTED 2/25/2022 1:39:00 PM BY KURTIS DEKAT
U:\WICHITA-CIVIL\2021\217043\008\MUNI\DRAWINGS\217043-008-CU505-HEADWALL DETAILS 15,18,24 INCH.DWG