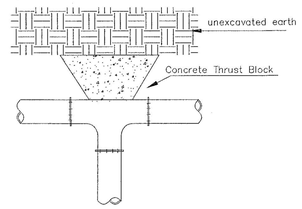

TEE

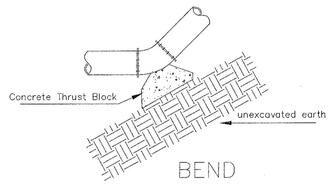

BEND

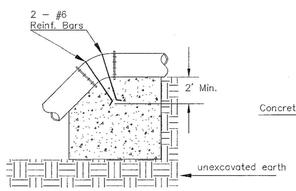

VERTICAL BEND

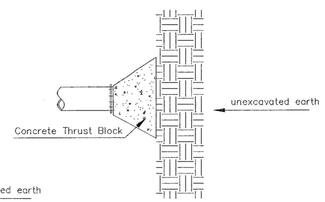

PLUG

PIPE SIZE	THRUST AT FITTINGS IN TONS–AT 150#/IN^{2}P					
	PLUG	90°	45°	22 1/2°	11 1/4°	TEE
6"	2.8	3.95	2.15	1.09	.55	2.8
8"	4.9	6.95	3.75	1.90	.96	4.9
12"	11.4	16.1	8.75	4.45	2.25	11.4
16"	20.15	28.5	15.4	7.85	3.95	20.15
20"	31.15	44.0	23.85	12.15	6.10	31.15
24"	44.55	63.0	34.1	17.4	8.75	44.55

TYPICAL THRUST BLOCKS

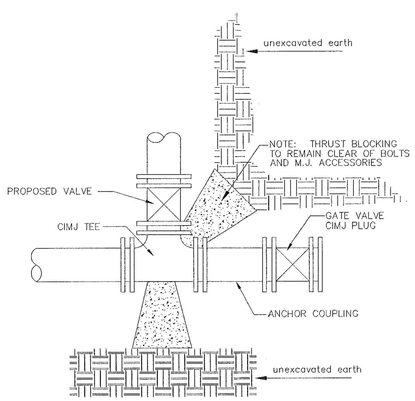

KEY BLOCK DETAIL

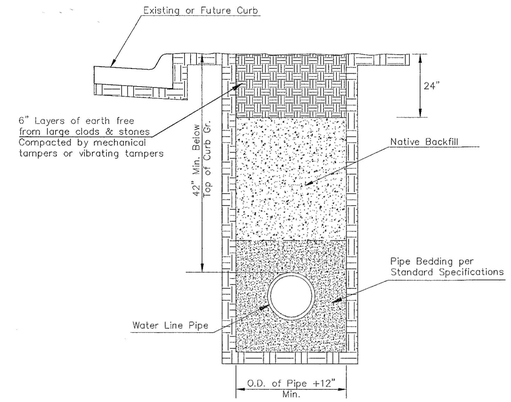

TRENCH COMPACTION IN ROAD RIGHT–OF–WAY

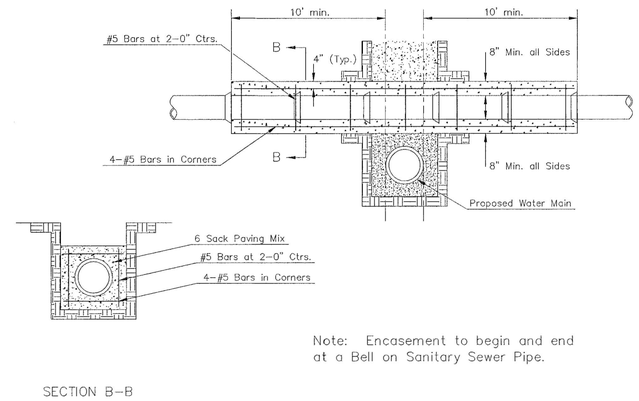

Note: Encasement to begin and end at a Bell on Sanitary Sewer Pipe.

SECTION B–B

REINFORCED CONCRETE ENCASEMENT OF SANITARY SEWER

SIDE VIEW

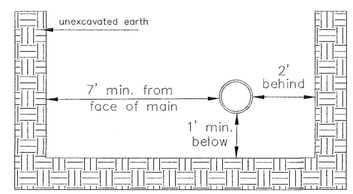

Note: When shoring is required it is to be per The City of Wichita Standard Specifications.

TOP VIEW

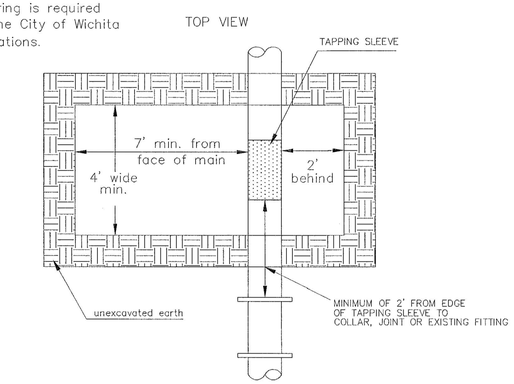

EXCAVATION FOR WET TAP

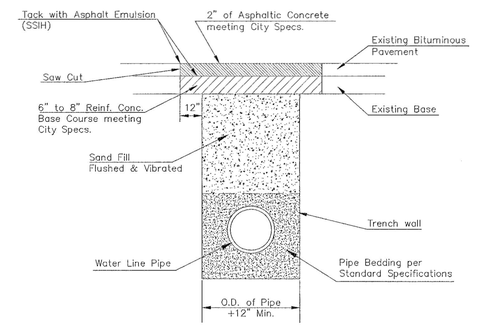

PAVEMENT REPLACEMENT & TRENCH COMPACTION UNDER EXISTING AND PROPOSED CITY ROADS

* PLANS GOVERN UNLESS OTHERWISE NOTED ON PLANS

GARY L. JANZEN LICENSED 16294 KANSAS PROFESSIONAL ENGINEER 07/21/15

REVISED: JULY 2015

CITY OF WICHITA
PUBLIC WORKS & UTILITIES ENGINEERING DIVISION

MISCELLANEOUS WATER DETAILS

CITY ENGINEER
GARY JANZEN, P.E..

PROJECT NUMBER	OCA NUMBER	DATE

CITY ENGINEER'S OFFICE
CITY HALL - SEVENTH FLOOR
455 NORTH MAIN STREET
WICHITA, KANSAS 67202-1620
(316) 268-4501

SHEET

WL-104

PEC
PROFESSIONAL ENGINEERING CONSULTANTS
400 S. KANSAS AVE. SUITE 200
TOPEKA, KS 66603
785-233-8300 www.pec1.com

CITY OF WICHITA

SANITARY SEWER IMPROVEMENTS
COWSKIN FORCE MAIN
AND LIFT STATION 60
IMPROVEMENTS

PAUL GUNZELMAN, P.E. - INTERIM CITY ENGINEER
CITY OF WICHITA PROJECT NO. 468-2022-040654

Issue:

JOB NO.	35-210602-001-042
DATE	DECEMBER 2023
PM	TBK
DESIGNED BY	KJW
DRAWN BY	CSL
CHECKED BY	RWG

MISCELLANEOUS WATER DETAILS

CU503

SAVED 9/1/2022 4:58:14 PM BY CATHY LINK
PLOTTED 12/14/2023 9:39:09 AM BY CATHY LINK
U:\WICHITA-CIVIL\2021\210602\001\MUNI\DRAWINGS\AIR VALVE REPLACEMENTS\210602-001-CU503.DWG