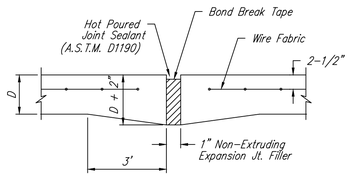

EXPANSION JOINT

NOTE: Extra Thickness to be Subsidiary to Price of Square Yards Pavement

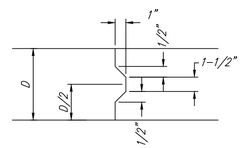

KEYWAY DETAIL

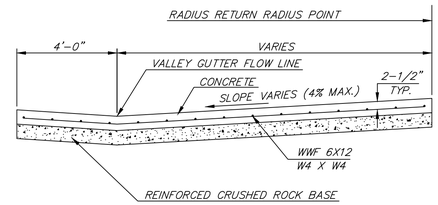

SECTION A-A

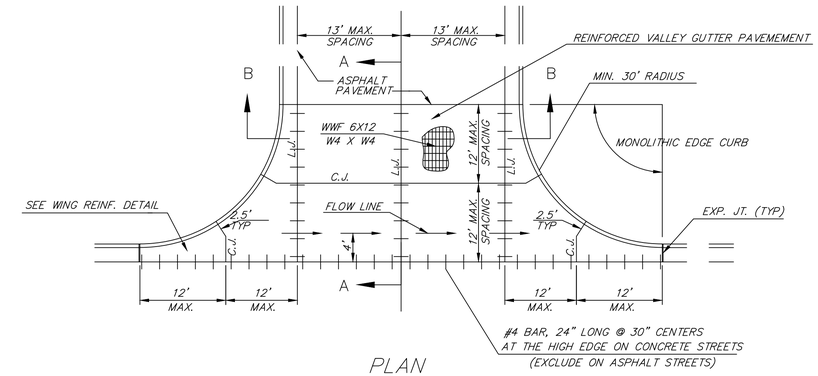

PLAN

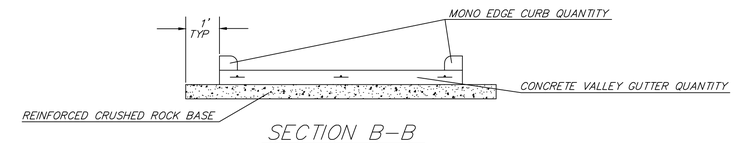

SECTION B-B

REINFORCED VALLEY GUTTER DETAIL

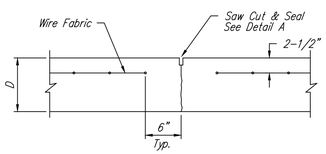

CONTRACTION JOINT DETAIL (C.J.)

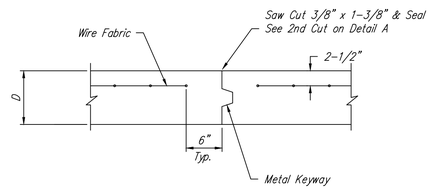

OPTIONAL CONTRACTION JOINT

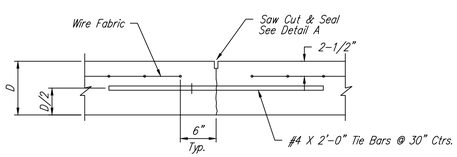

LONGITUDINAL JOINT DETAIL (L.J.)

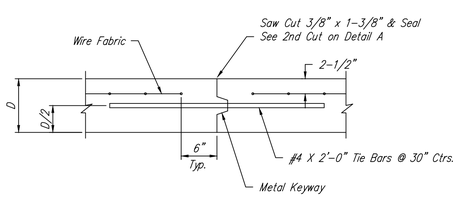

OPTIONAL LONGITUDINAL JOINT DETAIL (L.J.)

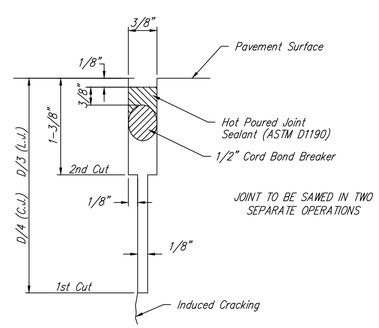

SAW JOINT DETAIL

(DETAIL A)

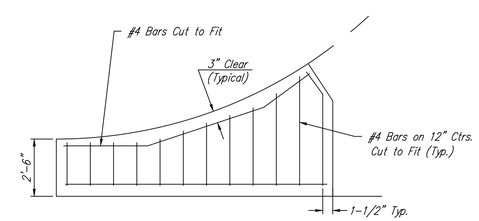

WING REINFORCING DETAIL

REVISION MAY 2017	SECTION B-B, ROCK EXTENDED ONE FOOT BEYOND PAVEMENT

CITY OF WICHITA

PUBLIC WORKS & UTILITIES ENGINEERING DIVISION

VALLEY GUTTER DETAILS

CITY ENGINEER

GARY JANZEN, P.E.

PROJECT NUMBER	OCA NUMBER	DATE

CITY ENGINEER'S OFFICE
CITY HALL - SEVENTH FLOOR
455 NORTH MAIN STREET
WICHITA, KANSAS 67202-1620
(316) 268-4501

SHEET 6.3

PV-109