STATE	PROJECT NO.	YEAR	SHEET NO.	TOTAL SHEETS
KANSAS		0	0	

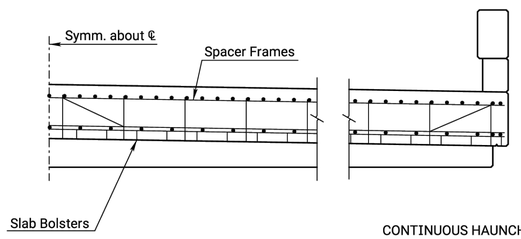

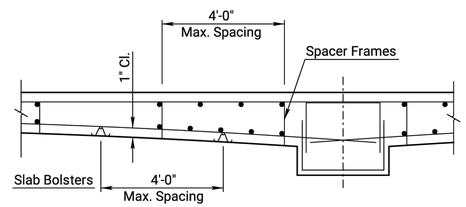

CONTINUOUS HAUNCHED SLAB

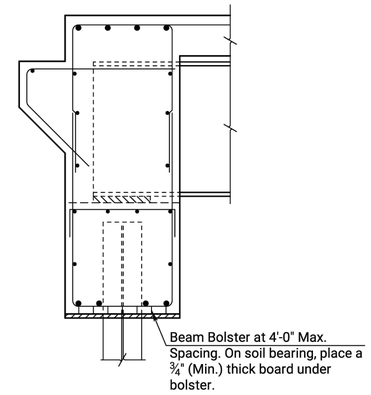

ABUTMENT

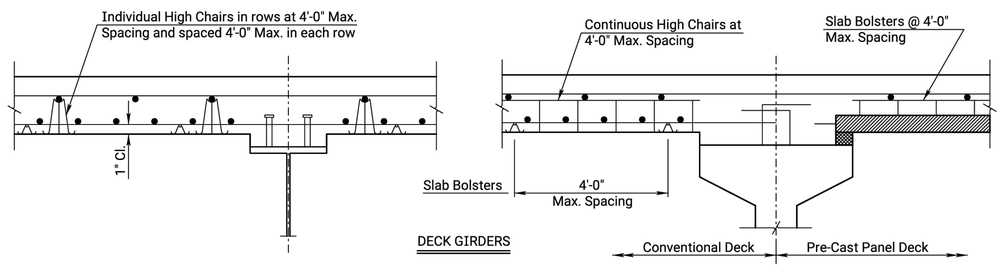

DECK GIRDERS

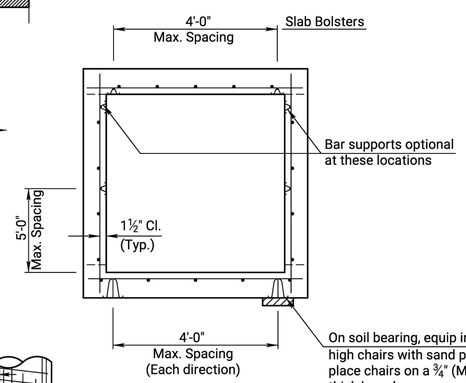

BOX CULVERT

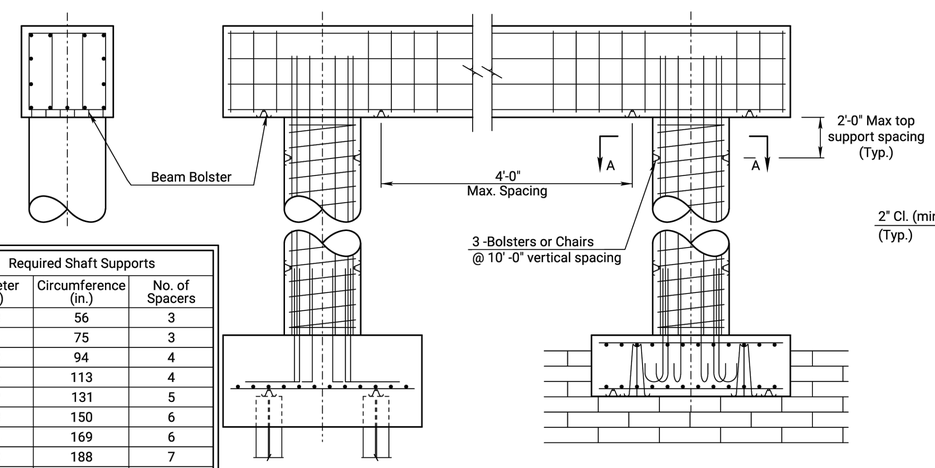

PIER

Required Shaft Supports		
Diameter (in.)	Circumference (in.)	No. of Spacers
18	56	3
24	75	3
30	94	4
36	113	4
42	131	5
48	150	6
54	169	6
60	188	7
66	207	7
72	226	8
78	244	9
84	263	9
90	282	10
96	301	11
102	320	11
108	339	12

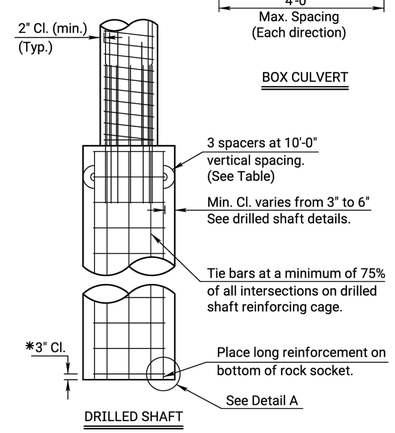

DRILLED SHAFT

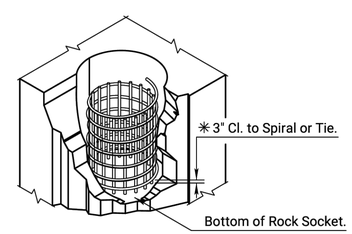

DETAIL A

✳Note: Longitudinal reinforcing steel is placed on the bottom of the rock socket. Maintain 3" clearance from the bottom of rock socket to the first spiral or tie bar.

GENERAL NOTES

Reference is made to the latest edition of the CRSI "Manual of Standard Practice" for recommended industry practices concerning reinforcing steel.

Use only the following types of bar supports:

1) Wire Bar Supports:

a) Epoxy coated reinforcing: Class 1 Protection
b) Non-epoxy coated reinforcing: Class 1, 2, or 3 Protection

2) Plastic Bar Supports

3) Supplementary bars

When securing epoxy coated reinforcement, use tie wires or metal clips that are epoxy or plastic coated.

Do not weld reinforcing steel to bar supports or to other reinforcing steel. Shop weld spacer frames for haunched slabs.

Tie bars at all intersections around the perimeter of each mat and at not less than 2'-0" centers or at every intersection, whichever is greater.

Where more than one length of bar support is required, lap the end legs so they are locked or tied together.

Use proper height supports to maintain the distance between the reinforcing and the formed surface or the top surface of deck slabs within ¼" of that indicated on the plans.

Spacings shown are maximums. Use sufficient supports, as determined by the Engineer, to retain the reinforcing steel in position.

Construct any platforms, required for the support of workers and/or equipment during concrete placement, directly on the forms and not on the reinforcing steel.

Designs and arrangements of Supports or Spacers other than as shown on this sheet, may be used with the permission of the Engineer.

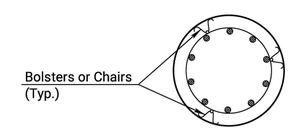

SECTION A-A

NO.	DATE	REVISIONS	BY	APP'D
05	11-10-10	Column Bar Supports Required	J.P.J.	T.L.F.
04	12-01-05	Drilled Shaft Spiral Steel Placement	J.P.J.	K.F.H.
03	08-21-00	Added Pre-Cast Panel Detail	R.A.M.	K.F.H.

KANSAS DEPARTMENT OF TRANSPORTATION

SUPPORTS AND SPACERS FOR REINFORCING STEEL

BR120

FHWA APPROVAL		11-17-10	APP'D	Terry L. Fleck	
DESIGNED	R.A.M.	DETAILED	R.A.A.	QUANTITIES	TRACED R.A.A.
DESIGN CK.	L.R.R.	DETAIL CK.	R.A.M.	QUAN.CK.	TRACE CK. R.A.M.

KDOT Graphics Certified 06-20-2022 Sh. No. 0

KDOT Graphics Certified

Plotted by : KDOT#CADD.Support_ks.gov 25-JUN-2022 00:07
File : br120.dgn

SAVED 10/10/2024 3:20:15 PM BY LUKE.PETER
PLOTTED 10/10/2024 3:20:39 PM BY LUKE PETER
U:\WICHITA-CIVIL\2021\210254\001\PEC\DRAWINGS\210254-001-CB103.DWG

PEC
PROFESSIONAL ENGINEERING CONSULTANTS
303 SOUTH TOPEKA
WICHITA, KS 67202
316-262-2691 www.pec1.com

CITY OF WICHITA

LUKE PETER LICENSED 27413 10/11/2024 KANSAS PROFESSIONAL ENGINEER

WEST STREET IMPROVEMENTS
FROM MACARTHUR ROAD TO
47TH ST. SOUTH

CITY OF WICHITA

Issue:	
JOB NO.	210254-001
DATE	OCTOBER 2024
PM	TPA
DESIGNED BY	LGP
DRAWN BY	CP
CHECKED BY	KMS

REINFORCING DETAILS

CB504