EXHIBIT "A"

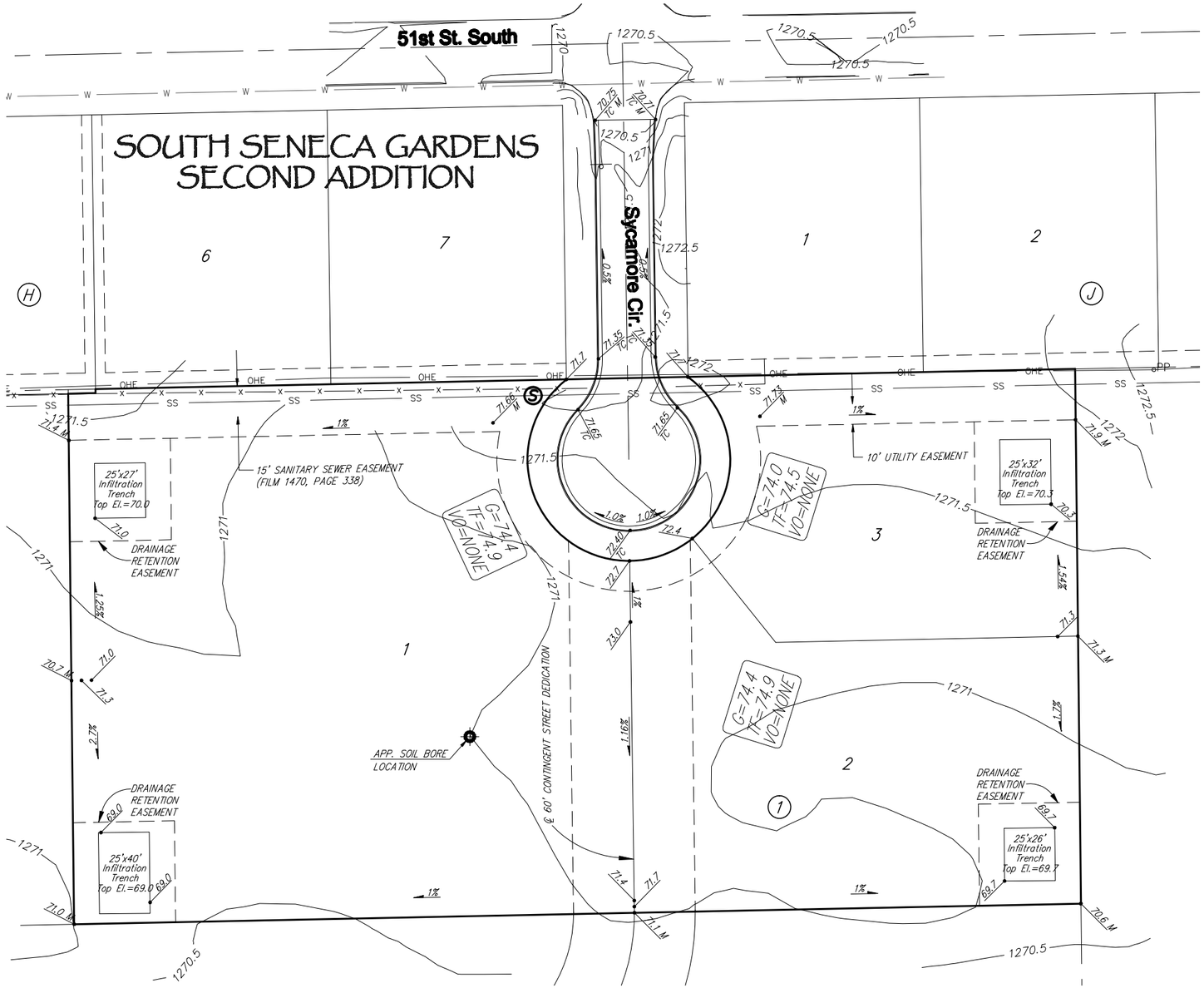

MINIMUM BUILDING PAD ELEVATION FOR LOWEST OPENING INTO STRUCTURES		
BLOCK	LOT NO.	ELEVATION (N.G.V.D.)
1	1	1272.0
1	2	1271.7
1	3	1272.3

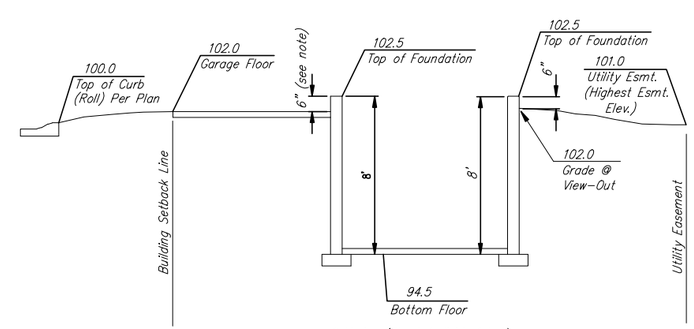

* Varies (Check Individual Lot)

Section Through Typical Full Basement

BENCH MARK: CHISELED "SQUARE ON THE TOP OF CURB AT THE EAST CURB RETURN AT THE NORTH EAST CORNER OF SYCAMORE AND 51ST ST. N.
ELEVATION = 1271.31 (NAVD88)

Note: Soil bore performed on 6-26-09 indicate the water table to be 8.5' below the surface. The ground elevation at the bore location is approximately 1271, therefore the water table is approximately 1262.5.

CORNFIELD ADDITION
4 CORNER LOT GRADING
WICHITA, KANSAS

Ruggles & Bohm, P.A.
Engineering, Surveying, Land Planning
604 North Main
Wichita, Kansas 67203
www.rbkansas.com

Drawn by:	AML	Job No.	3445P
Checked by:	AML	Sheet	1 of 1
Drainage Plan (Grading Plan)	--	Oct. 2, 2009	