BELLECHASE

Subdivision Grading Plan

Wichita, Sedgwick County, Kansas

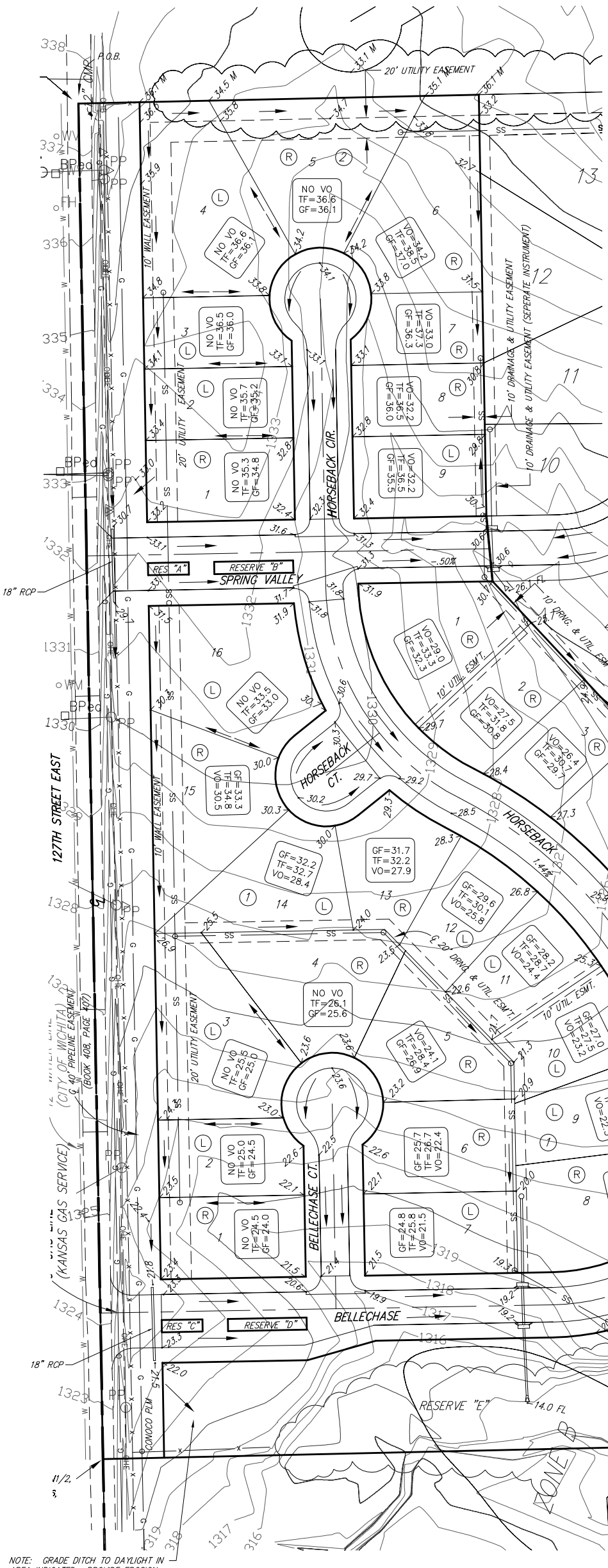

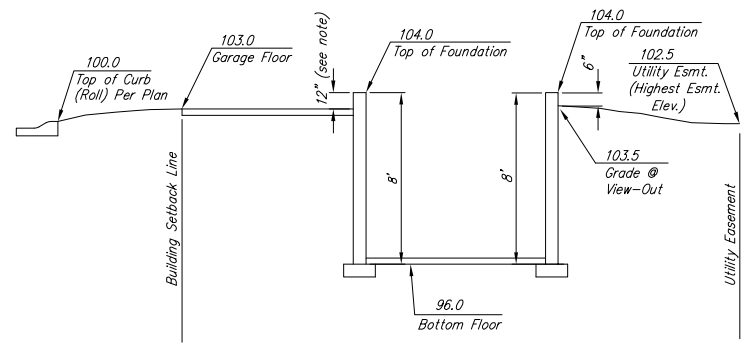

* Varies (Check Individual Lot)

Section Through Typical Full Basement

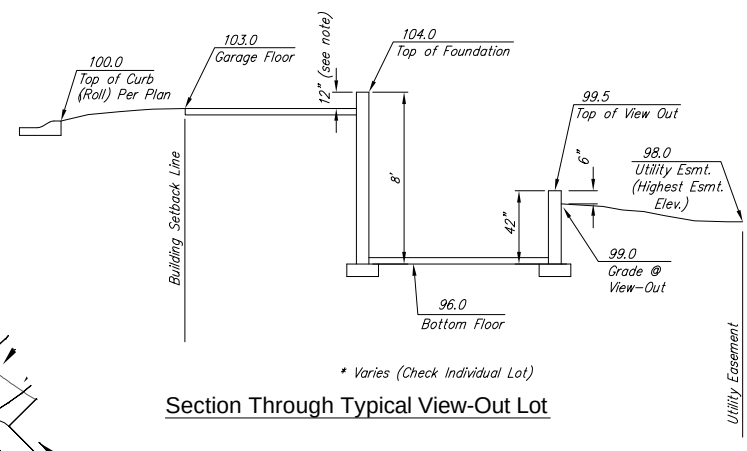

* Varies (Check Individual Lot)

Section Through Typical View-Out Lot

(R) Garage Right Recommended

(L) Garage Left Recommended

(WO) Walk-Out Optional

✳ Extra Steps Required for Viewout

NOTE: RIGHT AND LEFT DESIGNATIONS ARE RECOMMENDATIONS ONLY. BUILDER CAN VARY GARAGE ORIENTATIONS.

NOTE: GRADE DITCH TO DAYLIGHT IN AREA INDICATED. PROVIDE EROSION CONTROL MAT OR RIP-RAP AS NECESSARY TO PREVENT EROSION.

REVISED July 30, 2007

BENCH MARK:
RAILROAD SPIKE IN SOUTH FACE OF POWER POLE 79' SOUTH SOUTHEAST OF THE WEST QUARTER CORNER OF SEC. 26, T27S, R2E
ELEV.=1337.46 (NGVD)

LEGEND

XX.X	Proposed Corner Grade
G=69.5	Proposed Garage Floor
TF=70.0	Proposed Top of Foundation
VO=65.7	Proposed Viewout Elevation

BELLECHASE
GRADING PLAN
WICHITA, KANSAS

Ruggles & Bohm, P.A.
Engineering, Surveying, Land Planning
924 North Main
Wichita, Kansas 67203
www.rbkansas.com
(316) 264-8008
(316) 264-4621 fax
E-mail: info@rbkansas.com

DESIGN	KWL
DRAWN	MLP
REVIEW	
UTILITY	
DATE	July 30, 2007
R.B. JOB	2953E
SHEET	1 OF 1
DRAWING FILE	Grading Plan {Grading Plan}
PROJECT NUMBER	.