SHEET NO.	TOTAL SHEETS
E1.1	

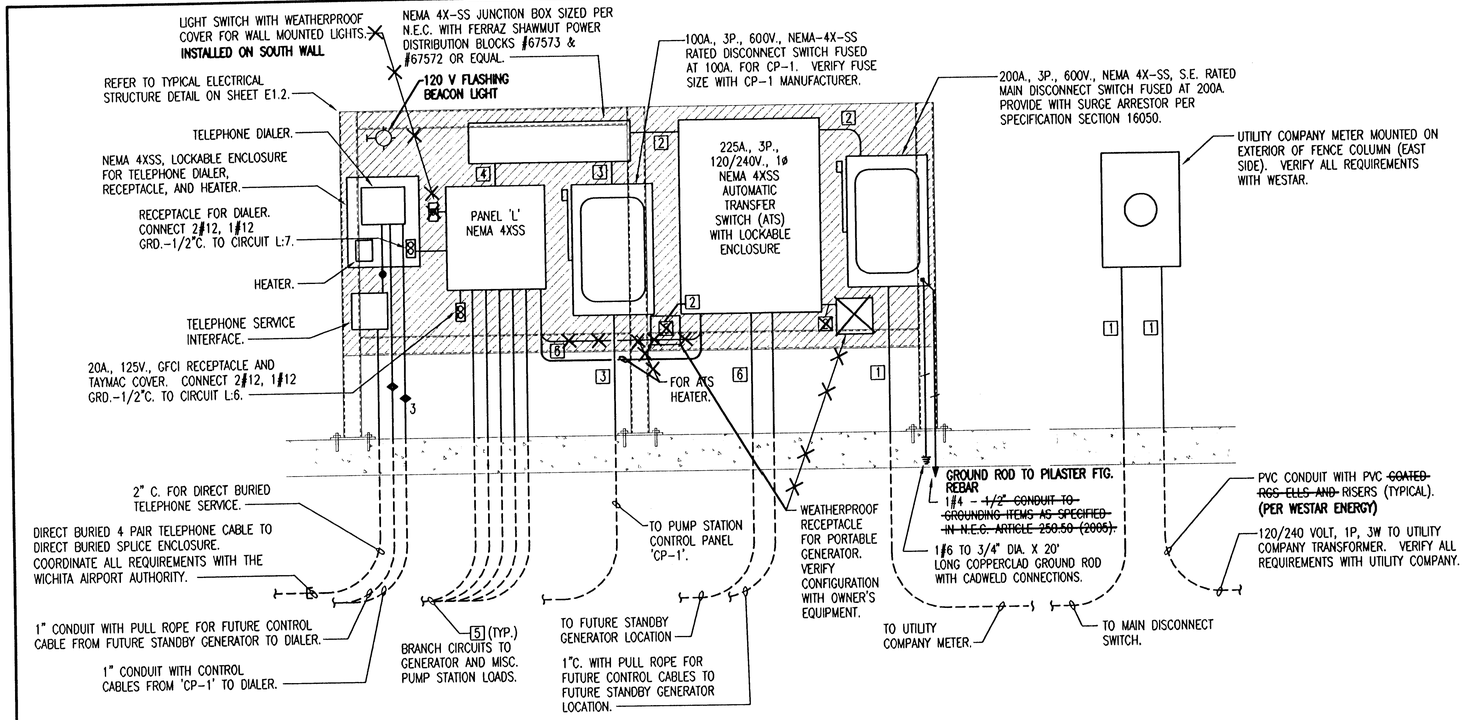

1 ELECTRICAL RISER DIAGRAM
NO SCALE

GENERAL NOTES

1. ALL ELECTRICAL WORK SHALL COMPLY WITH THE LATEST EDITION OF THE NATIONAL ELECTRICAL CODE (NEC) & THE AMERICANS WITH DISABILITIES ACT (ADA).
2. REFER TO RELATED ARCHITECTURAL, MECHANICAL, AND STRUCTURAL DRAWINGS FOR RELATED INFORMATION.
3. REFER TO THE SPECIFICATIONS FOR DATA NOT ON THE DRAWINGS.
4. E.C. SHALL REFER TO MECHANICAL DRAWINGS AND SPECIFICATIONS FOR THE REQUIREMENTS ASSOCIATED WITH WIRING AND CONNECTION OF INTERLOCKING AND CONTROLS OF MECHANICAL UNITS AND THERMOSTAT LOCATIONS.
5. COORDINATE OUTLET BOX LOCATIONS WITH MASONRY TO MINIMIZE CUTTING OF BRICK OR BLOCK.
6. ALL MOUNTING HEIGHTS TO CENTERLINE OF ITEM UNLESS OTHERWISE NOTED. VERIFY ALL OUTLET LOCATIONS ON THE JOB PRIOR TO ROUGH-IN.
7. CONDUIT RUN W/CONDUCTORS AS INDICATED & GROUND WIRE SIZED PER N.E.C. 250-122 (1999). CONDUIT SIZE AS REQUIRED.
8. WHEN INCREASED CONDUCTOR SIZES ARE SHOWN ON THE PLANS, THE LARGER CONDUCTOR SIZE SHALL BE USED THROUGHOUT THE LENGTH OF THE CIRCUIT, INCLUDING NEUTRAL AND GROUND.
9. ALL EXPOSED AND UNDERGROUND CONDUITS SHALL BE PVC COATED RGS, UNLESS OTHERWISE NOTED.
10. INSTALL NAMEPLATES ON EXTERIOR OF PANEL 'L' AND LIFT STATION ENCLOSURE INDICATING MONTH AND YEAR PLACED IN SERVICE.
11. THE PORTION OF THE WORK PROVIDED BY WESTAR SHALL BE PAID FOR BY THE OWNER. THE CONTRACTOR IS RESPONSIBLE FOR ALL SCHEDULING AND COORDINATION WITH WESTAR.

SYMBOL LIST

SYMBOL	DESCRIPTION	MOUNTING
WP	WEATHERPROOF	
UON	UNLESS OTHERWISE NOTED	
	GROUND FAULT DUPLEX RECEPTACLE	46"AFF
	SPECIAL DEVICE (AS NOTED)	
J	JUNCTION BOX	
'A'	BRANCH CIRCUIT PANEL & PANEL DESIG.	72" TO TOP
	ELECTRICAL DISTRIBUTION EQUIPMENT	
1	FEEDER DESIGNATION	
	TELEPHONE CABLE	IN CONDUIT
(1) 2	ANALOG CONTROL CABLE - # OF SHIELDED PAIRS	IN CONDUIT
(2) 2	CONTROL CABLE - # OF PAIRS	IN CONDUIT
	CONDUIT SEAL	
	CONDUIT RUN 2#10 & 1#10 GRD.-3/4"C.	CEIL./WALL
	CONDUIT RUN 2#10 & 1#10 GRD.-3/4"C.	EARTH/FLOOR
	CONDUIT RUN 2 CIRCUITS, 3#10 & 1#10 GRD.-3/4"C.	EARTH/FLOOR
	CONDUIT RUN PARTIAL CIRCUIT	
8	SEE GENERAL NOTE 7 & 8	
#6	CONDUIT RUN TWO (2) CIRCUITS PHASE CONDUCTORS (#10 UON) NEUTRAL CONDUCTOR (#10 UON) SWITCH LEGS (#10 UON) GROUND CONDUCTOR (#10 UON)	CEIL./WALL
	MISC. EQUIPMENT CONNECTION	
M	MOTOR	
	DISCONNECT SWITCH	
	STARTER	
	120V. HORN	
	120V. FLASHING BEACON LIGHT	
A	LIGHT FIXTURE & FIXTURE LETTER	WALL

(1) ANALOG CONTROL CABLE BELDEN #8760, 3/4"C. MIN.
(2) #14 AWG CU CONDUCTORS WITH #12 AWG CU GROUND.

FEEDER SCHEDULE

DESIG.	EQUIPMENT SERVED	CONDUCTORS SETS	CONDUCTORS NO.	CONDUCTORS SIZE	GROUND SIZE PER SET	ISOLATED GROUND SIZE	CONDUIT SIZE PER SET
1	METER/MAIN DISCONNECT	1	3	#3/0 AWG CU	--	--	3"
2	ATS/GEN REC/DIST. BLOCKS	1	3	#3/0 AWG CU	#6	--	2"
3	CONTROL PANEL 'CP-1'	1	3	#1 AWG CU	#8	--	1-1/2"
4	PANEL 'L'	1	3	#1 AWG CU	#8	--	1-1/2"
5	MISC.	1	2	#10 AWG CU	#10	--	3/4"
6	FUTURE GENERATOR	1	--	WITH PULL ROPE	--	--	2"

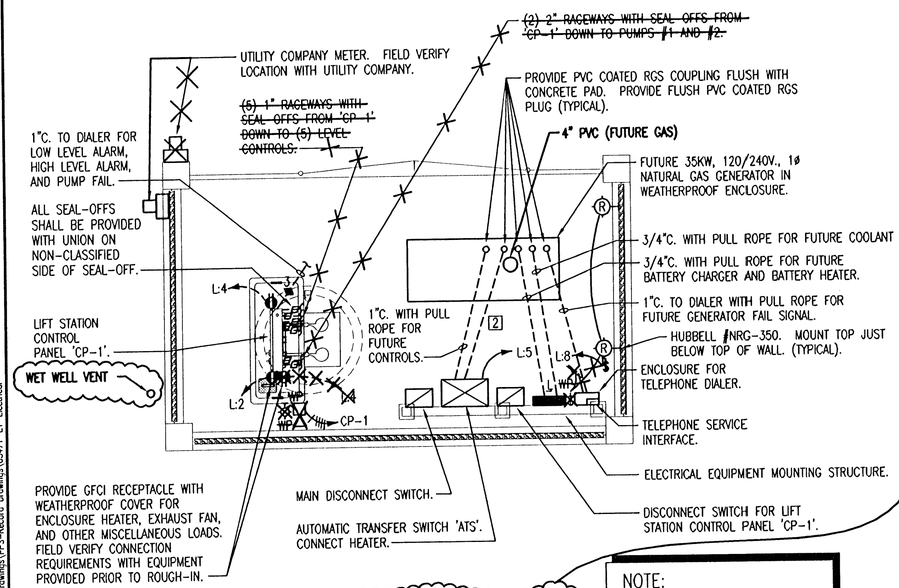

2 ELECTRICAL LIFT STATION PLAN
SCALE: 1/4" = 1'-0"

NOTE:
LOCATE ALL CONDUITS INSTALLED FOR FUTURE GENERATOR BASED ON A ONAN GENERATOR.

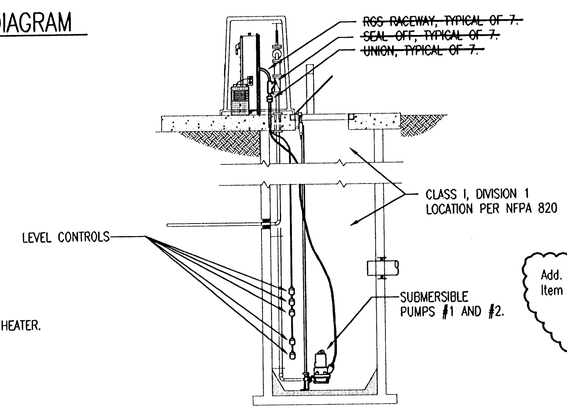

3 ELECTRICAL LIFT STATION SECTION
SCALE: 1/4" = 1'-0"

NOTE:
~~PROVIDE (7) RACEWAYS DOWN THRU TOP OF WET WELL WITH SEAL OFFS FOR CONNECTION OF (5) LEVEL CONTROL INSTRUMENTS AND (2) PUMPS.~~ ALL POWER AND CONTROLS CABLING FOR PUMPS AND LEVEL INSTRUMENTS TO BE PROVIDED BY THE LIFT STATION PROVIDER. INSTALLATION OF CABLING FROM EQUIPMENT SHALL BE BY ELECTRICAL CONTRACTOR. FINAL TERMINATIONS OF EQUIPMENT IN 'CP-1' SHALL BE BY LIFT STATION SUPPLIER. COORDINATE ALL INSTALLATION REQUIREMENTS WITH LIFT STATION EQUIPMENT MANUFACTURER. PROVIDE CONNECTIONS AS REQUIRED FOR EXHAUST FAN AND LOUVER, AND ENCLOSURE HEATER.

26 JAN 07
RECORD DRAWING

△3
Add. #3
Item No. 2

Sheet E1-1-Electrical Symbols, General Notes, Schedules, and Details

Electrical Lift Station Plan, ADD the following note:
"Contractor shall provide 1-1/2" pipe for natural gas service line.
Pipe shall be plastic coated steel pipe. ASTM A 120 or A 53, Schedule 40, seamless Grade B, black steel pipe.
Pipe shall be coated with X-Tru Coat. Service line shall be installed underground from 3' outside of concrete wall. under the wall, and shall terminate 6" above concrete pad near future generator area.
Location shall be coordinated with Owner and Engineer.
Pipe shall be capped on both ends and fittings shall be coated with X-Tru Coat"

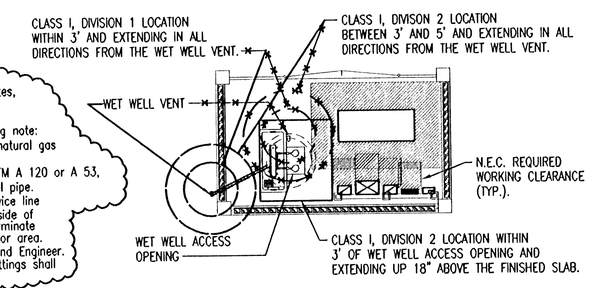

4 ELECTRICAL CLEARANCE & HAZARDOUS LOCATION PLAN
SCALE: 1/8" = 1'-0"

PANELBOARD: L

240/120 VOLTS, 1 PHASE, 3 WIRE
100 AMP MAIN BKR, SURFACE MTD.
22000 AIC LABELED
W/GRD. BUS, NEMA 4XSS

CIRC NO.	LOAD V. A.	LOAD TYPE	LOAD DESCRIPTION	P	AMP SIZE	PHASE	AMP SIZE	P	LOAD DESCRIPTION	LOAD TYPE	LOAD V. A.	CIRC NO.
1	1500	HEAT	FUT GEN COOLANT HEATER	1	20	A	20	1	LIFT STATION HEATER	HEAT	1500	2
3	1500	HEAT	FUT GEN BAT CHARGER & HTR	1	20	B	20	1	LIFT STATION VENT. FAN	MOTR	1176	4
5	1500	POWR	ATS HEATER	1	20	A	20	1	CONV. RECEPT.	RCPT	200	6
7	1200	POWR	DIALER & HEATER	1	20	B	20	1	WALL MOUNTED LIGHTS	LGHT	150	8
9			SPARE	1	20	A	20	1	SPARE			10
11			SPARE	1	20	B	20	1	SPARE			12

△3 ADDENDUM #3

THE WICHITA AIRPORT AUTHORITY
COLONEL JAMES JABARA AIRPORT

ELECTRICAL SYMBOLS, GENERAL NOTES, SCHEDULES, AND DETAILS

SANITARY SEWER AND WATER DISTRIBUTION SYSTEM
SOUTHWEST AREA SITE DEVELOPMENT IMPROVEMENTS

Professional Engineering Consultants, P.A.
303 S. TOPEKA • WICHITA, KANSAS 67202
316-262-2691 • FAX 316-262-3003

Date SEPTEMBER 2005 | Job No. 05471-019

Saved 02-19-2007 3:56:24 PM by TLS
Plot Scale 1:46 05-07-2007 11:27:06 AM by TLS
Q:\2005\05471\Record Drawings\PFS-Record Drawings\05471-E1-Electrical