SANITARY SEWER IMPROVEMENTS
FOR
GREATER SAINT MARY'S BAPTIST CHURCH
LOCATED AT
1648 E. 17TH STREET NORTH
CITY OF WICHITA PRIV. PROJ. NO. 917 PPS(607853)
MIKE LINDEBAK, P.E., CITY ENGINEER
JUNE 1999

GENERAL NOTES

1. ALL ELEVATIONS SHOWN ARE BASED ON CITY OF WICHITA DATUM.

2. CONTRACTOR WILL BE REQUIRED TO PROVIDE A MINIMUM ADVANCE NOTICE OF FORTY-EIGHT(48)HOURS TO UTILITY COMPANIES PRIOR TO STARTING ANY EXCAVATION AS FOLLOWS:

KANSAS ONE CALL 687-2470

THE CONTRACTOR MUST NOTIFY THE FOLLOWING IN CASE OF AN EMERGENCY:

CABLEVISION	262-4270 OR 263-2061
KG&E-GAS	263-7511
KG&E-ELECTRIC	264-1141
PEOPLES NATURAL GAS	942-8611
SOUTHWESTERN BELL TELEPHONE	1-571-2611
CITY OF WICHITA WATER DEPARTMENT	268-4908

THE CONTRACTOR SHALL NOTIFY PIPELINE COMPANIES AT LEAST 24 HOURS IN ADVANCE OF ANY WORK BEING PERFORMED ACROSS AND/OR ADJACENT TO PIPELINES.

3. THE CONTRACTOR SHALL NOT START WORK ON THE PROJECT UNTIL THE PROJECT INSPECTOR IS ASSIGNED TO THE PROJECT AND IS PRESENT ON THE SITE. ANY WORK DONE WITHOUT INSPECTION WILL BE REQUIRED TO BE UNCOVERED FOR INSPECTION.

4. THE CONTRACTOR SHALL GIVE ALL PROPERTY OWNERS AND/OR TENANTS OF DEVELOPED PROPERTY DIRECTLY ABUTTING THE CONSTRUCTION OF THIS PROJECT A MINIMUM OF TEN(10) DAYS ADVANCE NOTICE PRIOR TO START OF CONSTRUCTION.

5. THE CONTRACTOR SHALL BE RESPONSIBLE FOR PRESERVING PROPERTY IRONS. THE CONTRACTOR WILL BE REQUIRED TO RE-ESTABLISH ANY PROPERTY IRONS WHICH ARE DAMAGED OR DESTROYED BY HIS CONSTRUCTION OPERATIONS. SUCH IRONS SHALL BE RE-ESTABLISHED BY A LICENSED LAND SURVEYOR IN ACCORDANCE WITH STATE LAWS.

6. THE CONTRACTOR SHALL RESTORE ALL DITCHES, SWALES, ROAD SHOULDERS, ENTRANCES AND BANK LINES TO THEIR ORIGINAL SLOPES AND GRADES EXCEPT AS SHOWN OTHERWISE.

7. UNDERGROUND UTILITY SERVICE LINES AND OVERHEAD UTILITY POLE LINES ARE TO BE ADJUSTED AS NECESSARY BY OTHERS PRIOR TO CONSTRUCTION UNLESS THE PLANS SPECIFICALLY CALL FOR THEIR ADJUSTMENT BY THE CONTRACTOR OR UNLESS THE PLANS SPECIFICALLY IDENTIFY A UTILITY TO BE ADJUSTED BY ITS OWNER DURING CONSTRUCTION. EXISTING UTILITIES AND THEIR LOCATION, AS SHOWN ON THE PLANS, REPRESENT THE BEST INFORMATION OBTAINABLE FOR DESIGN. LOCATION INFORMATION HAS BEEN OBTAINED FROM THE VARIOUS UTILITY COMPANIES AND IS EITHER FROM COMPANY RECORD DRAWINGS OR COMPANY PROVIDED FIELD LOCATIONS. THE CONTRACTOR WILL BE REQUIRED TO WORK AROUND EXISTING UTILITIES WITHIN THE RIGHT-OF-WAY WHICH DO NOT CONFLICT WITH PROPOSED CONSTRUCTION.

8. RUBBLE FROM THE REMOVAL OF MISCELLANEOUS STRUCTURES AND EXCESS EXCAVATION WHICH IS TO BE WASTED SHALL BE DISPOSED OF ON SITES TO BE PROVIDED BY THE CONTRACTOR. THESE SITES SHALL BE APPROVED BY THE ENGINEER AS TO SUITABILITY, APPEARANCE AND SITE LOCATION. LOCATIONS, THAT IN THE OPINION OF THE ENGINEER, WILL LEAVE AN UNSIGHTLY APPEARANCE WILL NOT BE APPROVED.

ALL DISPOSAL SITES MUST BE APPROVED BY THE KANSAS DEPARTMENT OF HEALTH AND ENVIRONMENT. MATERIAL EITHER STOCKPILED OR DISPOSED OF IN A FLOODPLAIN WOULD REQUIRE A KANSAS STATE BOARD OF AGRICULTURE PERMIT. ANY MATERIAL DUMPED IN WATERS OF THE UNITED STATES OR WETLANDS IS SUBJECT TO U.S. CORPS OF ENGINEERS PERMITTING REGULATIONS. ANY MATERIAL BURIED OR STOCKPILED BEYOND APPROVED CONSTRUCTION LIMITS WOULD REQUIRE ADDITIONAL ARCHAEOLOGICAL INVESTIGATIONS UNLESS BURIED IN A PREVIOUSLY APPROVED BORROW LOCATION.

9. PROPERTIES WITHIN THE PROJECT LIMITS MAY HAVE UNDERGROUND SPRINKLER SYSTEMS IN THE PUBLIC RIGHT-OF-WAY WHICH CONFLICT WITH NEW CONSTRUCTION. CONTRACTOR WILL BE REQUIRED TO REMOVE SUCH IMPROVEMENTS SHOULD THEY NOT BE REMOVED BY THEIR OWNER AT THE TIME OF CONSTRUCTION OF THE PROJECT. THE CONTRACTOR WILL BE REQUIRED TO SALVAGE ALL SPRINKLER HEADS AND/OR VALVES AND GIVE SUCH MATERIAL TO THEIR OWNER. PORTIONS OF UNDERGROUND SPRINKLER SYSTEMS NOT IN CONFLICT WITH NEW CONSTRUCTION SHALL BE PROTECTED FROM DAMAGE AND SHALL REMAIN IN PLACE. ALL WORK IN CONNECTION WITH UNDERGROUND SPRINKLER SYSTEMS SHALL BE CONSIDERED AS SUBSIDIARY TO THE CONTRACT PAY ITEMS OF WORK.

10. THE CONTRACTOR MUST EXAMINE THE CONSTRUCTION SITE PRIOR TO BIDDING AND BE SATISFIED AS TO THE WORK SHOWN FOR COMPLETION. AFTER BIDS HAVE BEEN RECEIVED, THE CONTRACTOR SHALL NOT ASSERT THAT THERE WAS A MISUNDERSTANDING OF THE QUANTITIES OF WORK OR OF THE NATURE FOR THE WORK TO BE COMPLETED.

AS-BUILT
Date: 8/19/00
Signed: [illegible]

PROJECT LOCATION

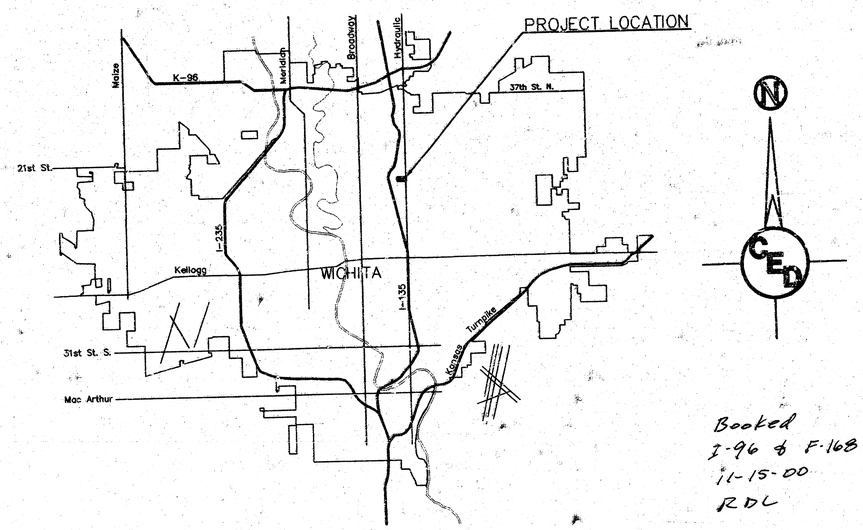

LOCATION MAP

Booked
I-96 & F-168
11-15-00
RDL

PROJECT LOCATED IN THE
N.E.1/4, SEC. 9, T.27S., R.1E.
WICHITA, SEDGWICK COUNTY, KANSAS

INDEX OF SHEETS

1. Title Sheet
2. Plat & General Notes
3. Plan/Profile Sheet
4. Precast Manhole Details
5. Backfill Details

LEGAL

A replat of Lots 8, 10, 12, H. ROBINSON'S ADDITION, Wichita, Kansas, together with the west 1/2 alley lying east to said lots: Lots 14, 16, 18, H. ROBINSON'S ADDITION, Wichita, Kansas, together with all of alley lying east of and adjacent to said Lots, together with an unplatted tract of land in NE 1/4 Sec. 9-27-1E.

BENCHMARK

Brass rod in concrete post, 24' east 25.5' north of intersection of centerlines of 17th Street and Hydraulic Avenue.
Elev. = 117.25

OWNER

Greater St. Mary's Missionary Baptist Church
Attn: Oscar Jones
3901 E. 28th St. N.
Wichita, Kansas 67220
(316) 686-6030

APPROVED AS NOTED
By CITY ENGINEER OF WICHITA

Sanitary Sewers VRH 7/9/99
Storm Sewers
Driveway Approaches
Water Mains
Paving

McCullough Excavation

NOTE TO CONTRACTOR

INSPECTION AND TESTING FOR THIS PROJECT IS TO BE PROVIDED BY A LICENSED CONSULTING ENGINEERING FIRM UNDER CONTRACT WITH THE OWNER/DEVELOPER. SAID INSPECTION TO BE IN ACCORDANCE WITH THE CITY OF WICHITA STANDARD CONSTRUCTION ENGINEERING PRACTICES AND CERTIFIED BY A LICENSED PROFESSIONAL ENGINEER. NO WORK SHALL BE PERFORMED IN DEDICATED EASEMENTS OR THE PUBLIC RIGHT-OF-WAY BY THE CONTRACTOR WITHOUT SUCH INSPECTION, NOR SHALL ANY WORK BE COMMENCED IN DEDICATED EASEMENTS OR PUBLIC RIGHT-OF-WAY WITHOUT WRITTEN AUTHORIZATION BY THE CITY ENGINEER.

MARLAN DALE FORMAN
LICENSED
16391
KANSAS
PROFESSIONAL ENGINEER
7-8-99

COW PRIV. PROJ. NO.: 917 PPS(607853)

CERTIFIED ENGINEERING DESIGN
CED
432 NORTH OHIO
WICHITA, KANSAS 67214
(316) 262-3808

SHEET 1
TOTAL 5

Proj. No. - 990498

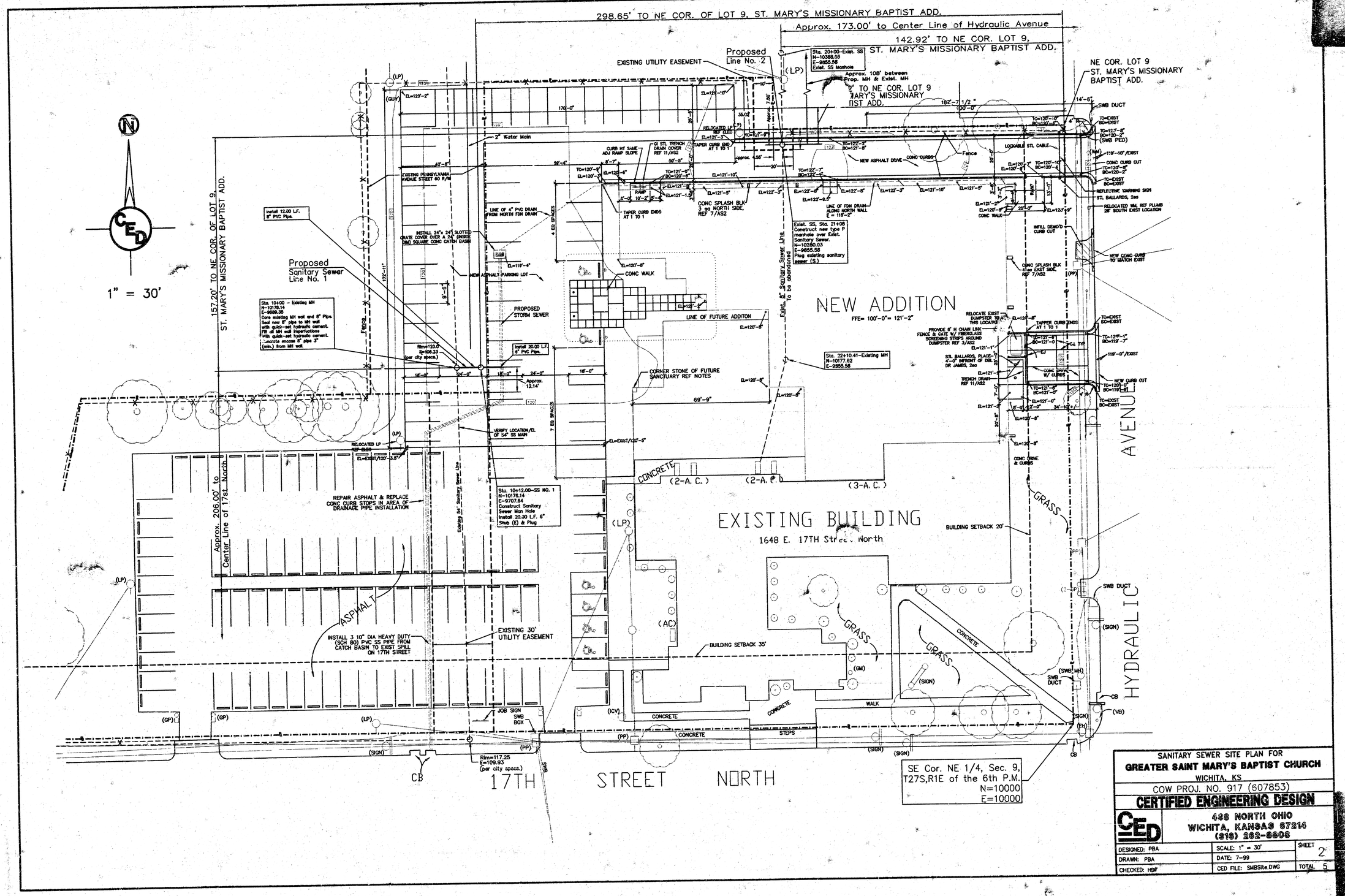

SANITARY SEWER SITE PLAN FOR
GREATER SAINT MARY'S BAPTIST CHURCH
WICHITA, KS
COW PROJ. NO. 917 (607853)

CERTIFIED ENGINEERING DESIGN
428 NORTH OHIO
WICHITA, KANSAS 67214
(316) 262-8608

DESIGNED: PBA	SCALE: 1" = 30'	SHEET 2
DRAWN: PBA	DATE: 7-99	
CHECKED: HDF	CED FILE: SMBSite.DWG	TOTAL 5

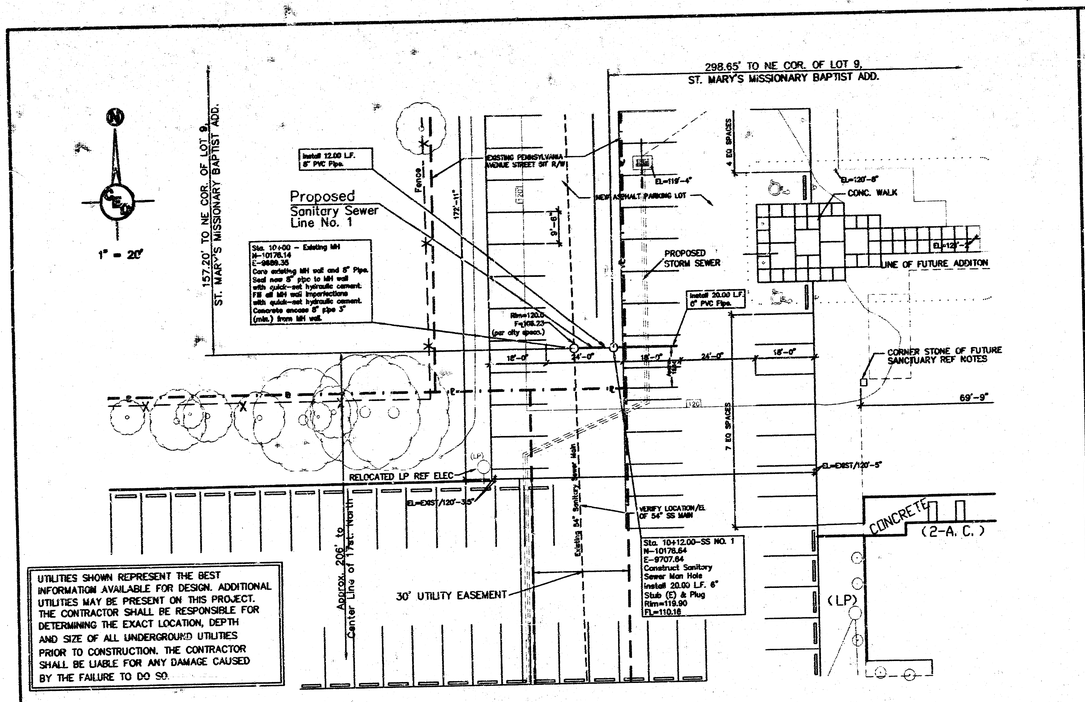

BENCHMARK
Brass rod in concrete post, 24' east 25.5' north of intersection of centerlines of 17th Street and Hydraulic Avenue. Elev. = 117.25

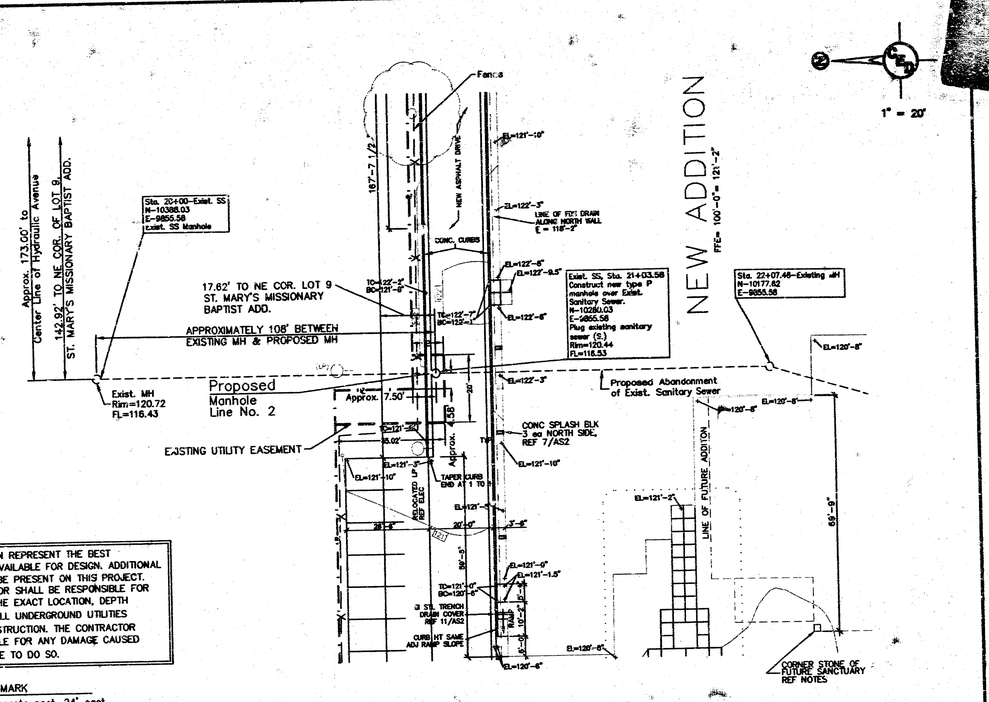

BENCHMARK
Brass rod in concrete post, 24' east 25.5' north of intersection of centerlines of 17th Street and Hydraulic Avenue. Elev. = 117.25

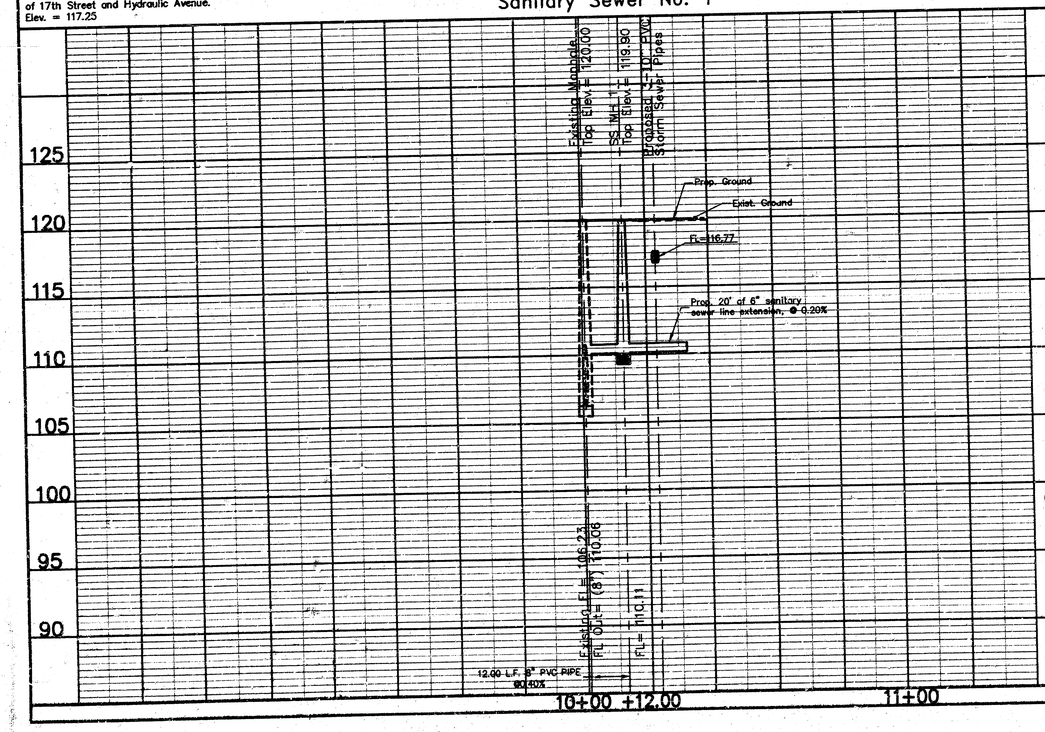

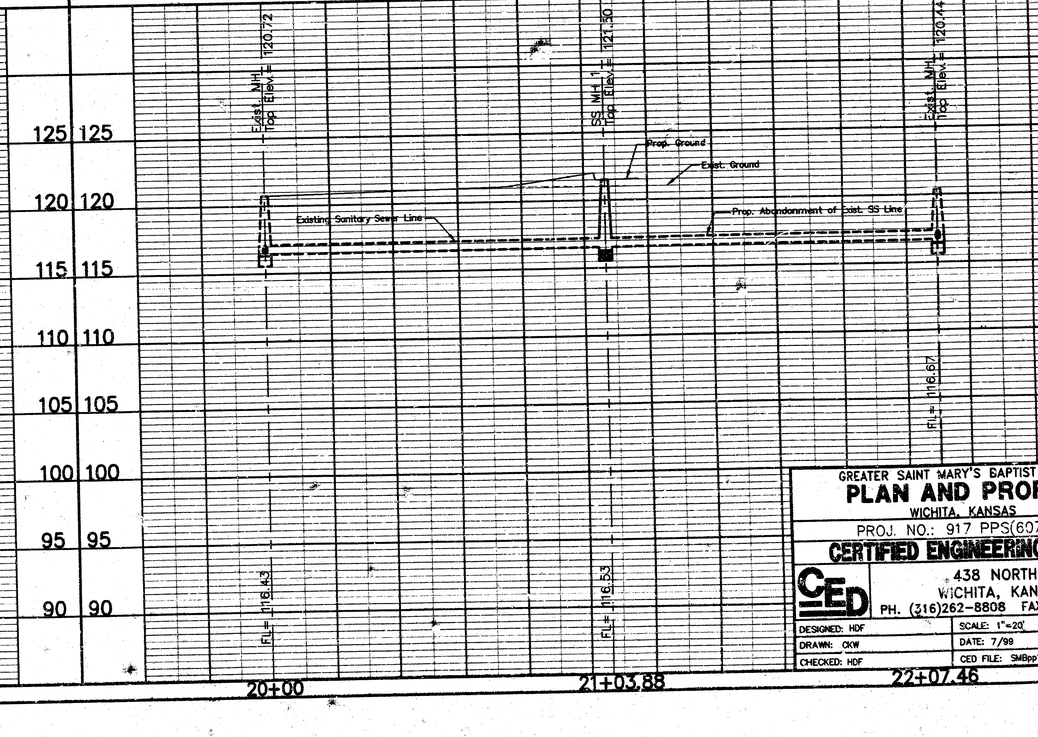

GREATER SAINT MARY'S BAPTIST CHURCH
PLAN AND PROFILE
WICHITA, KANSAS
PROJ. NO.: 917 PPS(607853)

CERTIFIED ENGINEERING DESIGN
438 NORTH OHIO
WICHITA, KANSAS 67214
PH. (316)262-8808 FAX (316)262-0080

DESIGNED: HDF	SCALE: 1"=20'	SHEET 3
DRAWN: CKW	DATE: 7/99	
CHECKED: HDF	CED FILE: SMBpp1	TOTAL 5

SEWER APPURTENANCES DETAILS

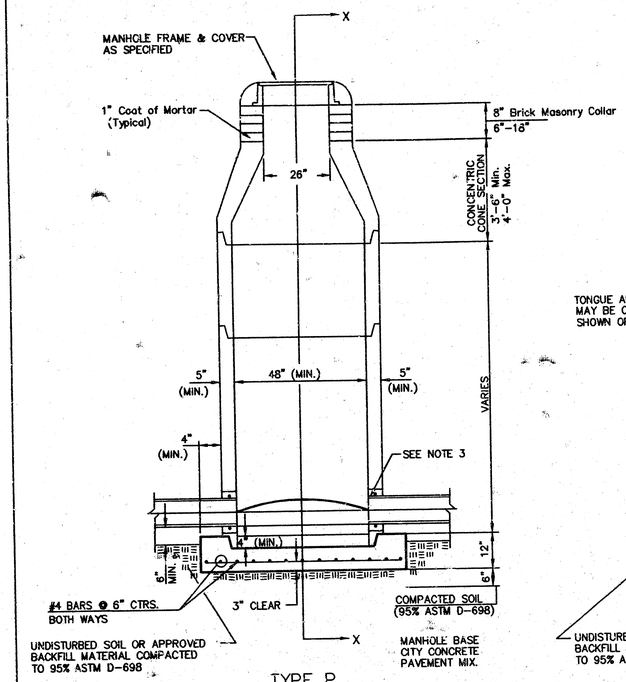

TYPE P
STANDARD MANHOLE

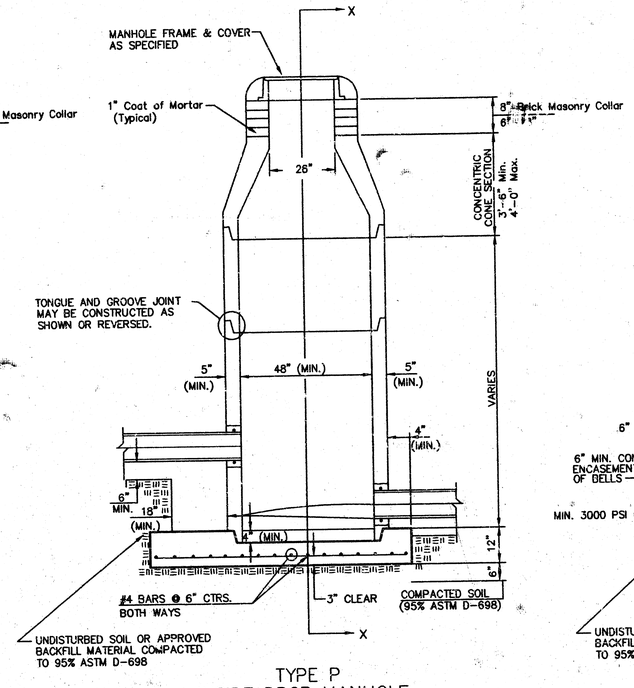

TYPE P
INSIDE DROP MANHOLE

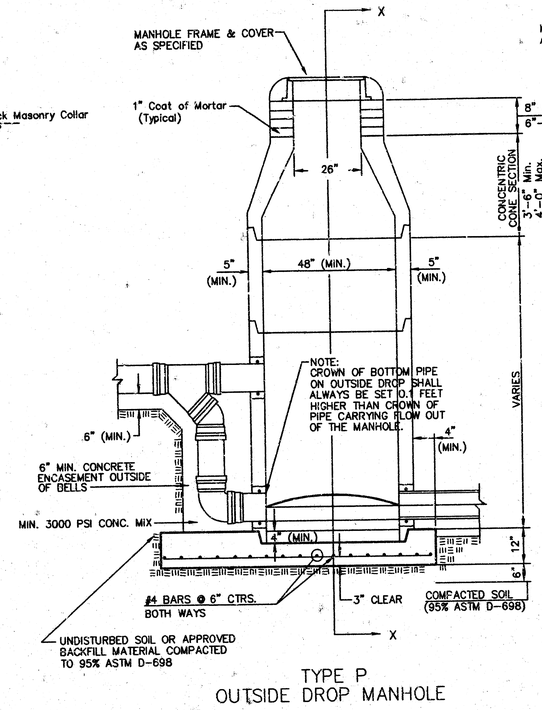

TYPE P
OUTSIDE DROP MANHOLE

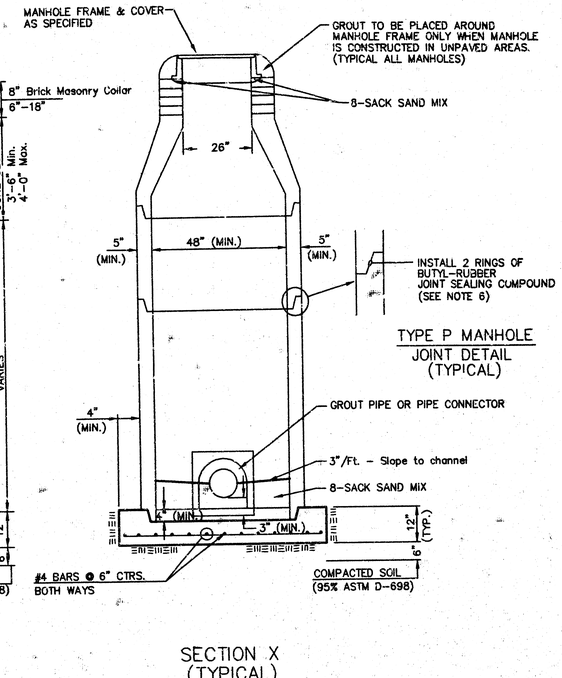

TYPE P MANHOLE
JOINT DETAIL
(TYPICAL)

SECTION X
(TYPICAL)

GENERAL NOTES

PRECAST MANHOLE NOTES

1. ALL PRECAST CONCRETE MANHOLE SECTIONS SHALL CONFORM TO THE LATEST REVISIONS OF A.S.T.M. C478 AS MODIFIED BY THE SPECIFICATIONS.
2. NON-SHRINK GROUT SHALL BE NON-METALLIC TYPE.
3. APPROVED FLEXIBLE WATERSTOP GASKETS SHALL BE INSTALLED TO JOIN THE SEWER TO THE MANHOLE WALL WHEN A.B.S. COMPOSITE PIPE OR P.V.C. PIPE IS USED. FOR OTHER TYPES OF PIPE THE SEWER SHALL BE GROUTED IN PLACE WITH NON-SHRINK GROUT. THE SEWER PIPE SHALL BE SUPPORTED WITH CONCRETE ENCASEMENT A MINIMUM OF 3 FEET FROM THE MANHOLE WALL AND TO THE FIRST JOINT FOR V.C.P. SUCH THAT THE JOINT REMAINS FLEXIBLE.
4. ALL INSIDE SURFACES OF THE CONCRETE MANHOLE WHICH WOULD BE EXPOSED TO SEWER GAS SHALL BE COATED WITH 2 COATS TNEMEC SERIES 66 HI-BUILD EPOXOLINE, DRY THICKNESS OF 8 MILS (MIN.)
5. EXTERIOR MANHOLE WALLS SHALL BE COATED WITH 1 COAT MOBILARMA 633 BITUMINOUS COATING.
6. JOINT SEALING COMPOUND SHALL BE KENT SEAL NO. 2 OR APPROVED EQUAL.
7. PRECAST MANHOLES SHALL BE SET AT LEAST 4 INCHES INTO THE MANHOLE BASE.
8. TOP OF MANHOLE FLOOR SLAB SHALL BE AT LEAST 3 INCHES BELOW THE FLOW LINE OF THE OUTLET PIPE TO INSURE SUFFICIENT MINIMUM THICKNESS OF SHAPED INVERT.
9. LIFTING HOLES SHALL BE FILLED WITH NON-SHRINK GROUT AND THE INTERIOR SURFACE COATED AS SPECIFIED.
10. MORTAR USED IN MASONRY CONSTRUCTION SHALL CONTAIN 8 SACKS OF CEMENT PER CUBIC YARD. CONCRETE USED IN MANHOLE BASES SHALL CONFORM TO THE REQUIREMENTS OF CONCRETE FOR CONCRETE PAVEMENT CONSTRUCTION AS SPECIFIED IN THE CITY STANDARD PAVING SPECIFICATIONS USING CITY CONCRETE PAVEMENT MIX WITHOUT AIR ENTRAINING ADMIXTURE. MORTAR SHALL BE PLACED AROUND THE MANHOLE RING AS SHOWN ON THE DRAWINGS WHEN MANHOLES ARE CONSTRUCTED IN UNPAVED AREAS. MANHOLES CONSTRUCTED WHERE PIPE SIZES ARE SMALLER THAN 24" SHALL HAVE AN INSIDE DIAMETER OF 4'. MANHOLES CONSTRUCTED WHERE PIPE SIZES ARE 24" OR LARGER SHALL HAVE AN INSIDE DIAMETER OF 5'. COMPLETED MANHOLE SHALL BE WITHOUT LEAKS AND WATER TIGHT.
11. REINFORCING STEEL SHALL BE INSTALLED IN THE MANHOLE BASES AND SHALL CONSIST OF NO. 4 BARS PLACED ON 6" CENTERS IN BOTH DIRECTIONS. THE MANHOLE BASE REINFORCEMENT SHALL BE PLACED AT LEAST 3" ABOVE THE BOTTOM OF THE MANHOLE BASE. ALL COSTS FOR FURNISHING AND INSTALLING REINFORCING STEEL SHALL BE INCLUDED IN THE UNIT PRICE BID FOR THE MANHOLE.
12. OPENINGS SHALL BE CUT INTO THE MANHOLE WALL WHEN OUTSIDE DROPS ARE CONSTRUCTED ON EXISTING MANHOLES. SUCH OPENINGS CUT INTO EXISTING MANHOLES SHALL BE AS SMALL AS PRACTICAL TO FACILITATE INSTALLING AND GROUTING THE NEW PIPE IN PLACE. WATERSTOP GASKETS SHALL BE USED WITH P.V.C. AND A.B.S. COMPOSITE PIPE. THE NEW PIPE SHALL BE GROUTED INTO THE OPENING USING AN APPROVED NONSHRINK GROUT FOR THE FULL MANHOLE WALL THICKNESS. THE EXTERIOR OF THE COMPLETED CONNECTION SHALL BE SEALED WITH AN APPROVED BITUMINOUS COATING SUCH THAT THE CONNECTION WILL BE WATER TIGHT. FLOOR OF MANHOLE SHALL BE MODIFIED TO FORM NEW FLOW CHANNEL FOR THE NEW CONNECTION AS INDICATED BY THE DRAWING. THIS WORK, INCLUDING MODIFICATION OF MANHOLE FLOOR, SHALL BE PAID FOR AT THE UNIT PRICE BID FOR OUTSIDE DROP STACK CONSTRUCTED ON EXISTING MANHOLE.
13. THE FLOORS OF ALL MANHOLES SHALL BE SHAPED WITH FLOW CHANNELS SUCH THAT THE MANHOLES WILL BE SELF CLEANING AND FREE OF AREAS WHERE SOLIDS COULD BE DEPOSITED AS SEWAGE FLOWS THROUGH THE MANHOLE FROM ALL INLET PIPES TO THE OUTLET PIPE. FLOW CHANNELS SHALL BE FORMED TO MATCH THE BOTTOM HALVES OF THE INFLOWING PIPES AND THE OUTFLOWING PIPE AS SHOWN BY THE DRAWINGS EXCEPT FOR INSIDE DROP MANHOLES. FLOW CHANNELS FOR INSIDE DROP MANHOLES SHALL BE CONSTRUCTED AS INDICATED BY THE DRAWING. MANHOLE FLOORS SHALL HAVE SLOPES OF 3 INCHES PER FOOT IN THE AREAS OUTSIDE OF THE FLOW CHANNELS SLOPED TOWARD THE FLOW CHANNELS. PIPES LAID THROUGH MANHOLES SHALL HAVE THE TOP HALF REMOVED TO NEAT LINES FOR THE FULL INSIDE DIAMETER OF THE MANHOLE. MANHOLE FLOORS SHALL THEN BE SHAPED AROUND THE BOTTOM HALF OF THE PIPE WHICH FORMS THE FLOW CHANNEL.
14. PIPES INSTALLED WITHIN THE EXCAVATION MADE FOR THE MANHOLE SHALL BE CRADLED WITH CONCRETE TO THE LIMITS OF THE MANHOLE EXCAVATION. WHEN CLAY PIPE IS USED, THE CRADLE SHALL EXTEND TO THE FIRST JOINT OUTSIDE THE MAHOLE. THE CRADLE SHALL BE TERMINATED AT THE CLAY PIPE JOINT IN A MANNER WHICH WILL MAINTAIN THE FLEXIBILITY OF THE JOINT. COST OF CRADLE WITHIN MANHOLE EXCAVATION OR TO CLAY PIPE JOINTS ADJACENT TO MANHOLE SHALL BE INCLUDED IN THE UNIT PRICE BID FOR THE MANHOLE.
15. MANHOLE COVER CASTINGS AND MANHOLE FRAME CASTINGS SHALL CONFORM TO THE REQUIREMENTS AS INDICATED IN THE STANDARD SPECIFICATIONS AND AS SHOWN IN THE STANDARD DETAIL DRAWING.
16. THE VERTICAL DROP IN INSIDE DROP MANHOLES SHALL NOT EXCEED 2' FOR INFLOWING PIPES SIZED 12" OR SMALLER AND 2' FOR INFLOWING PIPES LARGER THAN 12". THE CROWNS OF INFLOWING PIPES SHALL NEVER BE SET LOWER THAN THE CROWN OF THE OUTFLOWING PIPE.
17. STANDARD MANHOLES AND STANDARD INSIDE DROP MANHOLES SHALL BE BID AS STANDARD MANHOLES FOR THE TYPE AND DIAMETER INDICATED. OUTSIDE DROP MANHOLES SHALL BE BID AS STANDARD OUTSIDE DROP MANHOLES FOR THE TYPE AND DIAMETER INDICATED. ALL MANHOLE DIAMETERS WILL BE 4' UNLESS INDICATED OTHERWISE.
18. A BRICK MASONRY COLLAR SHALL BE INSTALLED BETWEEN THE CAST IRON FRAME AND THE CONCENTRIC CONE. THE COLLAR WILL HAVE 8" WALLS AND A VERTICAL HEIGHT OF 6" MINIMUM AND 18" MAXIMUM. A 1" COAT OF MORTAR WILL BE PLASTERED ON THE OUTSIDE OF THE COLLAR. THE USE OF PRE-CAST CONCRETE SPACERS FOR MANHOLE TOP ADJUSTMENT IS ALSO ALLOWED.

THE CITY OF WICHITA
CITY ENGINEER'S OFFICE
CITY HALL - SEVENTH FLOOR
455 NORTH MAIN STREET
WICHITA, KANSAS 67202
(316) 268-4501
(316) 268-4114 FAX

STANDARD
TYPE 'P'
MANHOLES

M. E. LINDEBAK P.E. - CITY ENGINEER

PROJECT NUMBER	INDEX CODE
917 PPS	607853
DATE: JUNE 99	SHEET 4 OF 5

Sheet No.	To Sh
5	5

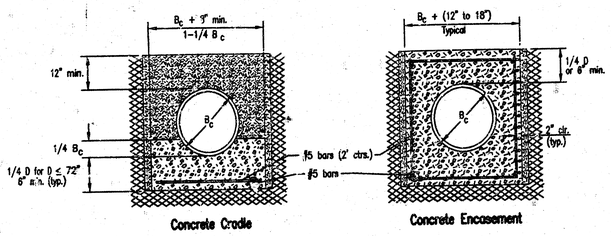

CLASS A

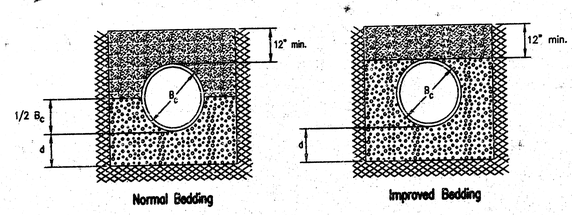

CLASS B

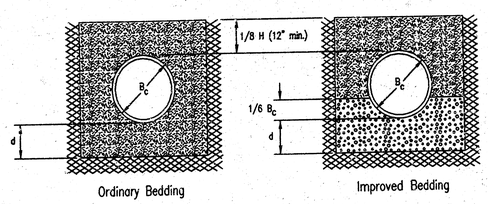

CLASS C

PIPE ZONE BACKFILLING

B_c = Outside Pipe Diameter

H = Backfill from Top of Pipe to Existing Ground

D = Inside Pipe Diameter

d = Depth of Bedding Material Below Pipe

= Granular Bedding Material or Sand-Gravel Bedding

= Compacted Embedment

= Concrete

Depth of Bedding Material Below Pipe		
D	d(min) Soil	d(min) Rock
27" & smaller	4"	6"
30" to 60"	5"	9"
66" & larger	6"	12"

Granular Bedding Material shall be an approved material consisting of durable crushed rock conforming with the requirements of the latest revision of ASTM C-33 Size No. 67 (3/4" to No. 4); to be placed in not more than 6" layers and compacted by slicing with a shovel or vibrating. Soundness, abrasion, and absorption limits shall be as required for coarse aggregates in Section 03010-Concrete Work in the specifications.

Sand-Gravel Bedding Material - sand-gravel mix meeting Type III-1 of the 1990 Kansas Standard Specifications for State Road and Bridge Construction.

Compacted Embedment shall be an approved sand material free from debris, organic material, and stones with 100% passing the 3/4" sieve to be placed in uniform layers not more than 6" thick and compacted to 95 percent maximum density as determined by ASTM D698. Granular Bedding Material may be substituted for all or part of Compacted Embedment Materials.

Class A "Concrete Cradle" and/or Class A "Concrete Encasement" is not required unless specified on the plans. However, where unexpected trench conditions exist or improper trenching is performed Class A Bedding may be required as determined by the Engineer.

Class B Bedding shall be used for all flexible pipe.

a. Class B Normal Bedding shall be used for PVC Pipe unless wet conditions are encountered.

b. Class B Improved Bedding shall be used for other flexible pipe, and for PVC pipe in wet conditions.

Class C Bedding shall be used for all rigid pipe.

a. Class C Ordinary Bedding shall be used for all rigid pipe unless wet conditions are encountered.

b. Class C Improved Bedding shall be used for wet conditions existing in the trench, as directed by the Engineer, at no additional cost to the Owner. The dimensions shall be equal to that required for "rock" excavation (see specifications).

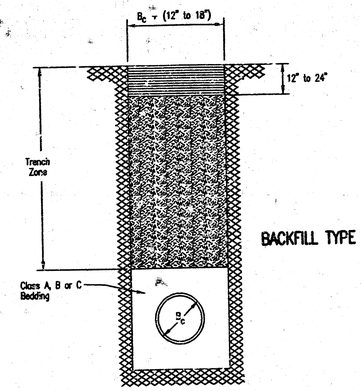

BACKFILL TYPE I

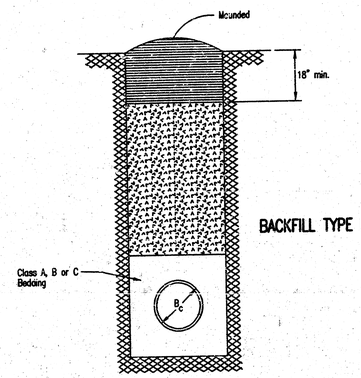

BACKFILL TYPE II

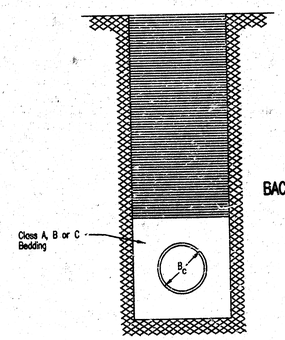

BACKFILL TYPE III

TRENCH ZONE BACKFILLING

B_c = Outside Pipe Diameter

= Compacted Granular Backfill

= Uncompacted Earth Backfill

= Compacted Earth Backfill

Compacted Granular Backfill material shall be an approved sand material free from debris, organic material and stones with 100% passing the 3/4" sieve and not more than 15% passing a No. 200 sieve; to be jetted and mechanically vibrated into place and compacted to 95% density as determined by ASTM D698.

Uncompacted Earth Backfill material may be natural soil free from large clods or stones, brush, roots more than 2 inches in diameter, debris, and junk. Flooding with water shall be provided as directed by the Engineer.

Compacted Earth Backfill shall consist of material existing prior to trenching or selected material as directed by the Engineer, and shall be compacted to 90% density as determined by ASTM D698.

Backfill: Backfill material and compaction requirements shall conform to either Type I, Type II or Type III as specified in the plans. One years maintenance will be required on all backfill.

Backfilling Through Rock: Backfilling through rock shall be performed as specified in the paragraph Backfill above, except that the Pipe Zone is increased to provide eighteen (18) inches of cover over the pipe. When approved by the Engineer the remainder of the backfill may be excavated rock provided the excavated rock has been broken up so that earth and rock will thoroughly mix and not result in voids around the larger pieces of rock. Any excess rock remaining after the trench has been backfilled shall be removed or wasted as directed by the Engineer.

Backfilling Under Pavement: Backfilling under existing or proposed pavement shall be performed as Backfill Type I to a level of two (2) feet from the bottom of the pavement. The remainder of the trench shall be backfilled with selected material, sufficiently damp to be properly compacted in layers not exceeding six (6) inches in depth, compaction shall be performed with mechanical tampers and continued until a relative density of 100 percent of standard density, in conformance with ASTM D698 is attained.

Backfilling Under Gravel Streets: Where the trench crosses or is in existing gravel surfaced streets, the backfill shall be compacted as provided in the paragraph "Backfilling Under Pavement".

BACKFILL DETAILS