AMERICAN Flow Control Submittal Information

4" - 12" SERIES 2500-1 RESILIENT WEDGE GATE VALVE, NRS

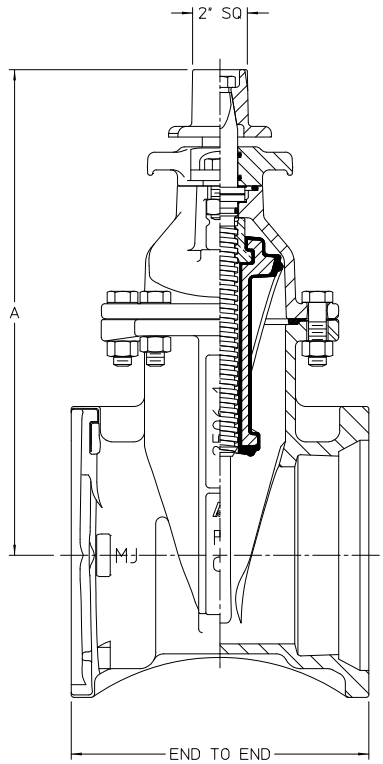

SHOWN WITH 2" OPERATING NUT

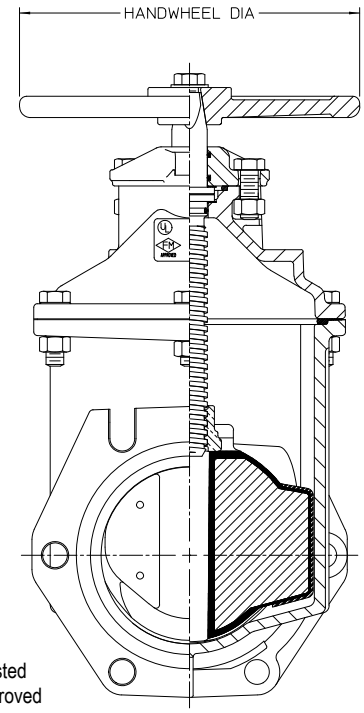

UL Listed
FM Approved
AWWA

SK20041101-1

SHOWN WITH OPTIONAL HANDWHEEL

DIMENSION	VALVE SIZE				
	4"	6"	8"	10"	12"
End to End - MJ/MJ	10.00	10.50	11.50	12.50	13.50
End to End - FL/FL	9.00	10.50	11.50	13.00	14.00
End to End - TY/TY	13.00	15.88	17.50	18.75	19.75
End to End - FL/MJ	9.50	10.50	12.38	13.62	14.38
End to End - FL/TY	11.00	13.19	14.50	15.88	16.88
End to End - PVC/ PVC	13.00	15.88	17.50	-	-
A	13.91	17.12	20.47	24.06	27.59
B	2.50	2.50	2.50	2.50	2.50
C	4.00	5.22	5.50	-	-
D	4.00	5.22	5.50	5.62	5.62
E	9.00	11.19	13.50	15.88	18.00
F DIA	1.00	1.00	1.00	1.31	1.31
Handwheel Diameter	10.00	12.00	14.00	16.00	16.00
No. of Turns to Open	14	20	26	32	38

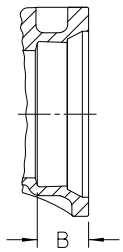

MECHANICAL JOINT (MJ)

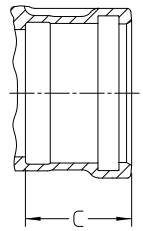

PVC
(NOT AVAILABLE FOR UL/FM)

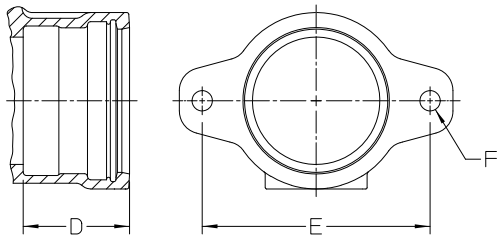

TYTON® (TY)

TYTON® is a registered trademark of United States Pipe and Foundry Co., LLC.

OPTIONAL END CONNECTIONS

AMERICAN FLOW CONTROL

THE RIGHT WAY

AMERICAN Flow Control
P.O. Box 2727
Birmingham, Al. 35202-2727
Phone: 1-800-326-8051
Fax: 1-800-610-3569
E-mail: afcsales@american-usa.com

Waterous Company
125 Hardman Avenue South
South St. Paul, Mn. 55075-1191
Phone: 1-888-266-3686
Fax: 1-800-601-2809
E-mail: afcsales@american-usa.com

WWW.AMERICAN-USA.COM

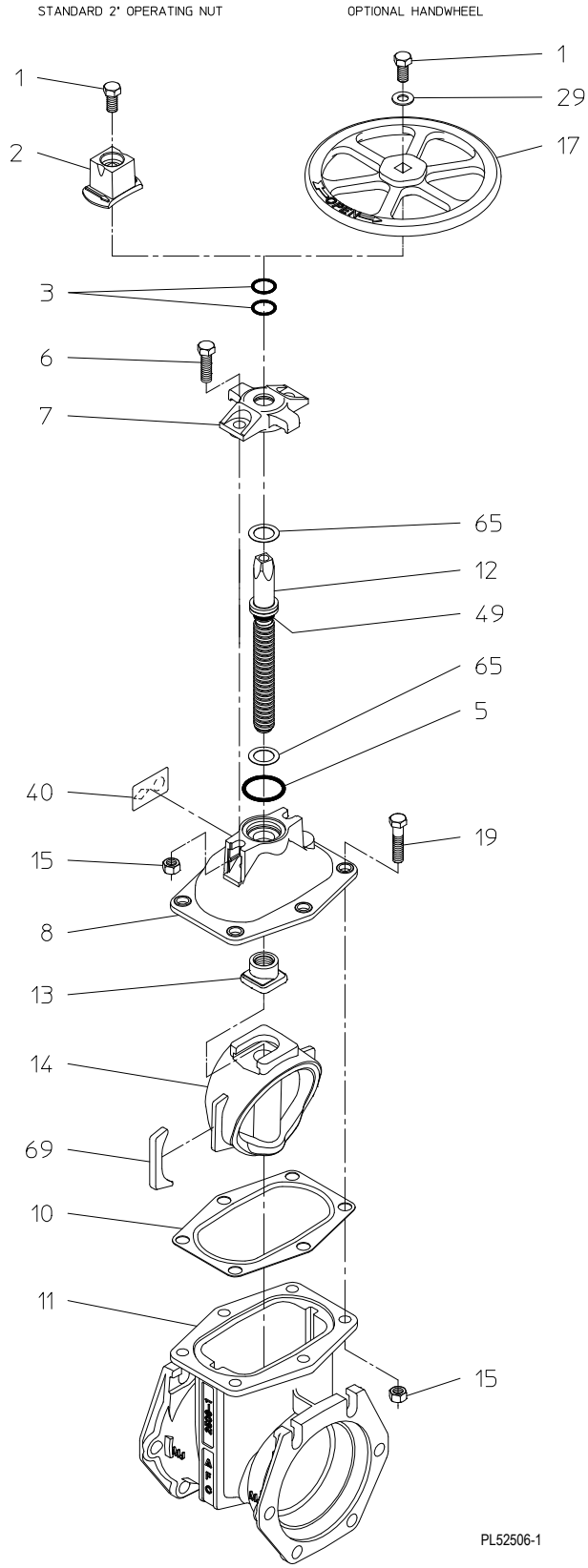

Construction shown is typical of the 6-inch size with mechanical joint end connections and is illustrative only. Construction of other sizes and end connection types vary slightly. See elsewhere on this submittal for specific details.

REF NO.	DESCRIPTION	MATERIAL
1	Hex Head Bolt, 5/8-11 x 1"	304 Stainless Steel
2	Operating Nut, 2" Square	Ductile Iron, ASTM A536
3	O-Ring	Rubber
5	Stuffing Box Gasket	Rubber O-ring
6	Hex Head Bolt, 5/8-11 x 1-3/4"	304 Stainless Steel
7	Stuffing Box	Ductile Iron, ASTM A536
8	Bonnet	Ductile Iron, ASTM A536
10	Bonnet Gasket	Rubber
11	Body	Ductile Iron, ASTM A536
12	Stem	Manganese Bronze, ASTM B763, UNS C86700
13	Wedge Nut	Manganese Bronze, ASTM B763, UNS C86700
14	Resilient Wedge	EPDM Rubber Encapsulated Ductile Iron ASTM A536
15	Hex Nut, 5/8-11	304 Stainless Steel
17	Handwheel	Ductile Iron, ASTM A536
19	Hex Head Bolt, 5/8-11 x 2-1/4"	304 Stainless Steel
29	Flat Washer, 5/8	304 Stainless Steel
40	UL/FM Label	Pressure Sensitive Acrylic Film
49	O-Ring	Rubber
65	Thrust Washer	304 Stainless Steel
69	Wedge Cover	Acetal Polymer

OPTIONAL MATERIALS ARE AS FOLLOWS

BOLTS and NUTS: 316 Stainless Steel
STEM: Cast NDZ-S Bronze, ASTM B763, UNS C99500
STEM: Stainless Steel
WEDGE NUT: Silicon Bronze, ASTM B584, UNS C87600

Open Direction: ☐ Left (C.C.W.) ☐ Right (C.W.)

NOTES:

1. Available in configurations that are UL Listed and FM Approved with 250 psig rated working pressure.
2. Meets requirements of ANSI/AWWA C515 with 250 psig rated working pressure.
3. Fusion-bonded epoxy-coated in accordance with ANSI/AWWA C550.
4. Certified to NSF/ANSI 61 & 372.

AMERICAN
FLOW CONTROL
THE RIGHT WAY

AMERICAN Flow Control
P.O. Box 2727
Birmingham, Al. 35202-2727
Phone: 1-800-326-8051
Fax: 1-800-610-3569
E-mail: afcsales@american-usa.com

Waterous Company
125 Hardman Avenue South
South St. Paul, Mn. 55075-1191
Phone: 1-888-266-3686
Fax: 1-800-601-2809
E-mail: afcsales@american-usa.com

WWW.AMERICAN-USA.COM