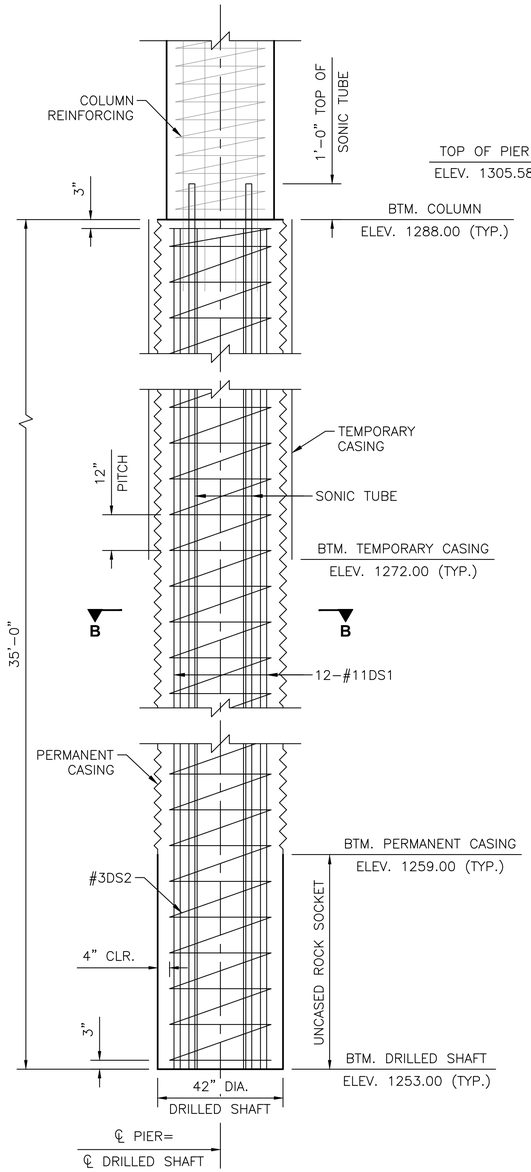

ELEVATION

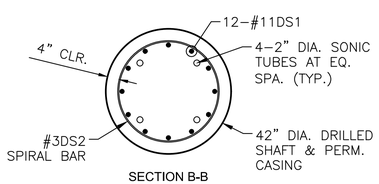

SECTION B-B

DRILLED SHAFT

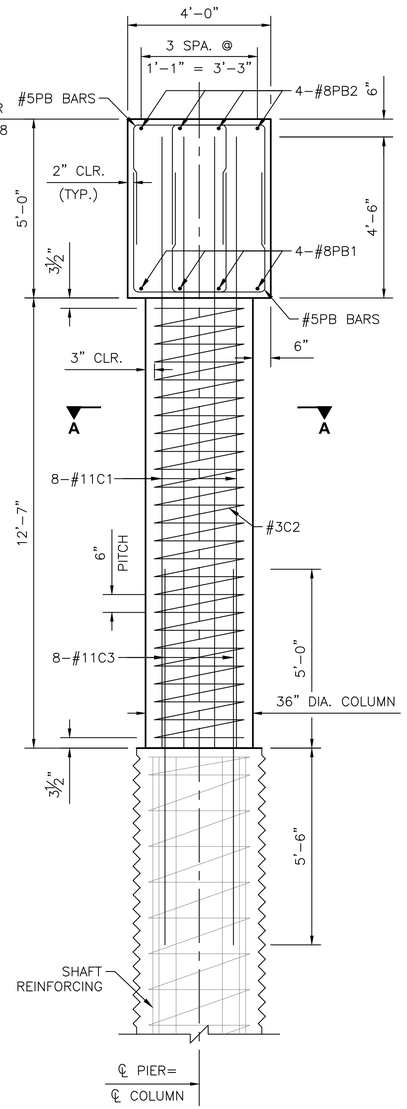

ELEVATION

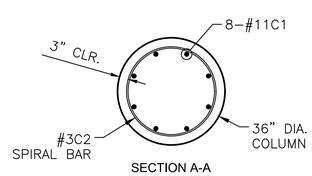

SECTION A-A

COLUMN

NOTE:
BRUSH BLAST, POWER WASH, & WATER SOAK PIER BEAM SURFACES BENEATH LIGHT TOWER PEDESTALS IMMEDIATELY PRIOR TO CASTING LIGHT TOWER PEDESTAL CONCRETE.

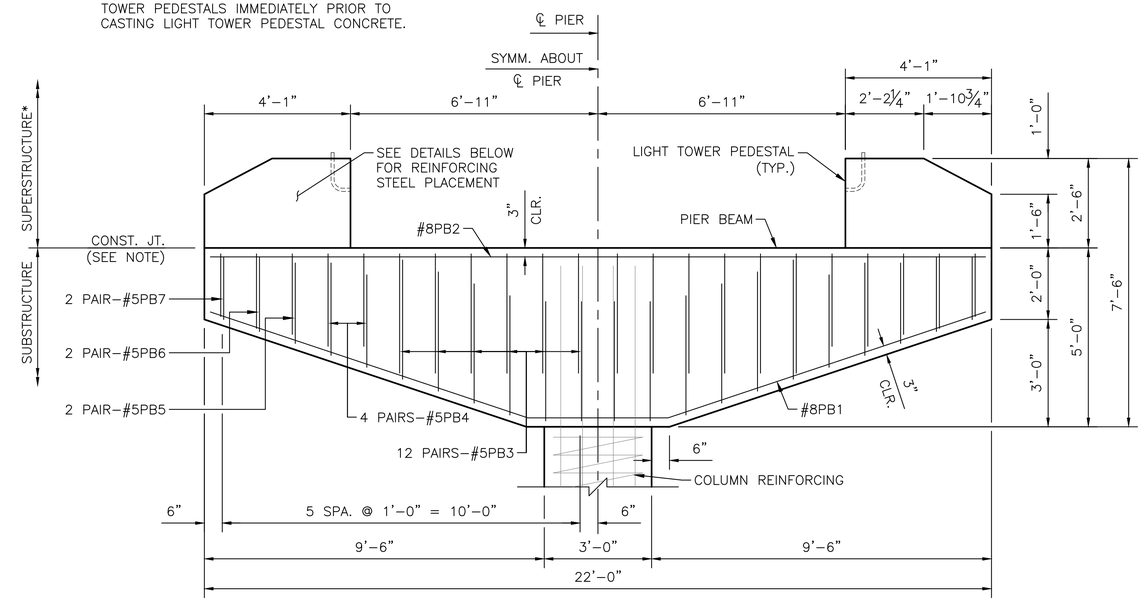

PIER ELEVATION

CONDUIT NOTE:
CONTRACTOR TO COORDINATE WITH ELECTRICIAN TO ENSURE CONDUIT IS INSTALLED 1" MIN. CLEAR OF REINFORCING BARS PRIOR TO CASTING LIGHT TOWER PEDESTAL CONCRETE (TYP. AT ALL LIGHT TOWER PEDESTALS).

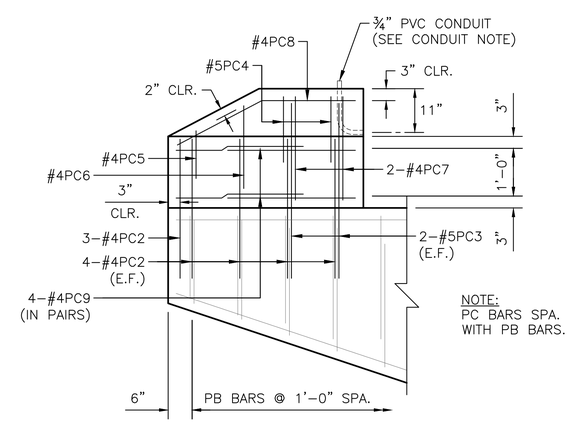

NOTE:
PC BARS SPA. WITH PB BARS.

SECTION C

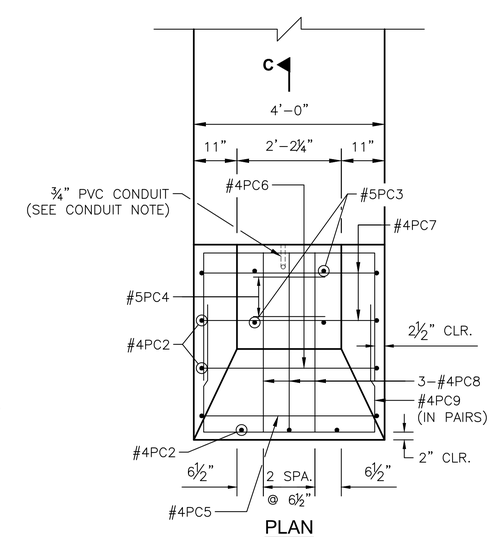

PLAN

MKEC
Wichita, KS • 316.684.9600

IMPROVEMENT PLANS FOR
15TH STREET BRIDGE OVER THE WICHITA DRAINAGE CANAL
WICHITA, KS

PIER DETAILS

PROJECT NO. 472-2023-085864
SCALE NTS

DRAWN	DESIGNED	CHECKED
RAM	DMU	JTH

NO.	REVISION	DATE
0	ISSUED FOR CONSTRUCTION	8-1-2025

SHEET NO.
37 OF 114

©2025 MKEC ENGINEERING, INC. ALL RIGHTS RESERVED WWW.MKEC.COM THESE DRAWINGS AND THEIR CONTENTS, INCLUDING BUT NOT LIMITED TO, ALL CONCEPTS, DESIGNS, & IDEAS ARE THE EXCLUSIVE PROPERTY OF MKEC ENGINEERING, INC. (MKEC), AND MAY NOT BE USED OR REPRODUCED IN ANY WAY WITHOUT THE EXPRESS CONSENT OF MKEC.

J:\PROJECTS\2023\2010\1\0431_COV_WDC BRIDGE REPLACEMENT AT 15TH STREET\0-230431 CAD\SHTS\05 CIVIL\BRIDGE\230431_PIER DETAILS.DWG
PLOTTED: Friday, August 01, 2025 @ 02:49PM