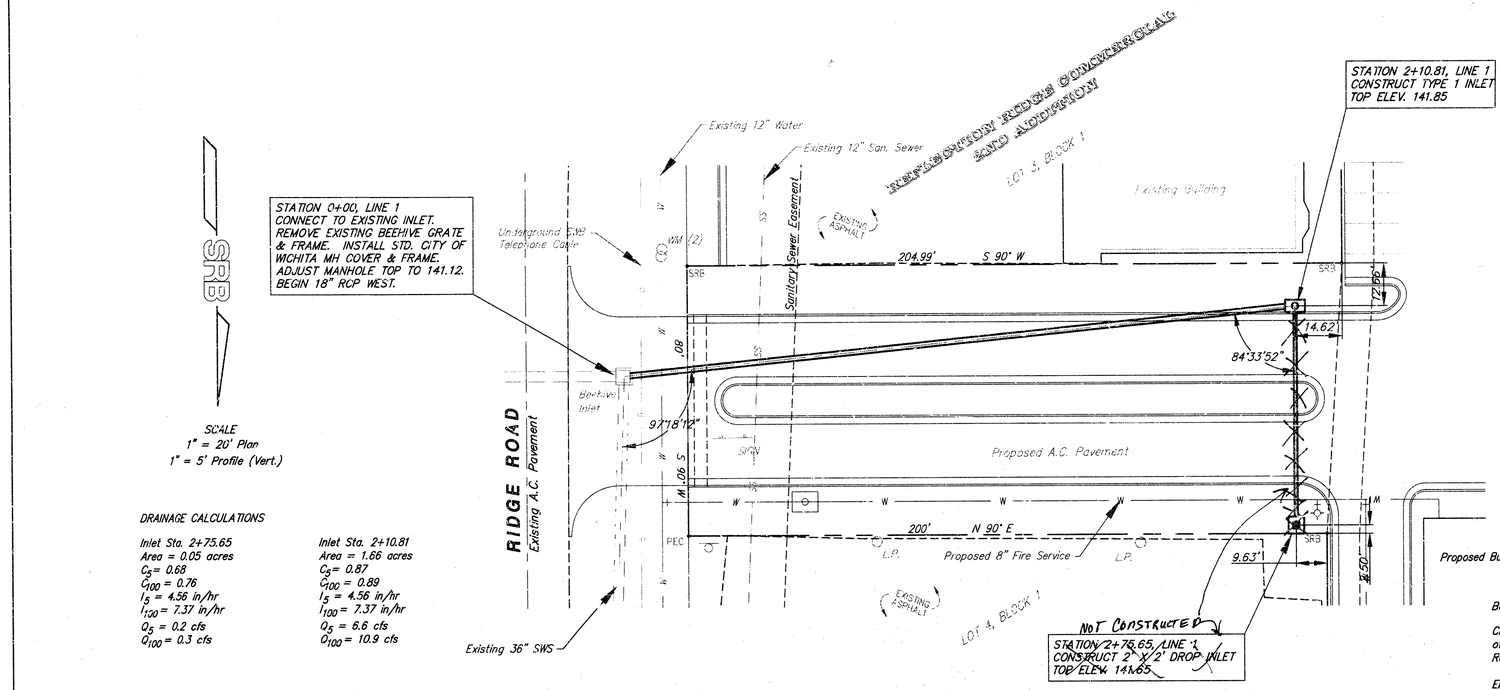

DRAINAGE CALCULATIONS

Inlet Sta. 2+75.65
Area = 0.05 acres
C_5 = 0.68
C_{100} = 0.76
I_5 = 4.56 in/hr
I_{100} = 7.37 in/hr
Q_5 = 0.2 cfs
Q_{100} = 0.3 cfs

Inlet Sta. 2+10.81
Area = 1.66 acres
C_5 = 0.87
C_{100} = 0.89
I_5 = 4.56 in/hr
I_{100} = 7.37 in/hr
Q_5 = 6.6 cfs
Q_{100} = 10.9 cfs

GENERAL NOTES

1. All work on this project shall conform to the Standard Specifications for Storm Sewer Construction of the City of Wichita, except as noted.
2. Locating Dimensions are to center of new inlet.
3. All areas within public right-fo-way which may be disturbed by Contractor's operations shall be restored in accordance with City of Wichita Administrative Regulation AR-73.
4. The Contractor shall notify Kansas One-Call (687-2470) a minimum of forty-eight (48) hours prior to any excavation.
5. The Contractor shall be responsible for preserving property irons. The Contractor will be required to re-establish any property irons which are damaged or destroyed by his construction operations. Such irons shall be re-established by a licensed land surveyor in accordance with state laws.
6. Traffic will not be affected by construction of this project.
7. The Contractor shall be responsible for cost and coordination for relocation of Southwestern Bell telephone cable.

APPROVED AS NOTED
BY CITY ENGINEER OF WICHITA

Sanitary Sewers _____
Storm Sewers VRH 5/7/97
Driveway Approaches _____
Water Mains _____
Paving _____

NOTE TO CONTRACTORS

Inspection and testing for this project are to be provided by a Licensed Consulting Engineering Firm under contract with the Owner/Developer. Said Inspection to be in accordance with the City of Wichita standard construction engineering practices and certified by a Licensed Professional Engineer. No work shall be performed in dedicated easements or public right-of-way by the Contractor without such inspection, nor shall any work be commenced without written authorization by the City Engineer.

Bench Mark:

City of Wichita Std. Disc 61' E & 66' N of intersection of centerlines, Ridge Road & 21st Street North.

Elev. 142.34 (City Datum)

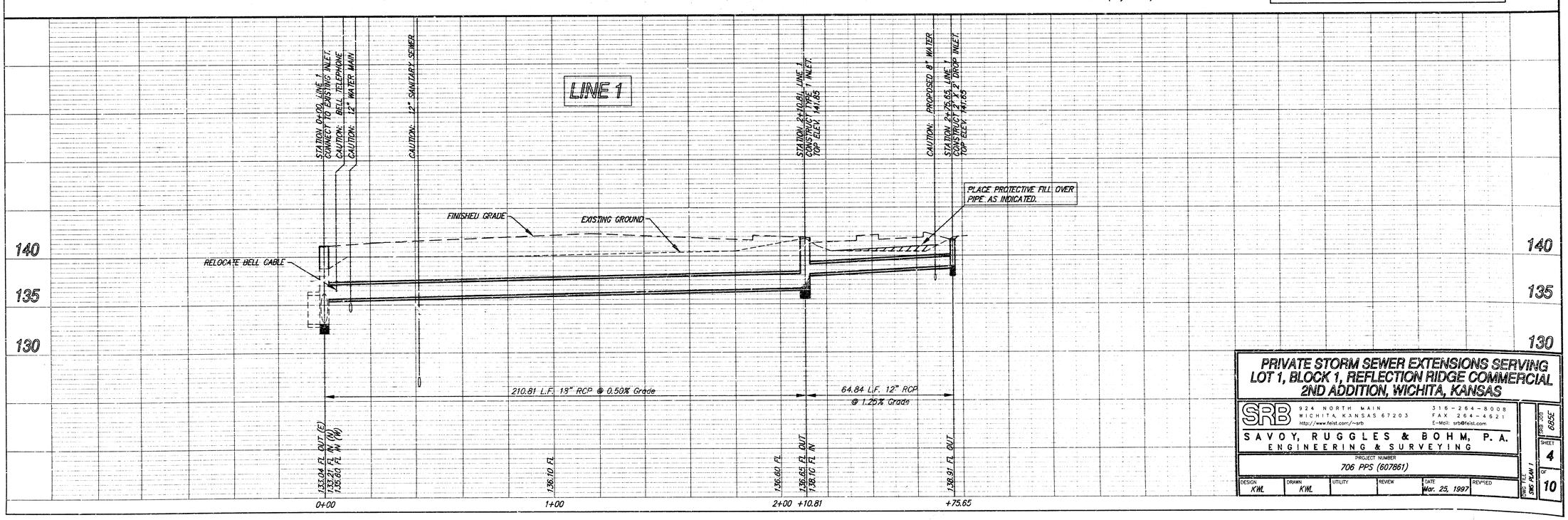

PRIVATE STORM SEWER EXTENSIONS SERVING LOT 1, BLOCK 1, REFLECTION RIDGE COMMERCIAL 2ND ADDITION, WICHITA, KANSAS

SRB
924 NORTH MAIN
WICHITA, KANSAS 67203
http://www.feist.com/~srb
316-264-8008
FAX 264-4621
E-Mail: srb@feist.com

SAVOY, RUGGLES & BOHM, P.A.
ENGINEERING & SURVEYING

PROJECT NUMBER
706 PPS (607861)

DESIGN	DRAWN	UTILITY	REVIEW	DATE	REVISED
K'WL	K'WL			Mar. 25, 1997	

DWG. NAME: SRB-706-1

SHEET 4 OF 10

PPS 685E

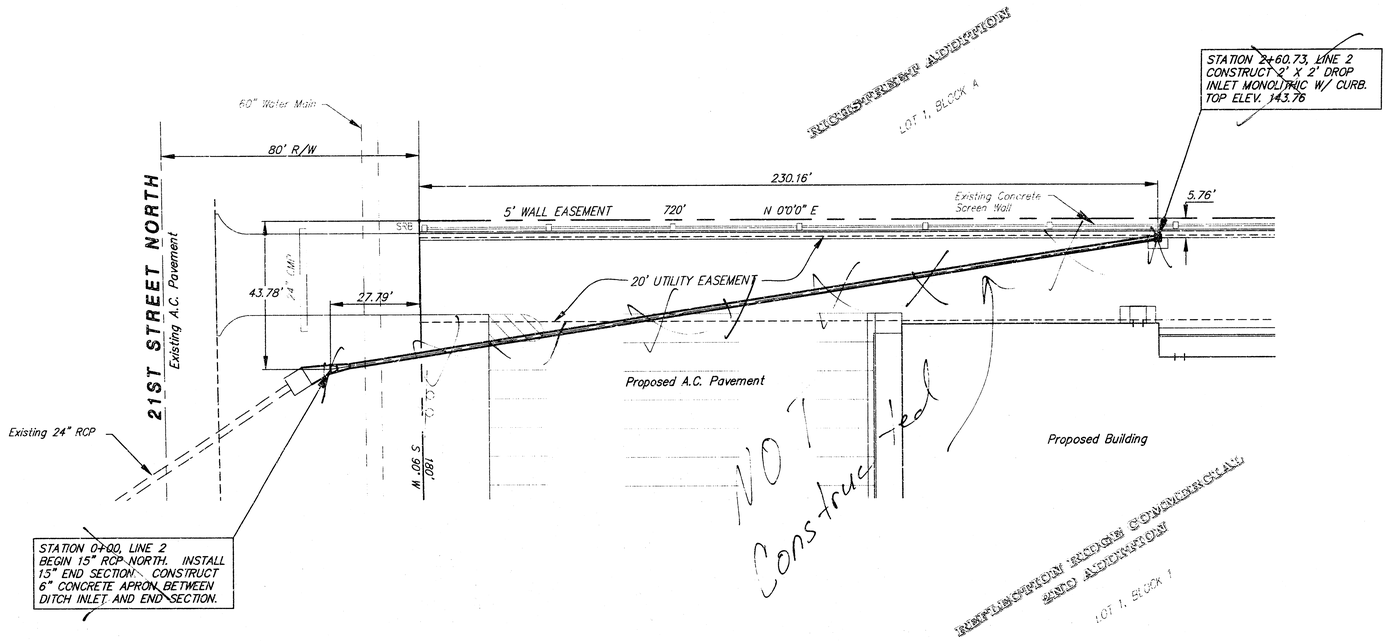

SRB

SCALE
1" = 20' Plan
1" = 5' Profile (Vert.)

DRAINAGE CALCULATIONS

Area = 0.72 acres
C_5 = 0.86
C_{100} = 0.91
I_5 = 4.56 in/hr
I_{100} = 7.37 in/hr
Q_5 = 2.8 cfs
Q_{100} = 4.8 cfs

Bench Mark:

City of Wichita Std. Disc 61' E & 66' N of intersection of centerlines, Ridge Road & 21st Street North.

Elev. 142.34 (City Datum)

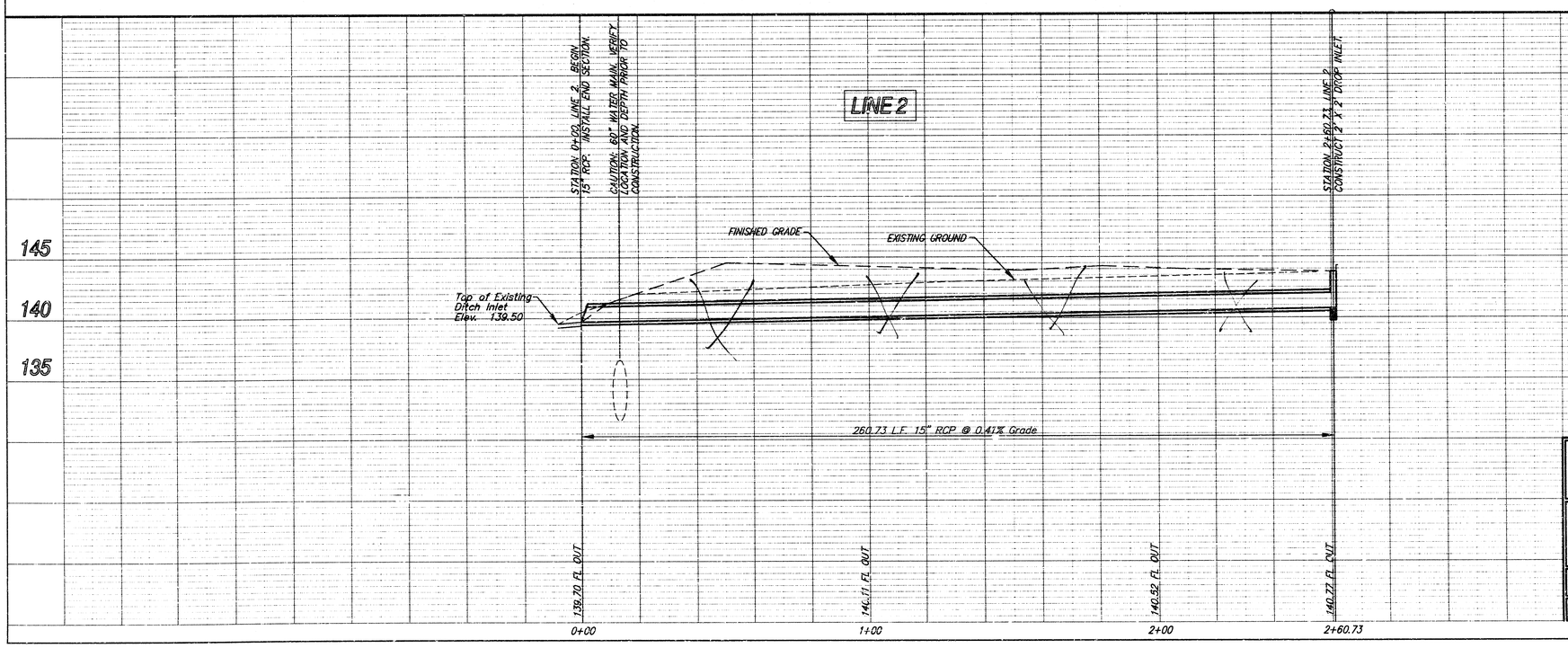

PRIVATE STORM SEWER EXTENSIONS SERVING LOT 1, BLOCK 1, REFLECTION RIDGE COMMERCIAL 2ND ADDITION, WICHITA, KANSAS

SRB
924 NORTH MAIN
WICHITA, KANSAS 67203
http://www.feist.com/~srb
316-264-8008
FAX 264-4621
E-Mail: srb@feist.com

SAVOY, RUGGLES & BOHM, P. A.
ENGINEERING & SURVEYING

PROJECT NUMBER
706 PPS (607861)

DESIGN	DRAWN	UTILITY	REVIEW	DATE	REVISED
KWL	KWL			Mar. 27, 1997	

DWG FILE SRS PLAN 2

SRB JOB 717E
SHEET 5 of 10

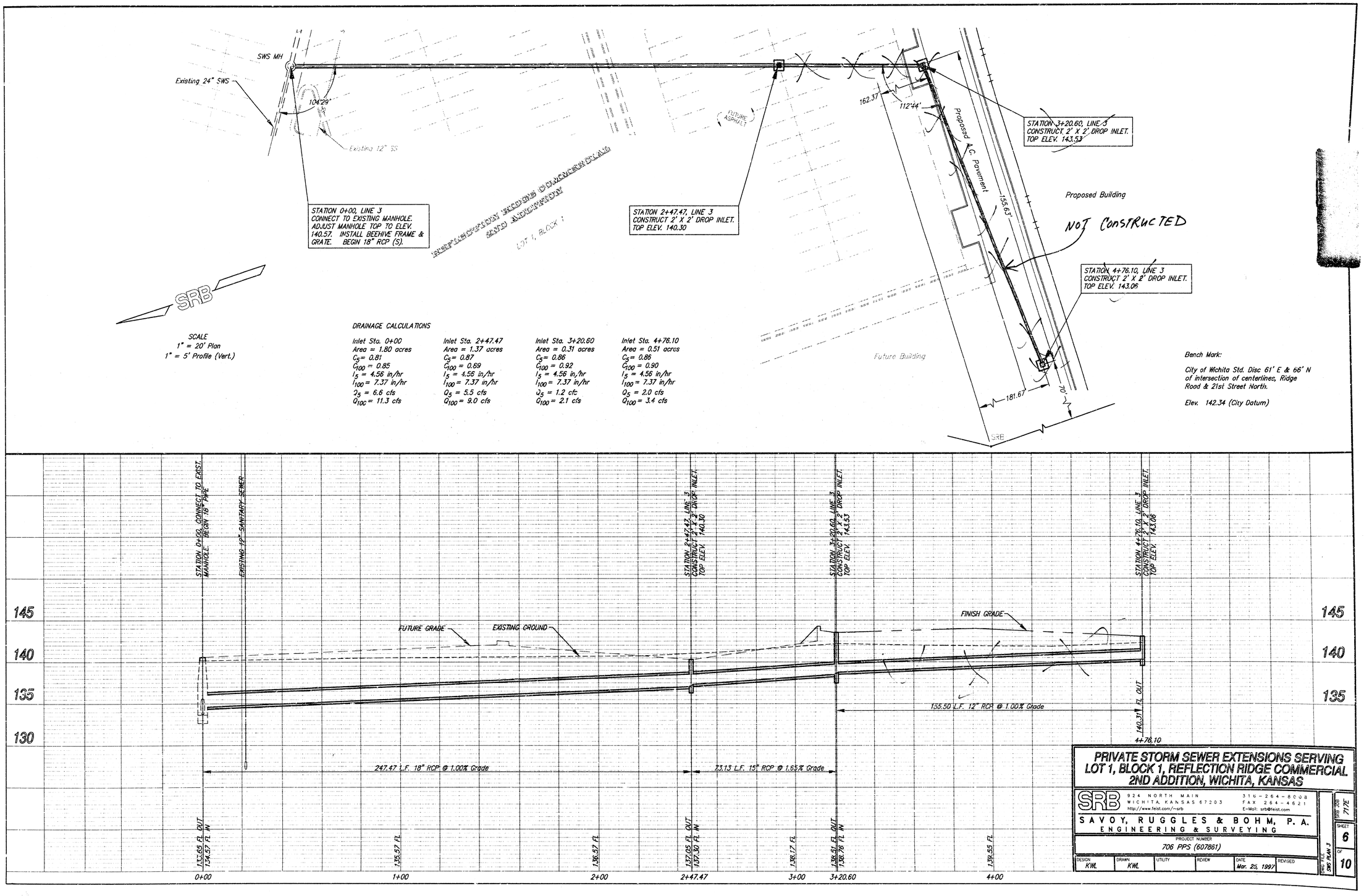

PRIVATE STORM SEWER EXTENSIONS SERVING LOT 1, BLOCK 1, REFLECTION RIDGE COMMERCIAL 2ND ADDITION, WICHITA, KANSAS

SRB
924 NORTH MAIN
WICHITA, KANSAS 67203
http://www.feist.com/~srb
316-264-8008
FAX 264-4621
E-Mail: srb@feist.com

SAVOY, RUGGLES & BOHM, P. A.
ENGINEERING & SURVEYING

PROJECT NUMBER
706 PPS (607861)

DESIGN	DRAWN	UTILITY	REVIEW	DATE	REVISED
KWL	KWL			Mar. 25, 1997	

DWG FILE SWS PLAN 3
SRB JOB 717E
SHEET 6 OF 10

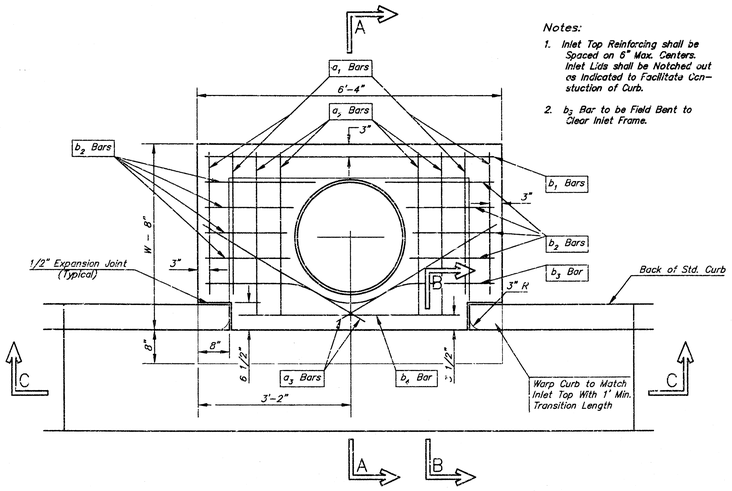

PLAN

Notes:

1. Inlet Top Reinforcing shall be Spaced on 6" Max. Centers. Inlet Lids shall be Notched out as Indicated to Facilitate Construction of Curb.
2. b_2 Bar to be Field Bent to Clear Inlet Frame.

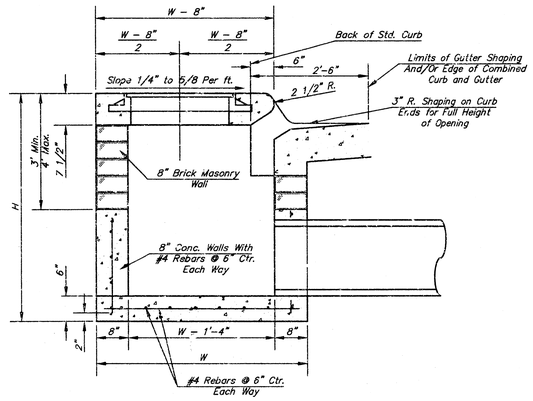

SECTION A–A

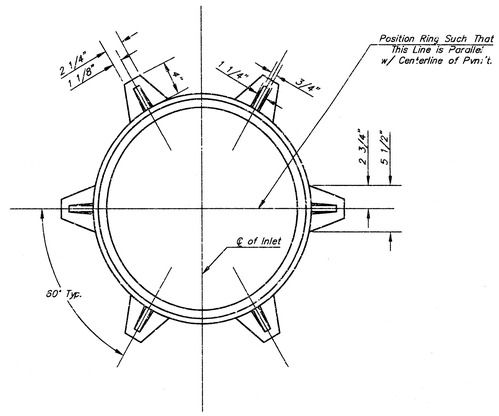

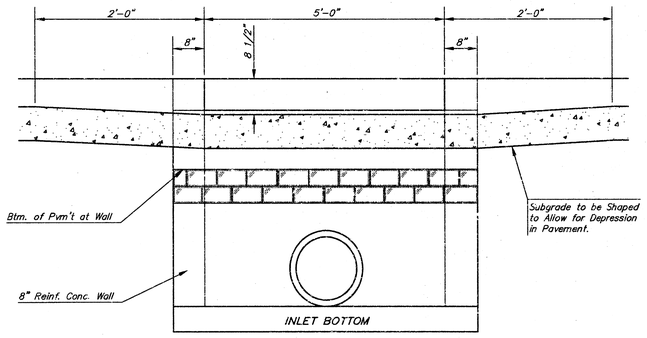

SECTION C–C

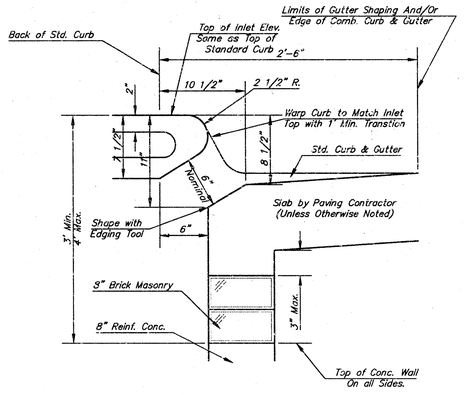

SECTION B–B

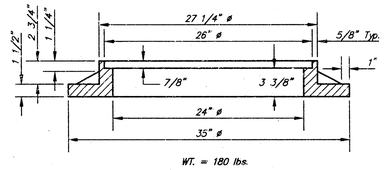

WT. = 180 lbs.

MANHOLE RING AND COVER

*See City of Wichita Standard Manhole Ring and Cover Detail Sheet for Cover Details to Be Used With Inlet Frame.

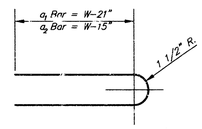

BENDING DIAGRAM

STEEL SCHEDULE

BAR		a_1	a_2	a_3	b_1 W=4'-4"	b_1 W=5'-4"	b_1 W=6'-4"	b_1 W=7'-4"	b_1 W=8'-4"	b_2	b_3	b_4	Wt. Lbs.
NUMBER		4	4	2	1	3	5	7	9	6	1	1	
SIZE		#4	#4	#4	#4	#4	#4	#4	#4	#4	#4	#6	
LENGTH	W=4'-4"	5'-7"	6'-7"	4'-0"	6'-1"	–	–	–	–	1'-9"	6'-2"	4'-8"	60±
	W=5'-4"	7'-7"	8'-7"	5'-0"	–	6'-1"	–	–	–	1'-9"	6'-2"	4'-8"	81±
	W=6'-4"	9'-7"	10'-7"	6'-0"	–	–	6'-1"	–	–	1'-9"	6'-2"	4'-8"	101±
	W=7'-4"	11'-7"	12'-7"	7'-0"	–	–	–	6'-1"	–	1'-9"	6'-2"	4'-8"	121±
	W=8'-4"	13'-7"	14'-7"	8'-0"	–	–	–	–	6'-1"	1'-9"	6'-2"	4'-8"	141±

Note: a_3 Bars to be Placed Approx. 2" Below Top of Inlet Cover.

STANDARD CURB INLET PRECAST TOPS

W	PRE-CAST TOP SIZE	PIPE SIZE	CU. YD. CONC.
4'-4"	3'-8" 6'-4" 7 1/2"	21" & SMALLER	0.38±
5'-4"	4'-8" 6'-4" 7 1/2"	24" & 30"	0.51±
6'-4"	5'-8" 6'-4" 7 1/2"	36" & 42"	0.64±
7'-4"	6'-8" 6'-4" 7 1/2"	48" & 54"	0.77±
8'-4"	7'-8" 6'-4" 7 1/2"	60" & 66"	0.90±

GENERAL NOTES

1. Concrete tops to be installed on thin mortar cushion to insure full support along brick walls. Concrete tops may be cast in place or precast. Concrete used for inlet construction shall be concrete pavement mix.
2. Contractor shall have the option of constructing 8" brick masonry walls between the concrete inlet base and top on this inlet when W=6'-4" and H=7'-0" or less.
3. Inlet invert shall be shaped with 8 sack sand mix concrete to create flow channels and to increase hydraulic efficiency such that the inlet will be self cleaning between all inlet and/or outlet pipes.
4. The ends of all pipes installed in inlets shall be cut off flush with the inside face of the inlet wall.

THE CITY OF WICHITA

CITY ENGINEER'S OFFICE
CITY HALL – SEVENTH FLOOR
455 NORTH MAIN STREET
WICHITA, KANSAS 67202
(316) 268-4501
(316) 268-4114 FAX

STANDARD TYPE 1 CURB INLET OPENING = 6'x5'-0"

M. E. LINDEBAK P.E. – CITY ENGINEER

PROJECT NUMBER 706 PPS

INDEX CODE 607851

DATE MAR 96

SHEET 7 OF 10

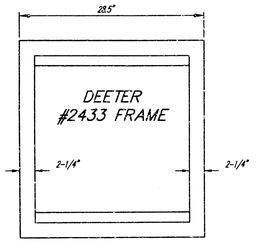

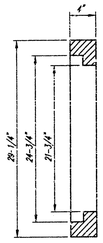

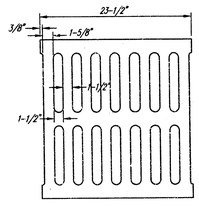

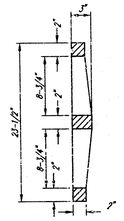

DEETER #2433 GRATE

24" x 24" Frame and Grate Detail

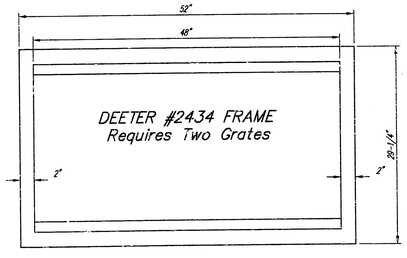

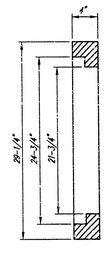

Double 24" x 24" Frame Detail

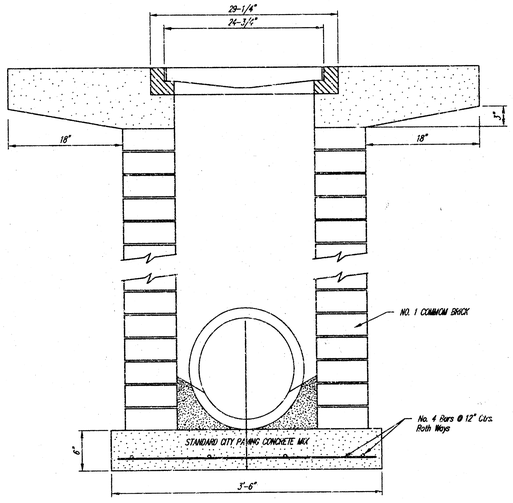

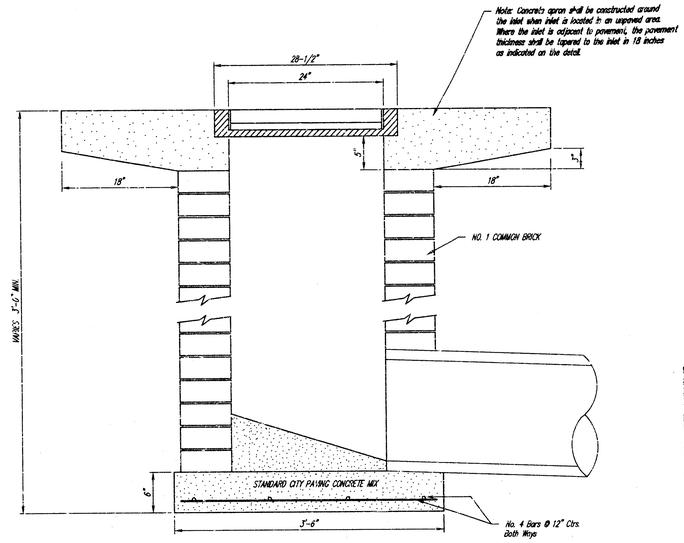

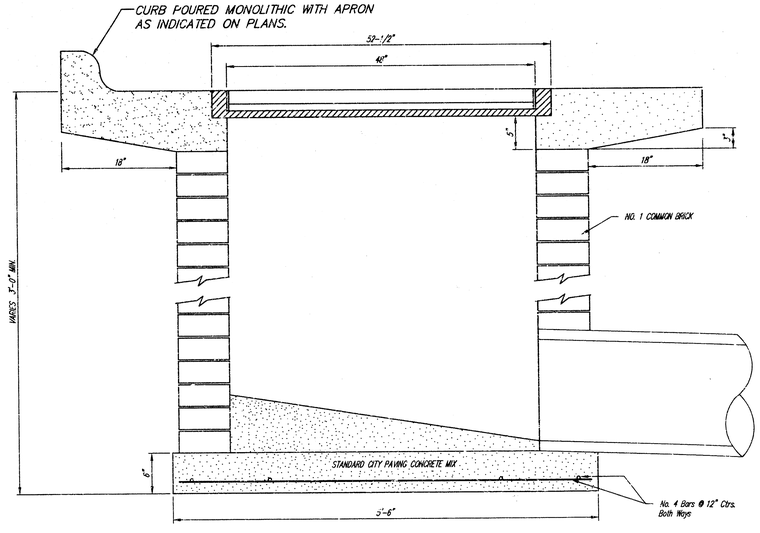

DROP INLET DETAILS	8
706 PPS (607851)	10

S-F-8-8-1-5