SWS TO SERVE LOT 2, BLOCK 1
NEWMARKET SQUARE
AN ADDITION TO WICHITA, SEDGWICK COUNTY, KANSAS
PRIVATE PROJECT NO. 1164PPS(607861)

SCALE: 1" = 100'

● = IRON FOUND

TBM: BRASS CAP "TAB" CHISELED "3" E. SIDE CONCRETE POND OVERFLOW PLATE SITE. ELEV.=1184.33 CITY DATUM

CITY W.R.M.: CITY OF WICHITA STD. BENCH MARK D-30 64' EAST AND 99' SOUTH OF THE INTERSECTION OF THE CENTERLINES MAIZE ROAD AND 21ST STREET NORTH. ELEV.=1184.3 CITY DATUM

VICINITY MAP

ESTABLISHED MINIMUM PAD (LOWEST OPENING) ELEVATIONS ARE AS FOLLOWS.
LOT 1, BLOCK 1 = 1185.6 CITY DATUM, 1350.0 M.S.L.

APPROVED AS NOTED
BY CITY ENGINEER OF WICHITA

SANITARY SEWERS _____
STORM SEWERS VRH 9/28/01
DRIVEWAY APPROACHES _____
WATER MAINS _____
PAVING _____

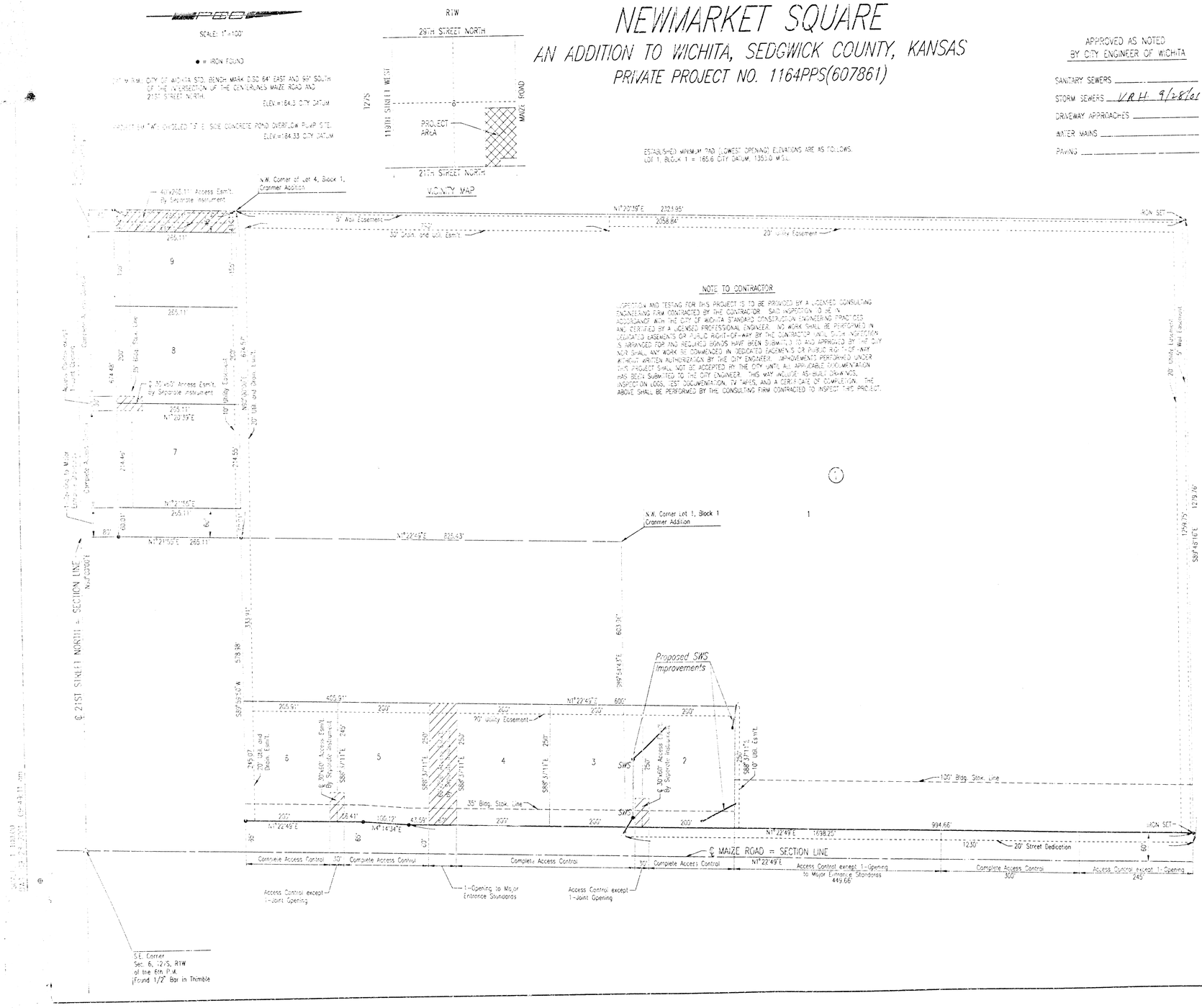
NOTE TO CONTRACTOR

INSPECTION AND TESTING FOR THIS PROJECT IS TO BE PROVIDED BY A LICENSED CONSULTING ENGINEERING FIRM CONTRACTED BY THE CONTRACTOR. SAID INSPECTION SHALL BE IN ACCORDANCE WITH THE CITY OF WICHITA STANDARD CONSTRUCTION ENGINEERING PRACTICES AND CERTIFIED BY A LICENSED PROFESSIONAL ENGINEER. NO WORK SHALL BE PERFORMED IN DEDICATED EASEMENTS OR PUBLIC RIGHT-OF-WAY BY THE CONTRACTOR UNTIL SUCH INSPECTION IS ARRANGED FOR AND REQUIRED SIGNOFFS HAVE BEEN SUBMITTED TO AND APPROVED BY THE CITY. NOR SHALL ANY WORK BE COMMENCED IN DEDICATED EASEMENTS OR PUBLIC RIGHT-OF-WAY WITHOUT WRITTEN AUTHORIZATION BY THE CITY ENGINEER. IMPROVEMENTS PERFORMED UNDER THIS PROJECT SHALL NOT BE ACCEPTED BY THE CITY UNTIL ALL APPLICABLE DOCUMENTATION HAS BEEN SUBMITTED TO THE CITY ENGINEER. THIS MAY INCLUDE AS-BUILT DRAWINGS, INSPECTION LOGS, TEST DOCUMENTATION, TV TAPES, AND A CERTIFICATE OF COMPLETION. THE ABOVE SHALL BE PERFORMED BY THE CONSULTING FIRM CONTRACTED TO INSPECT THIS PROJECT.

GENERAL NOTES

1. ALL CONSTRUCTION AND MATERIALS TO COMPLY WITH CITY OF WICHITA SPECIFICATIONS AND STANDARDS.
2. ALL ELEVATIONS SHOWN ARE BASED ON CITY OF WICHITA DATUM.
3. THE CONTRACTOR SHALL VERIFY THE EXISTING UTILITIES AS TO SIZE, LOCATION, OVERGRADE AND ELEVATION TO LESS THAN 50 FEET.
4. AT LEAST 72 HRS PRIOR TO BEGINNING THE WORK IN EACH PUBLIC RIGHT-OF-WAY AND EASEMENT, THE CONTRACTOR SHALL NOTIFY THE CITY OF WICHITA AND THE KANSAS ONE-CALL SYSTEM, INC. (1-800-DIG-SAFE OR 1-800-344-7233) FOR THE LOCATION OF ALL UTILITIES. THE CONTRACTOR SHALL COORDINATE WORK TO AVOID CONFLICTS WITH EXISTING LINES WITHIN THE PROJECT AREA.
5. UNDERGROUND UTILITY SERVICE LINES AND DISTRIBUTION SYSTEMS WITHIN THE PROJECT LIMITS ARE TO BE ADJUSTED AS NECESSARY BY THE UTILITY COMPANIES PRIOR TO CONSTRUCTION UNLESS THE PLANS OR SPECIAL PROVISIONS INDICATE OTHERWISE. ADJUSTMENT BY THE CONTRACTOR OR BY THE UTILITY COMPANY AT THE CONTRACTOR'S EXPENSE SHALL BE AS DIRECTED BY THE ENGINEER. ALL UTILITIES TO BE ADJUSTED BY THE CONTRACTOR SHALL BE LOCATED PRIOR TO THE START OF CONSTRUCTION. EXISTING UTILITIES AND OTHER FEATURES SHOWN ON THE PLANS REPRESENT THE BEST INFORMATION AVAILABLE TO THE DESIGNER. THE CONTRACTOR IS CAUTIONED THAT THE PLANS MAY NOT REFLECT ALL UTILITIES WITHIN THE PROJECT LIMITS AND THAT THE LOCATIONS SHOWN FOR UTILITIES AND FEATURES SHOWN ON THE PLANS MAY NOT BE EXACT OR MAY NOT INCLUDE ALL CONFLICTS WITH PROPOSED CONSTRUCTION.
6. THE CONTRACTOR SHALL BE RESPONSIBLE FOR PROTECTING AND REPAIRING ANY DAMAGE TO THE CONSTRUCTION, INCLUDING BUT NOT LIMITED TO, PAVEMENT, CURB AND GUTTER, SIDEWALK, PROPERTY, ROAD, PATH ARE DAMAGED OR DESTROYED BY THE CONTRACTOR'S CONSTRUCTION OPERATIONS, SUCH ROAD, PATH, OR PROPERTY SHALL BE RESTORED BY A LICENSED LAND SURVEYOR IN ACCORDANCE WITH STATE LAWS.
7. CONTRACTOR SHALL PROVIDE FOR THE DRAINAGE AWAY FROM ALL MANHOLE COVERS.
8. ALL LANDSCAPE AREAS ON ADJACENT PROPERTIES DISTURBED BY CONSTRUCTION OF THE SANITARY SEWER IMPROVEMENTS SHALL BE RESTORED WITH THE SAME GRASS SOD AS EXISTING. ADDITIONAL LANDSCAPE AREAS SHALL NOT BE LIMITED TO, THE FOLLOWING: SOD, SEED, SEEDING MULCH AND OR EROSION CONTROL BLANKETS. ALL SEEDING SHALL BE IN ACCORDANCE WITH THE SPECIFICATIONS.
9. RUBBLE FROM THE REMOVAL OF MISCELLANEOUS STRUCTURES, INCLUDING ANY TREES REMOVED, ANY TREE TRIMMINGS SHALL BE DISPOSED OF AS PROVIDED BY THE CONTRACTOR. THESE SITES SHALL ALSO BE APPROVED BY THE ENGINEER AS TO SUITABILITY, APPEARANCE, AND SITE USAGE. ANY TREES THAT, IN THE OPINION OF THE ENGINEER, ARE DEEMED TO BE OF UNSIGHTLY APPEARANCE WILL NOT BE APPROVED. ALL DISPOSAL SITES MUST BE APPROVED BY THE KANSAS DEPARTMENT OF HEALTH AND ENVIRONMENT. MATERIAL EITHER STOCKED OR DISPOSED OF IN A FLOOD PLAIN WILL REQUIRE A KANSAS STATE BOARD OF AGRICULTURE PERMIT. ANY MATERIAL DUMPED IN WATERS OF THE UNITED STATES OR WETLANDS IS SUBJECT TO U.S. CORPS OF ENGINEERS PERMITTING REGULATIONS. ANY MATERIAL PLACED OR STOCKPILED BEYOND APPROVED CONSTRUCTION LIMITS MAY REQUIRE ARCHAEOLOGICAL INVESTIGATIONS UNLESS BURIED IN A PREVIOUSLY APPROVED DISPOSAL LOCATION.
10. THE CONTRACTOR SHALL AVOID REMOVAL OR TRIMMING OF ANY TREES OR SHRUBS WHERE POSSIBLE. WHERE THE CONTRACTOR BELIEVES THE REMOVAL OR TRIMMING IS UNAVOIDABLE, HE SHALL COORDINATE SUCH WORK WITH THE ENGINEER.
11. THE CONTRACTOR SHALL PREVENT ANY CONSTRUCTION DEBRIS FROM ENTERING THE EXISTING STORM SEWER DURING CONSTRUCTION.
12. THE CONTRACTOR SHALL SEED ALL AREAS DISTURBED BY CONSTRUCTION ACTIVITIES WITH TEMPORARY RYE GRASS. RYE GRASS SEED SHALL BE PLANTED AT A MINIMUM RATE OF SIX (6) POUNDS PER ONE THOUSAND (1000) SQUARE FEET. THIS TEMPORARY SEEDING MAY BE OMITTED ONLY IF PERMANENT SEEDING IS TO BE COMPLETED WITHIN 14 DAYS AFTER THE AREA HAS BEEN DISTURBED.
13. THE CONTRACTOR IS REQUIRED TO PREVENT SEDIMENT LADEN RUNOFF FROM ENTERING ADJACENT ROADWAYS AND STORM SEWER SYSTEMS. THIS MAY INCLUDE ERECTING SILT FENCE ALONG ADJACENT ROADWAYS, INSTALLING INLET PROTECTION FOR INLETS ON WOODLAWN AND 37TH STREETS ALONG 37TH STREET NORTH OR TEMPORARY SEEDING OF DISTURBED AREAS THAT WILL NOT HAVE ACTIVITY FOR MORE THAN 14 DAYS. SEE LANDSCAPE PLAN AND SPECIFICATIONS FOR SEEDING, MULCHING AND TYPE TO BE USED. REFER ALSO SEE SH. NOS. C15 FOR EROSION CONTROL PLAN AND DETAILS.
14. THE WATER DEPARTMENT SHALL FIELD LOCATE WATER VALVES ONE TIME DURING CONSTRUCTION WHEN REQUESTED BY THE CONTRACTOR. IT SHALL BE THE CONTRACTOR'S RESPONSIBILITY TO PRESERVE SUCH FIELD LOCATIONS DURING THE CONSTRUCTION PROCESS. WATER VALVES, WATER VALVE BOXES, OR FIRE HYDRANTS DAMAGED DURING CONSTRUCTION SHALL BE REPAIRED BY THE CONTRACTOR AT HIS OWN EXPENSE.

BOOKED
5-31-02
MCG
P-LOT C-2.3



DARWIN R. CROW LICENSED 14956 KANSAS PROFESSIONAL ENGINEER 9/28/01

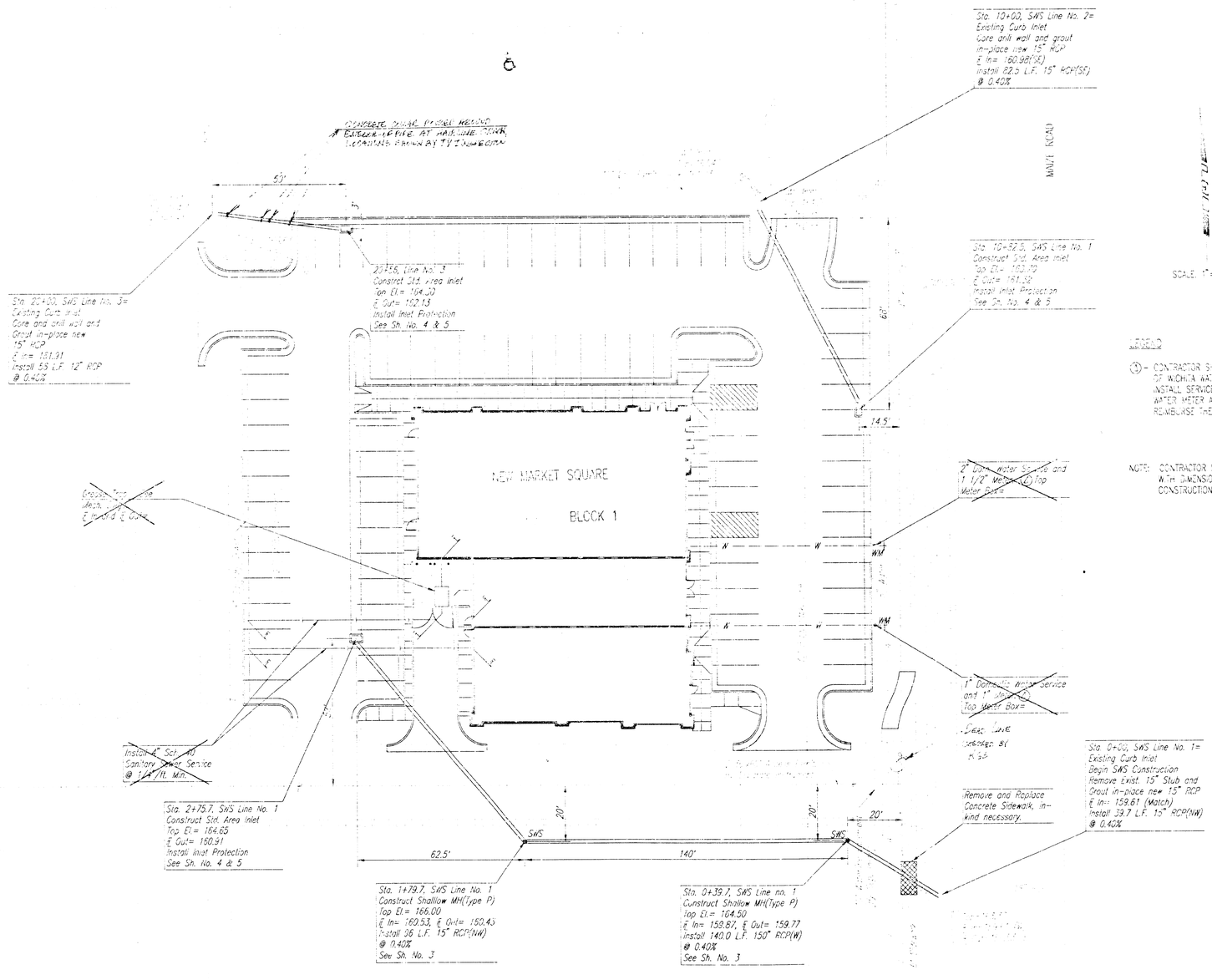
NEW MARKET SQUARE

PLAT AND GENERAL NOTES
LOT 2, BLOCK 1

Professional Engineering Consultants, P.A.
303 S. TOPEKA • WICHITA, KANSAS 67202
316 262 2691 • FAX 316 262 2693

Designed by	DRC	Checked by	
Drawn by	SAD	Date SEPT. 2001	Job No. 0498

AS-BUILT INFORMATION



LEGEND

① - CONTRACTOR SHOULD SCHEDULE WITH THE CITY OF WICHITA WATER DEPARTMENT TO TAP THE MAIN, INSTALL SERVICE LINE TO METER, AND SET THE WATER METER AND METER BOX. CONTRACTOR SHALL REIMBURSE THE CITY FOR ALL COST FOR THIS WORK.

NOTE: CONTRACTOR SHALL VERIFY ALL INLET LOCATIONS WITH DIMENSIONED SITE PLAN PRIOR TO BEGINNING CONSTRUCTION

NEW MARKET SQUARE

UTILITY PLAN

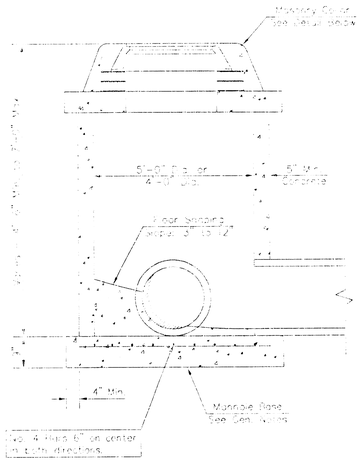
LOT 2, BLOCK 1

Professional Engineering Consultants, P.A.
303 S. TOPEKA • WICHITA, KANSAS 67202
316 262-2691 • FAX 316 262-1003

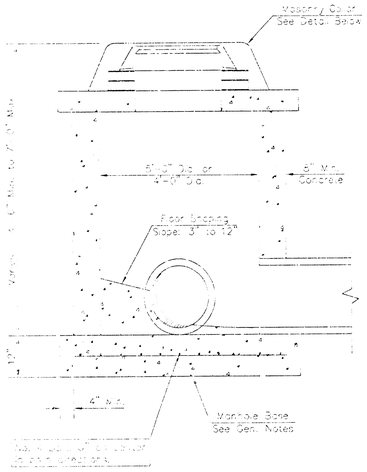
Designed by	DRC	Checked by	
Drawn by	SAD	Date	SEPT. 2001

Job No. 01-419

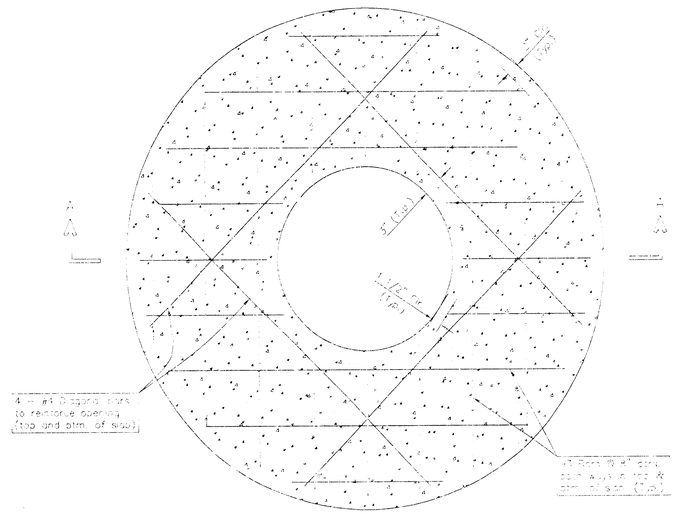
C:\DRC_JOBS\01-419\DWG\SHEET\ 10:20:00
C:\DRC_JOBS\01-419\DWG\ 09-29-2001 10:33:14 am



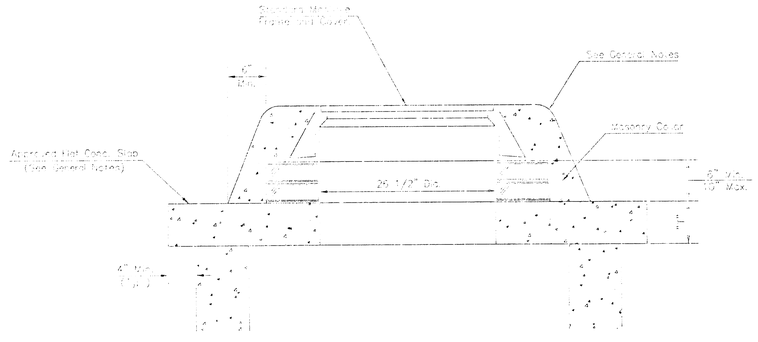
SHALLOW TYPE "P" MANHOLE



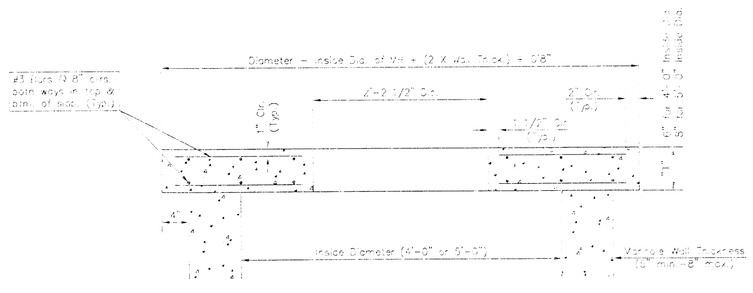
SHALLOW TYPE "C" MANHOLE



PLAN



MASONRY COLLAR DETAIL

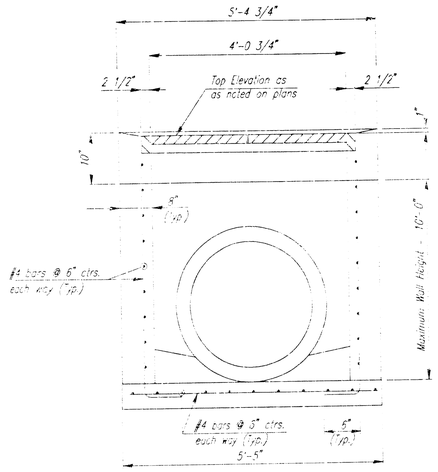


SECTION A-A

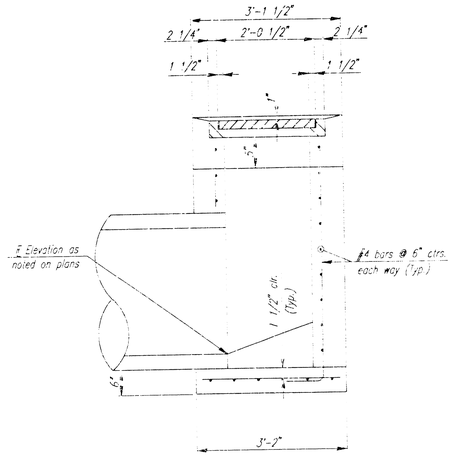
FLAT CONCRETE SLAB DETAILS

GENERAL NOTES

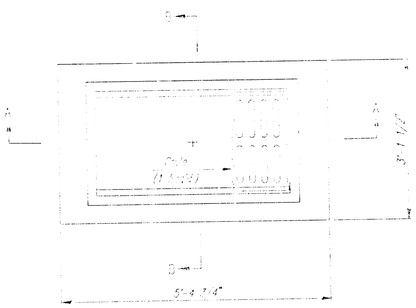
1. Mortar used in masonry construction shall consist of one part cement to three parts sand. Concrete used in manhole bases shall conform to the requirements of Class A concrete for concrete pavement in section 401 of the City standard specifications, except that the use of calcium chloride will not be permitted. Concrete may be placed in the forms by means of a chute, provided the mixture is not too wet to prevent segregation of the materials. Concrete may be placed in forms and around reinforcing steel by means of a bucket. Concrete shall be placed in horizontal layers not more than 6" thick and each layer shall be thoroughly spaded and tamped. Concrete shall be placed in one continuous operation to the top of the base. Where pipe sizes are 24" or larger, the base shall be constructed of precast concrete manhole base sections with an inside diameter of 4'-0". Where pipe sizes are 30" or larger, the base shall be constructed of precast concrete manhole base sections with an inside diameter of 5'-0". Where pipe sizes are 24" or larger, the base shall be constructed of 5'-0" diameter manhole base sections with an inside diameter of 5'-0". Concrete manhole bases shall be constructed in accordance with the details shown on the plans for the sizes and types of manholes specified. Concrete shall be placed in the forms by means of a chute, provided the mixture is not too wet to prevent segregation of the materials. Concrete may be placed in forms and around reinforcing steel by means of a bucket. Concrete shall be placed in horizontal layers not more than 6" thick and each layer shall be thoroughly spaded and tamped. Concrete shall be placed in one continuous operation to the top of the base. Where pipe sizes are 24" or larger, the base shall be constructed of precast concrete manhole base sections with an inside diameter of 4'-0". Where pipe sizes are 30" or larger, the base shall be constructed of precast concrete



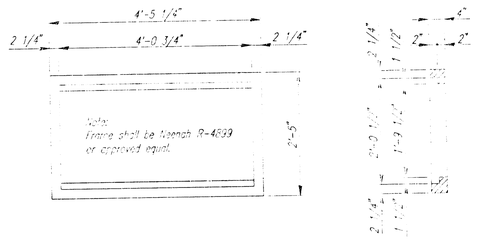
SECTION A-A



SECTION B-B

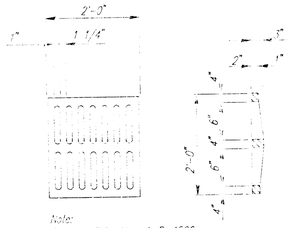


PLAN



FRAME DETAIL
(Wt.=440 Lbs.)

Note:
Frame to mate with 2 Neenah R-4826 Grates or approved equal.



Note:
Grate shall be Neenah R-4826 or approved equal.

GRATE DETAIL
(Wt.=190 lbs.)
(2 Required)

GENERAL NOTES-AREA INLETS

CONCRETE SHALL HAVE A MINIMUM 28 DAY COMPRESSIVE STRENGTH OF 4000 PSI. ALL REINFORCING SHALL BE FIELD CUT AND BENT COLD. ALL BENDS SHALL BE MADE AROUND A PIN HAVING A DIAMETER NOT LESS THAN SIX TIMES THE NOMINAL DIAMETER OF THE BAR.

REINFORCING STEEL SHALL BE GRADE 60, A.S.T.M. A615.

ALL REINFORCING STEEL SHALL BE FURNISHED, CUT AND BENT TO THE DIMENSIONS AND SHAPES AS SHOWN ON THE PLANS.

WIRE FABRIC SHALL BE WELDED STEEL WIRE FABRIC SHALL BE OF THE SIZES AND WEIGHTS AS SHOWN ON THE PLANS. ALL DIMENSIONS SHALL BE CONSIDERED AS NOMINAL AND ANY DEVIATION FROM THE DIMENSIONS SHOWN ON THE PLANS SHALL BE APPROVED BY THE ENGINEER. THE FINISHED CONCRETE SHALL BE OF UNIFORM QUALITY, FREE FROM BLEMISHES, PITTINGS, RUNS, STAINS, DISCOLORATIONS OR OTHER DEFECTS.

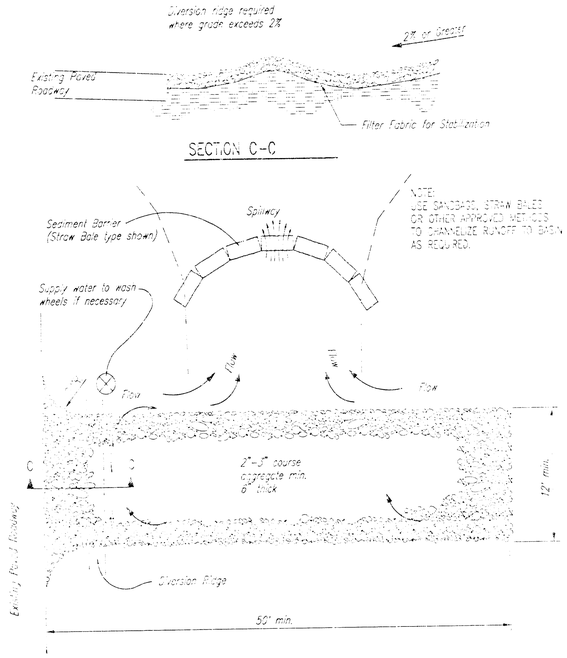
INLET FLOOR SHALL BE SHAPED WITH REINFORCED CONCRETE (9 SACK MIX) TO CREATE FLOW CHANNELS AND TO INCREASE HYDRAULIC EFFICIENCY SUCH THAT THE INLET WILL BE SELF CLEANING BETWEEN ALL INLET AND/OR OUTLET PIPES.

PIPES ENTERING EXISTING STRUCTURES SHALL BE CENTERED ON INSIDE FACE OF WALL.

ALL EXPOSED STRUCTURAL STEEL SHALL BE PAINTED WITH A COAT OF ASPHALTIC ZINC PRIMER AND THEN WITH A TOP COAT OF OR A FIELD COAT OF ORGANIC ZINC PAINT COAT TO BE 3 TO 4 MILS. STRUCTURAL STEEL USED TO FABRICATE THE SPECIAL AREA INLET FRAME SHALL COMPLY WITH A.S.T.M. A36. WELDING SHALL CONFORM TO THE STRUCTURAL WELDING CODE A.W.S. D1.1-88.

AREA INLETS MAY BE PRECAST AT THE CONTRACTOR'S OPTION, WITH APPROVAL OF THE ENGINEER.

STANDARD AREA INLET (2'X'4')



SECTION C-C

STABILIZED CONSTRUCTION ENTRANCE

NOTES:

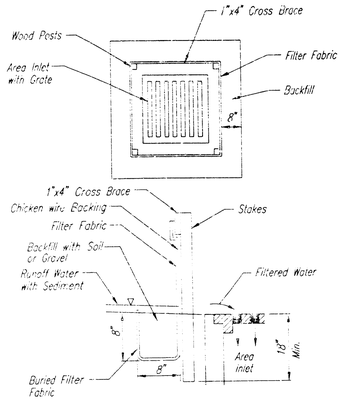
1. THE ENTRANCE SHALL BE MAINTAINED IN A CONDITION THAT WILL PREVENT TRACKING OR FLOWING OF SEDIMENT ONTO PUBLIC RIGHTS-OF-WAY. THIS MAY REQUIRE TOP DRESSING, REPAIR AND/OR CLEANOUT OF ANY MEASURES USED TO TRAP SEDIMENT.
2. WHEN NECESSARY, WHEELS SHALL BE CLEANED PRIOR TO ENTRANCE ONTO PUBLIC RIGHT-OF-WAY.
3. WHEN WASHING IS REQUIRED, IT SHALL BE DONE ON AN AREA STABILIZED WITH CRUSHED STONE THAT DRAINS INTO AN APPROVED SEDIMENT TRAP OR SEDIMENT BASIN, AS SHOWN ABOVE.
4. CARE SHALL BE USED IN REMOVING SEDIMENT DEPOSITED ON THE PAVED ROADWAY. WHERE WASHING MAY BE REQUIRED IF STABILIZED ENTRANCE IS NOT SUFFICIENT TO KEEP MUD FROM BEING TRACKED ONTO ADJACENT STREET. ENTRANCE SHALL EXTEND FROM BACK OF CURB TO SHOULDER.

SEDIMENT CONTROL DETAILS

MISCELLANEOUS DETAILS

Professional Engineering Consultants, P.A.
303 S. TOPEKA • WICHITA, KANSAS 67202
316 262 2691 • FAX 316 262 3063

Designed by: DRC	Checked by:
Drawn by: SAC	Date: SEPT. 2001 Job No. 01438



SILT FENCE BARRIERS FOR AREA INLETS
(INLET PROTECTION)

Material Specification:

Silt fence fabric should conform to the AASHTO M288 96 silt fence specification.
The wire or polymeric mesh backing used to help support the silt fence fabric should conform to the AASHTO M288 96 silt fence specification.
The posts used to support the silt fence fabric should be a hardwood material with the following minimum dimensions: 2" square (nominal) by 4' long.
The material used to frame the tops of the posts should be 1" by 4" boards.
Silt fence fabric and support backing should be attached to the wooden posts and frame with staples, wire, zip ties, or nails.

Placement:

Place a silt fence drop inlet barrier in a location where it is unlikely to be overlapped. Water should flow through silt fence, not over it. Silt fence barriers for area inlets often fail when repeatedly overtopped.
When used as a barrier for area inlets, silt fence fabric and posts must be supported at the top by a wooden frame.
When a silt fence barrier for area inlets is located near an inlet that has steep approach slopes, the storage capacity behind the barrier is drastically reduced. Timely removal of sediment must occur for a barrier to operate properly in this location.

Proper installation method:

Excavate a trench around the perimeter of the area inlet that is at least 8" deep by 8" wide.
Drive posts to a depth of at least 18" around the perimeter of the area inlet.
The distance between posts should be 4' or less. If the distance between two adjacent corner posts is more than 4', add another post(s) between them.
Connect the tops of all the posts with a wooden frame made of 1" by 4" boards. Use nails or screws for fastening.
Attach the wire or polymeric-mesh backing to the outside of the post/frame structure with staples, wire, zip ties, or nails.
Roll out a continuous length of silt fence fabric long enough to wrap around the perimeter of the area inlet. Add more length for overlapping the fabric joint. Place the edge of the fabric in the trench, starting at the outside edge of the trench. Line all three sides of the trench with the fabric. Backfill over the fabric in the trench with the excavated soil and compact. After filling the trench, approximately 24" to 36" of silt fence fabric should remain exposed.
Attach the silt fence to the outside of the post/frame structure with staples, wire, zip ties, or nails. The joint should be overlapped to the next post.

Note: When a silt fence barrier for area inlet is placed in a shallow median ditch, make sure that the top of the barrier is not higher than the paved road. In this configuration, water may spread onto the roadway causing a hazardous condition.

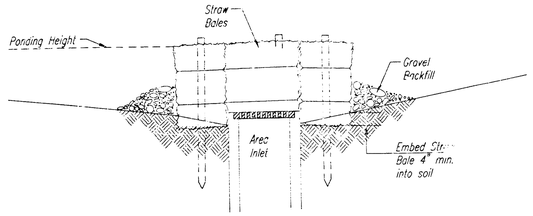
List of common placement/installation mistakes to avoid:

Water should flow through a silt fence barrier for area inlet-not over it. Place a silt fence barrier for area inlet in a location where it is unlikely to be overlopped. Silt fence barrier for area inlets often fail when repeatedly overtopped.
Do not place posts on the outside of the silt fence barrier for area inlet. In this configuration, the force of the water is not resisted by the posts, but only by the staples (wire, zip ties, nails, etc.). The silt fence will rip and fail.
Do not install silt fence barrier for area inlets without framing the top of the posts. The corner posts around area inlets are stressed in two directions whereas a normal silt fence is only stressed in one direction. This added stress requires more support.

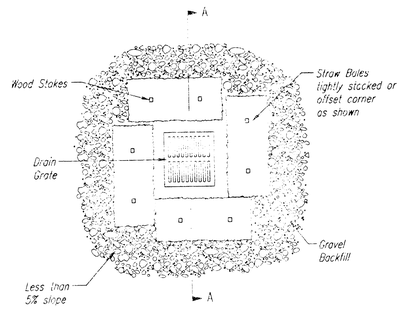
Inspection and Maintenance:

Silt fence barrier for area inlets should be inspected every 7 days and within 24 hours of a rainfall of 1/2" or more. The following is a list of questions that should be addressed during each inspection:

Does water flow under the silt fence?
Does the silt fence sag excessively?
Has the silt fence torn or become detached from the posts?
Does sediment need to be removed from behind the area inlet barrier?



SECTION A-A



STRAW BALE BARRIERS FOR AREA INLETS
(INLET PROTECTION)

Material Specification:

Bale area inlet barriers should be constructed of wheat straw, oat straw, prairie hay, or bromegrass hay that is free of weeds declared noxious by the Kansas State Board of Agriculture.
The stakes used to anchor the bales should be a hardwood material with the following minimum dimensions: 2" square (nominal) by 4' long.

Placement:

Bale area inlet barriers should be placed directly around the perimeter of a drop inlet.
When a bale area inlet barrier is located near an inlet that has steep approach slopes, the storage capacity behind the barrier is drastically reduced. Timely removal of sediment must occur for a barrier to operate properly in this location.

Proper installation Method:

Excavate a trench around the perimeter of the area inlet that is at least 4" deep by a bale's width wide.
Place the bales in the trench, making sure that they are butted tightly. Some bales may need to be shortened to fit into the trench around the area inlet. Two stakes should be driven through each bale, approximately 6" to 8" in from the bale ends.
Stakes should be driven at least 12" into the ground.
Once all the bales have been installed and anchored, place the excavated soil against the receiving side of the barrier and compact it. The compacted soil should be no more than 3" to 4" deep.
Note: When a bale area inlet barrier is placed in a shallow median ditch, make sure that the top of the barrier is not higher than the paved road. In this configuration, water may spread onto the roadway causing a hazardous condition.

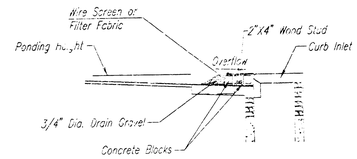
List of common placement installation mistakes to avoid:

Bales should be placed directly against the perimeter of the area inlet. This allows overtopping water to flow directly into the inlet instead of onto nearby soil causing scour.
Bale area inlet barriers must be dug into the ground. Bales at ground level do not work because they allow water to flow under the barrier.

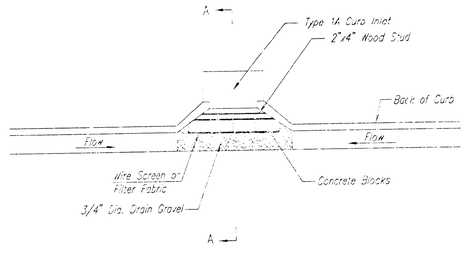
Inspection and Maintenance:

Bale area inlet barriers should be inspected every 7 days and within 24 hours of a rainfall 1/2" or more. The following is a list of questions that should be addressed during each inspection:

Does water flow under the area inlet barrier?
Does water flow through spaces between abutting bales?
Are any bales dislodged?
Are bales decomposing due to age and/or water damage?
Does sediment need to be removed from behind the area inlet barrier?



SECTION A-A



CURB INLET GRAVEL FILTERS
(INLET PROTECTION-RESIDENTIAL STREETS ONLY)

NOTE: Other types of curb inlet protection may be approved so long as equal protection is provided.

A gravel inlet filter shall be installed at sump locations on residential streets.
This type of protection is not to be used on arterial or collector streets at any time that it would pose an undue traffic hazard.

Instructions for installing:

STEP 1: Place concrete blocks around the inlet as shown on drawing. Insert 2x4 board as shown.
STEP 2: Wrap 1/2" mesh wire screen around the concrete blocks.
STEP 3: Place 1" to 1-1/2" diameter rock around the blocks and wire screen. Be sure the rock extends down from the top of the concrete block.
STEP 4: To prevent damage to vehicles, signs warning drivers about the structures may be necessary. An alternative installation is the use of gravel bags supported by a 2"x4" board to prevent collapsing.

Use of rock with diameters smaller than 1" in the bag may result in clogging of pores and reduce the amount of water flowing into an inlet.

Maintenance:

All curb inlet gravel filters shall be inspected and repaired after each runoff event.
Sediment deposits are to be removed once material is within 8 cm (3 inches) of the top of any block. Periodically, the gravel shall be raked to increase infiltration and filtering of runoff waters. Accumulated sediment is to be removed immediately from roads and streets.

CITY OF WICHITA

INLET PROTECTION BMP DETAILS

CHRISTOPHER M. CARRIER, P.E.
STORM WATER ENGINEER

PROJECT NUMBER: 472-8XXXX
C.I.P. NO.: ---

DATE: MAY 2001
SHEET 5 OF 5

DSNR SYS_CNFR_DNR SCALE: 1:1.00
G:\2001\01449\SHT\BMP_DTL_02.DGN 09-28-2001 09:54:16 am