# PRIVATE
# STORMWATER SEWER PLANS FOR
# NORTHEAST ELEMENTARY SCHOOL

**CITY OF WICHITA, KANSAS**

**NEIL CABLE, CITY ENGINEER**

## PROJECT NO. 1283 PPS
## OCA NO. 607861

## GENERAL NOTES

1. UNLESS SHOWN OR STATED OTHERWISE ON THESE DRAWINGS, MATERIALS AND CONSTRUCTION SHALL BE IN ACCORDANCE WITH CITY OF WICHITA STANDARD SPECIFICATIONS.

2. THE CONTRACTOR SHALL BE RESPONSIBLE FOR PRESERVING PROPERTY IRONS. THE CONTRACTOR WILL BE REQUIRED TO RE-ESTABLISH ANY PROPERTY IRONS WHICH ARE DAMAGED OR DESTROYED BY HIS/HER CONSTRUCTION OPERATIONS. SUCH IRONS SHALL BE RE-ESTABLISHED BY A LICENSED LAND SURVEYOR IN ACCORDANCE WITH STATE LAWS.

3. EXISTING UTILITIES AND THEIR LOCATIONS, AS SHOWN ON THE PLANS REPRESENT THE BEST INFORMATION OBTAINABLE FOR DESIGN. LOCATION INFORMATION HAS BEEN OBTAINED FROM THE VARIOUS UTILITY COMPANIES AND IS EITHER FROM COMPANY RECORD DRAWINGS OR COMPANY PROVIDED FIELD LOCATIONS. THE PLAN LOCATIONS SHOWN ARE NOT GUARANTEED. ADDITIONAL EXISTING UTILITIES MAY ALSO BE ENCOUNTERED.

4. CONTRACTOR WILL BE REQUIRED TO PROVIDE A MINIMUM ADVANCE NOTICE OF FORTY-EIGHT (48) HOURS TO UTILITY COMPANIES PRIOR TO STARTING ANY EXCAVATION AS FOLLOWS:

   KANSAS ONE-CALL 1-800-344-7233
   OR 687-2470 (LOCAL WICHITA)

   THE CONTRACTOR MUST NOTIFY THE FOLLOWING IN CASE OF AN EMERGENCY:

| | |
|---|---|
| SOUTHWESTERN BELL TELEPHONE COMPANY | 1-800-734-7590 |
| COX CABLEVISION | 262-0561 |
| KG&E (ELECTRIC) | 383-8600 |
| KANSAS GAS SERVICE | 383-8600 |
| CITY OF WICHITA WATER & SEWER MAINT. | 262-6000 |
| PEOPLES NATURAL GAS | 1-800-303-0357 |

5. RUBBLE FROM THE REMOVAL OF MISCELLANEOUS STRUCTURES AND EXCESS EXCAVATION WHICH IS TO BE WASTED SHALL BE DISPOSED OF ON SITES TO BE PROVIDED BY THE CONTRACTOR. THESE SITES SHALL BE APPROVED BY THE ENGINEER AS TO SUITABILITY, APPEARANCE AND BE APPROVED BY THE ENGINEER AS TO SUITABILITY, APPEARANCE AND SITE LOCATION. LOCATIONS THAT, IN THE OPINION OF THE ENGINEER, WILL LEAVE AN UNSIGHTLY APPEARANCE WILL NOT BE APPROVED. ALL DISPOSAL SITES MUST BE APPROVED BY THE KANSAS DEPARTMENT OF HEALTH AND ENVIRONMENT. MATERIAL EITHER STOCKPILED OR DISPOSED OF IN A FLOOD PLAIN WOULD REQUIRE A KANSAS STATE BOARD OF AGRICULTURE PERMIT. ANY MATERIAL DUMPED IN WATERS OF THE UNITED STATES OR WETLANDS IS SUBJECT TO U.S. CORPS OF ENGINEERS PERMITTING REGULATIONS. ANY MATERIAL BURIED OR STOCKPILED BEYOND APPROVED CONSTRUCTION LIMITS WOULD REQUIRE ADDITIONAL ARCHAEOLOGICAL INVESTIGATIONS UNLESS BURIED IN A PREVIOUSLY APPROVED BORROW LOCATION.

6. THE TOPS OF INLETS AS NOTED ON THE PLANS MAY VARY SO AS TO MEET PROPOSED TOP OF CURB ELEVATIONS OR PAVEMENT ELEVATIONS. THE FIELD ENGINEER SHALL LOCATE INLETS WITH REFERENCE TO PROPOSED PAVING PLANS OF THE PERTINENT IMPROVEMENTS.

APPROVED AS NOTED

BY CITY ENGINEER OF WICHITA

STORM SEWERS VRH 10/21/02

NOTE TO CONTRACTOR

INSPECTION AND TESTING FOR THIS PROJECT IS TO BE PROVIDED BY A LICENSED CONSULTING ENGINEERING FIRM UNDER CONTRACT WITH THE OWNER/DEVELOPER. SAID INSPECTION TO BE IN ACCORDANCE WITH THE CITY OF WICHITA STANDARD CONSTRUCTION ENGINEERING PRACTICES AND CERTIFIED BY A LICENSED PROFESSIONAL ENGINEER. NO WORK SHALL BE PERFORMED IN DEDICATED EASEMENTS OR THE PUBLIC RIGHT-OF-WAY BY THE CONTRACTOR WITHOUT SUCH INSPECTION NOR SHALL ANY WORK BE COMMENCED IN DEDICATED EASEMENTS OR PUBLIC RIGHT-OF-WAY WITHOUT WRITTEN AUTHORIZATION BY THE CITY ENGINEER.

| | NORTHING | EASTING |
|---|---|---|
| CP1 | 1702974.71 | 1669124.04 |
| CP2 | 1703000.15 | 1670399.25 |
| ES1 | 1703148.97 | 1669332.58 |
| MH1 | 1703166.34 | 1669588.96 |
| CI1 | 1703181.41 | 1669812.65 |
| CI2 | 1703378.39 | 1669810.12 |
| CI3 | 1703575.35 | 1669807.59 |
| ES2 | 1704040.86 | 1669171.12 |
| CI4 | 1704045.65 | 1669549.80 |
| CI5 | 1704048.01 | 1669736.32 |
| CI6 | 1704032.16 | 1669906.19 |
| CI7 | 1704000.82 | 1669906.59 |
| DI1 | 1703775.09 | 1669617.92 |
| ES3 | 1703030.72 | 1669156.43 |
| ES4 | 1703039.51 | 1669197.09 |

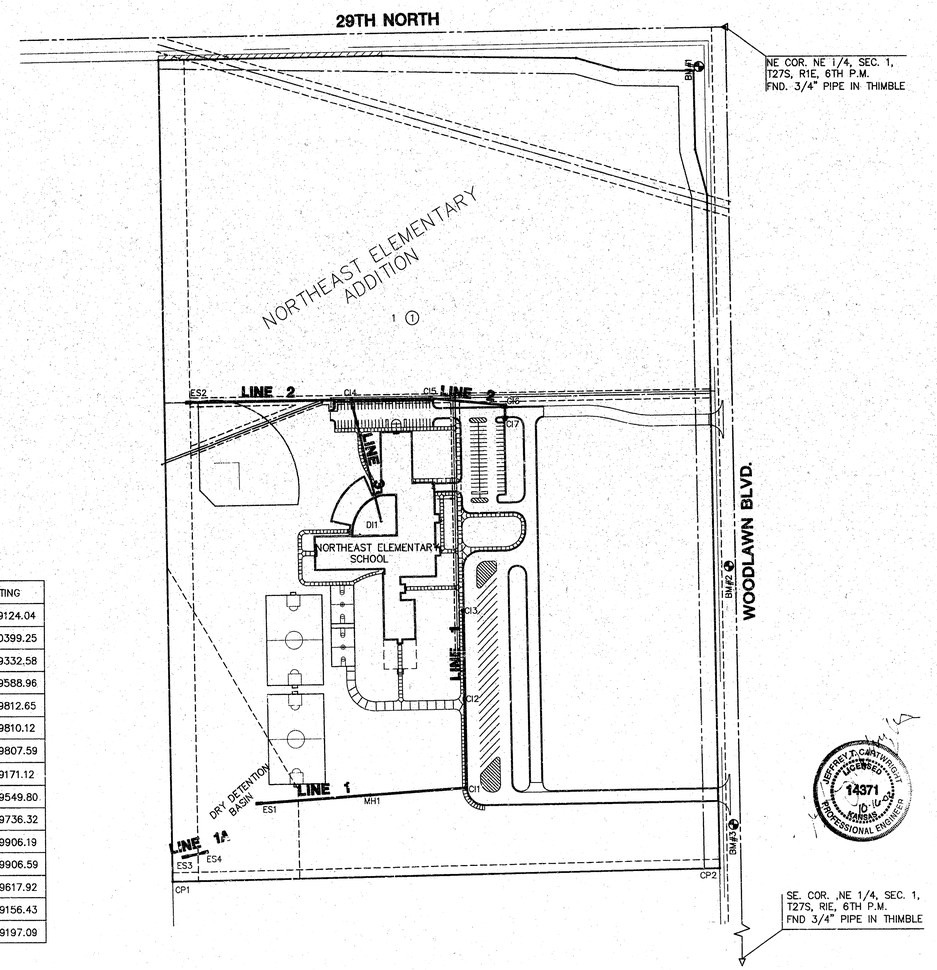


N

SCALE: 1" = 150'

LEGEND

• IRON

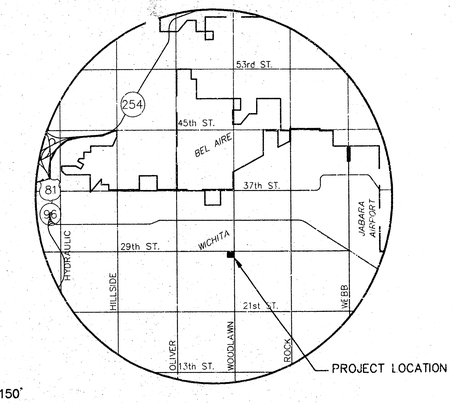


**LOCATION MAP**

## INDEX TO DRAWINGS


| SHEET NO. | DESCRIPTION |
|---|---|
| 1 | TITLE SHEET |
| 2-6 | STORM SEWER PLAN & PROFILE |
| 7-9 | STORM SEWER DETAILS |
| 10 | FINAL PLAT |


## BENCHMARK

BM #1 RR SPIKE IN NE FACE HLP @ SW CORNER 29TH ST. NORTH & WOODLAWN
ELEV.=1364.74

BM #2 RR SPIKE IN W FACE 3RD HLP S OF 29TH W SIDE OF WOODLAWN
ELEV.=1371.25

BM #3 RR SPIKE IN W FACE 5TH HLP S OF 29TH W SIDE OF WOODLAWN
ELEV.=1375.85

JEFFREY T. CARTWRIGHT LICENSED 14371 10-10-02 KANSAS PROFESSIONAL ENGINEER

AS-BUILT: OCTOBER 2004

G:\CIVIL\01160\DWG\SWS\01160DT.DWG

MKEC ENGINEERING CONSULTANTS
411 N. WEBB ROAD
WICHITA, KS. 67206
316 - 684 - 9600

**CITY OF WICHITA**
**NORTHEAST ELEMENTARY SCHOOL**
PROJECT NAME

**TITLE SHEET**
SHEET TITLE

| | | |
|---|---|---|
| JTC | DAC | JTC |
| DESIGN BY: | DRAWN BY: | CHECKED BY: |
| SEPTEMBER 2002 | 01160DT | 1 / 10 |
| DATE | JOB NO. | SHEET/OF |

18 15 01 10

NORTHEAST ELEM. SCHOOL
STORM WATER SEWER PLANS
LINE 1 & 1A

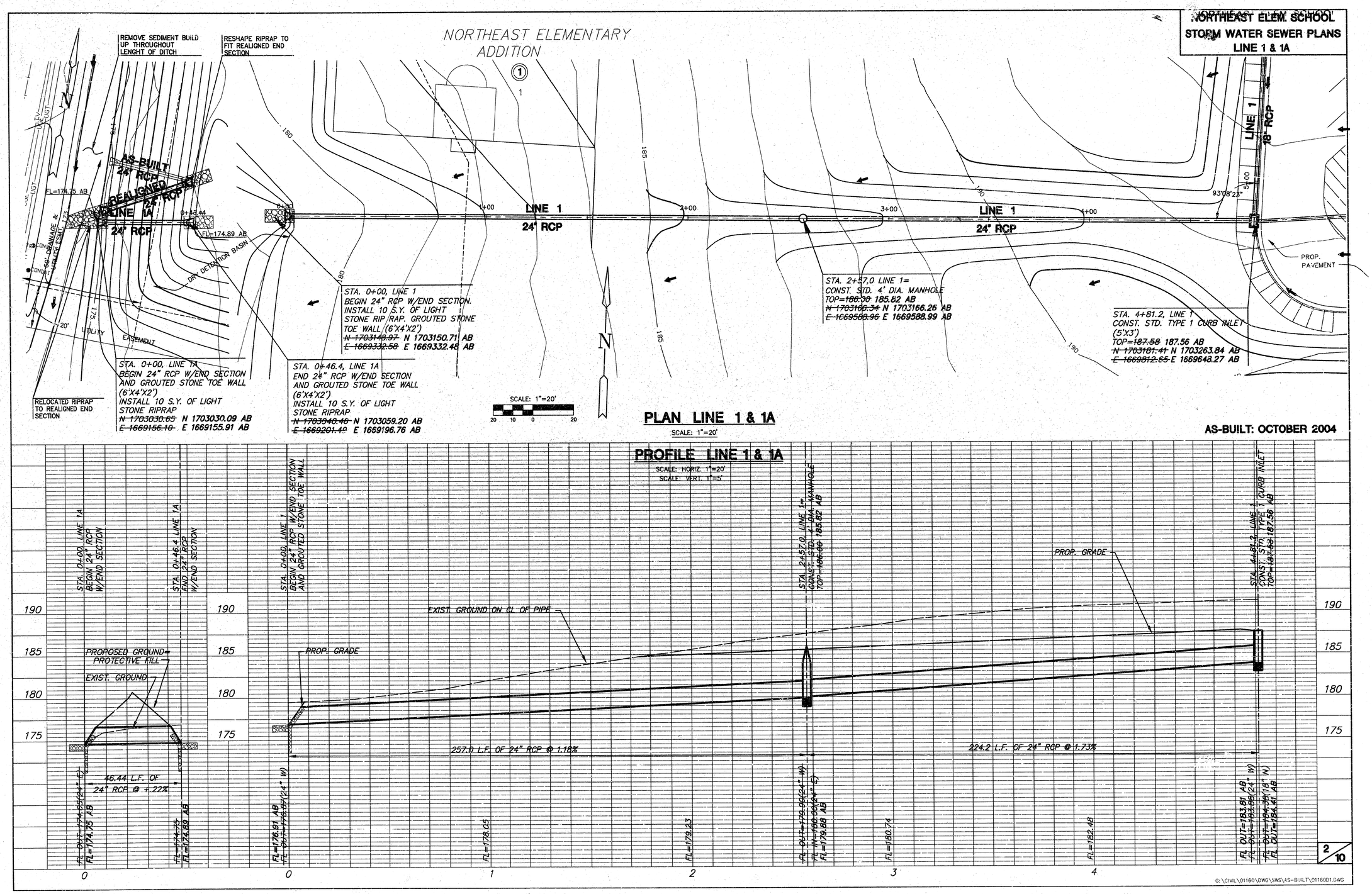




G:\CIVIL\01160\DWG\SWS\AS-BUILT\01160D1.DWG

**NORTHEAST ELEM. SCHOOL**
**STORM WATER SEWER PLANS**
**LINE 1-CONT'D**

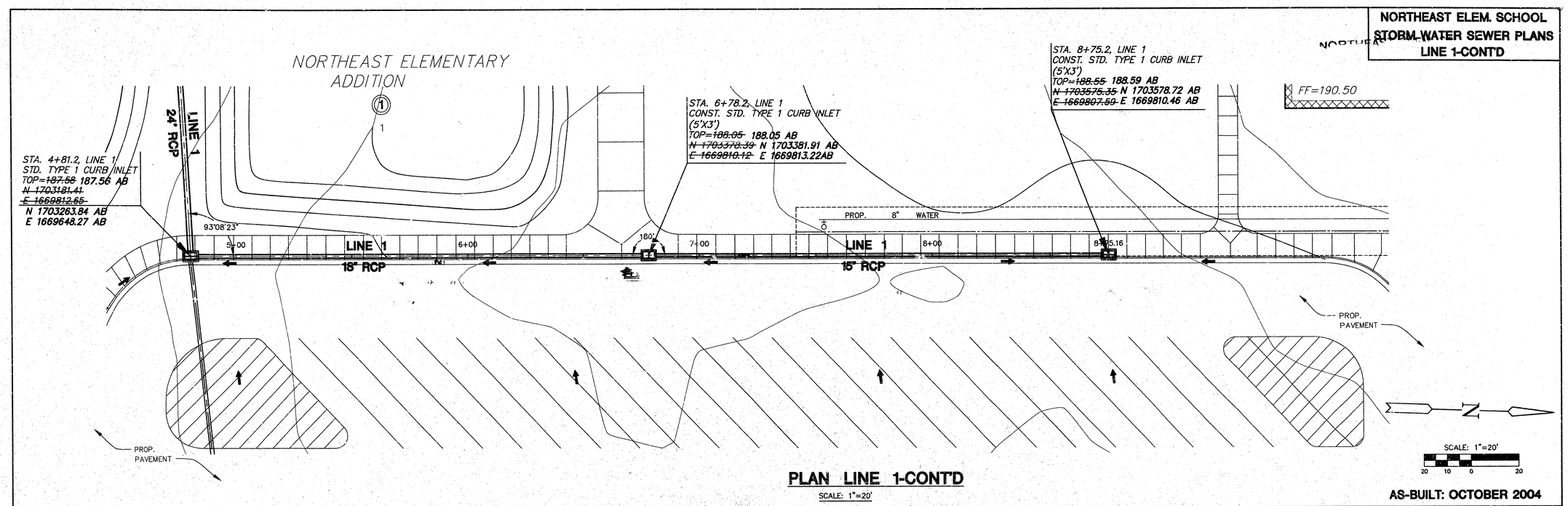


## PLAN LINE 1-CONT'D

SCALE: 1"=20'

**AS-BUILT: OCTOBER 2004**

## PROFILE LINE 1-CONT'D

SCALE: HORIZ. 1"=20'
SCALE: VERT. 1"=5'

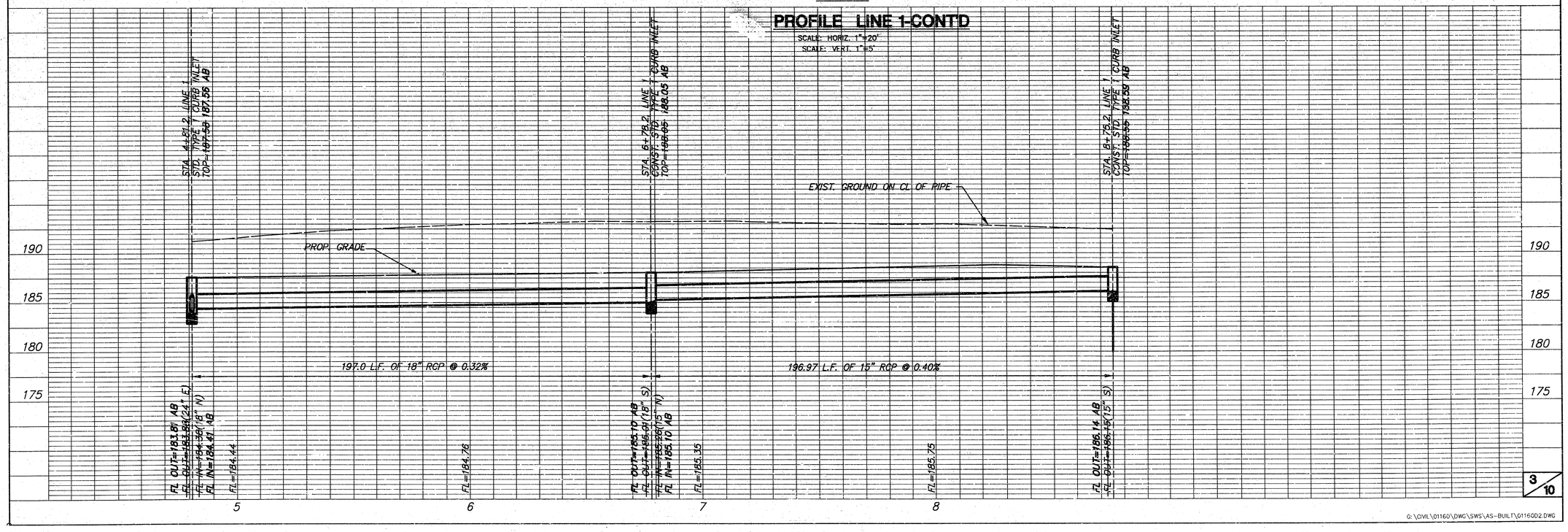




G:\CIVIL\01160\DWG\SWS\AS-BUILT\0116GD2.DWG

**NORTHEAST ELEM. SCHOOL**
**STORM WATER SEWER PLANS**
**LINE 2**

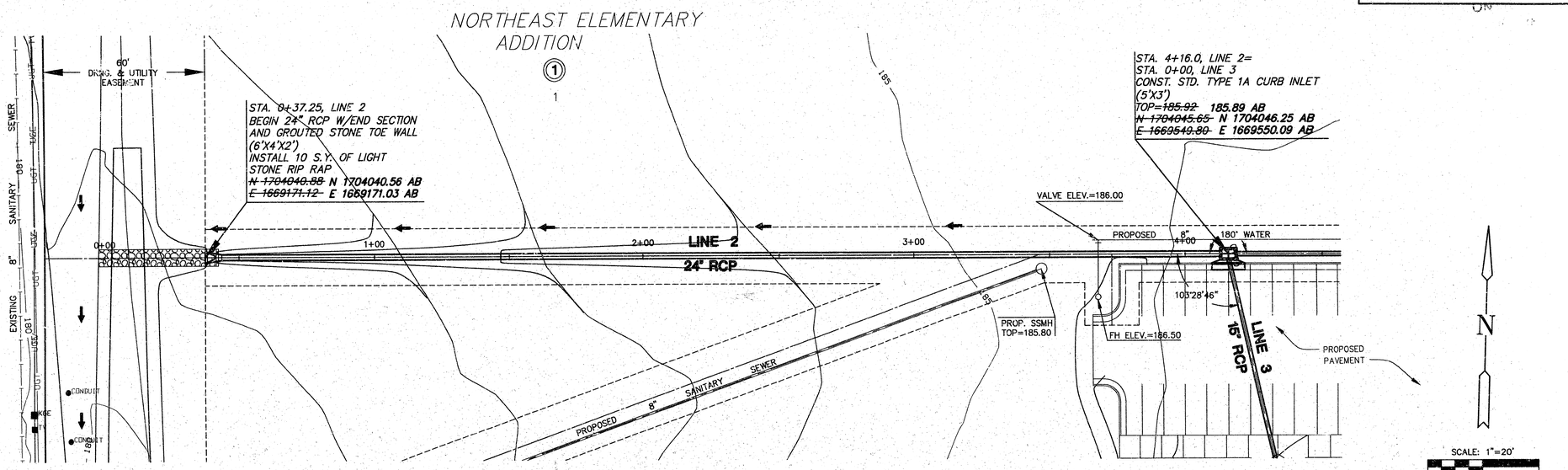


## PLAN LINE 2

SCALE: 1"=20'

SCALE: 1"=20'
20 10 0 20

**AS-BUILT: OCTOBER 2004**

## PROFILE LINE 2

SCALE: HORIZ. 1"=20'
SCALE: VERT. 1"=5'

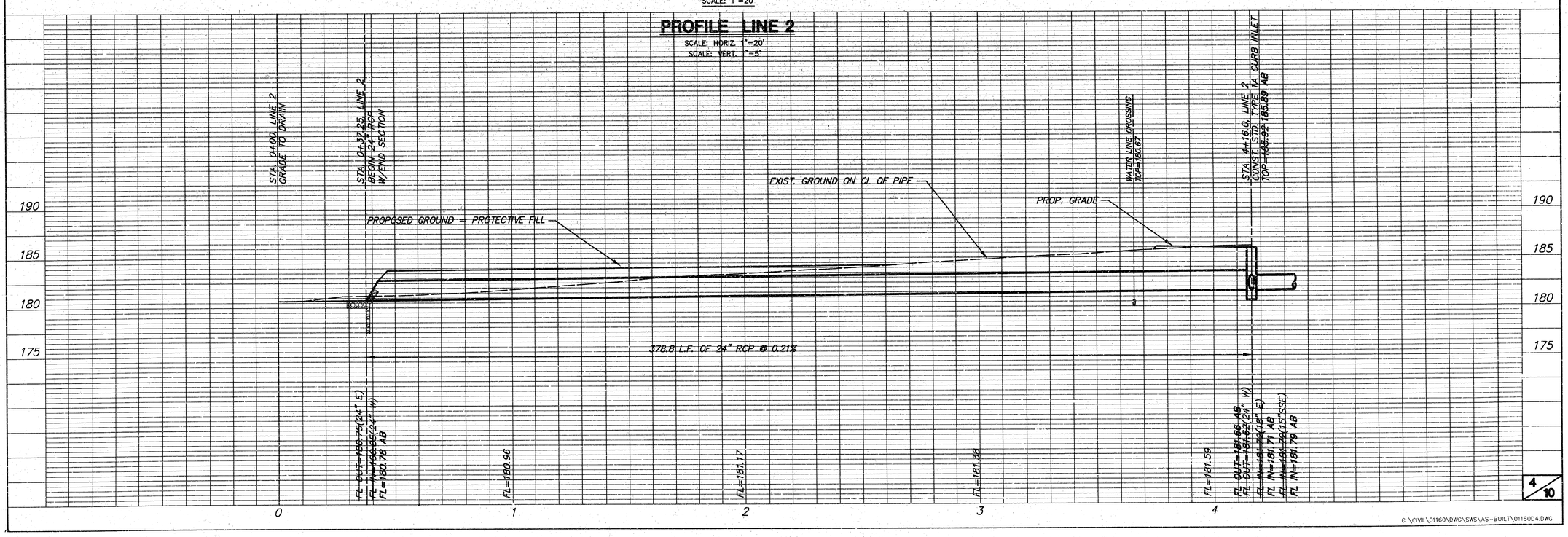




C:\CIVIL\01160\DWG\SWS\AS-BUILT\01160D4.DWG

**NORTHEAST ELEM. SCHOOL**
**STORM WATER SEWER PLANS**
**LINE 2 - CONT'D**

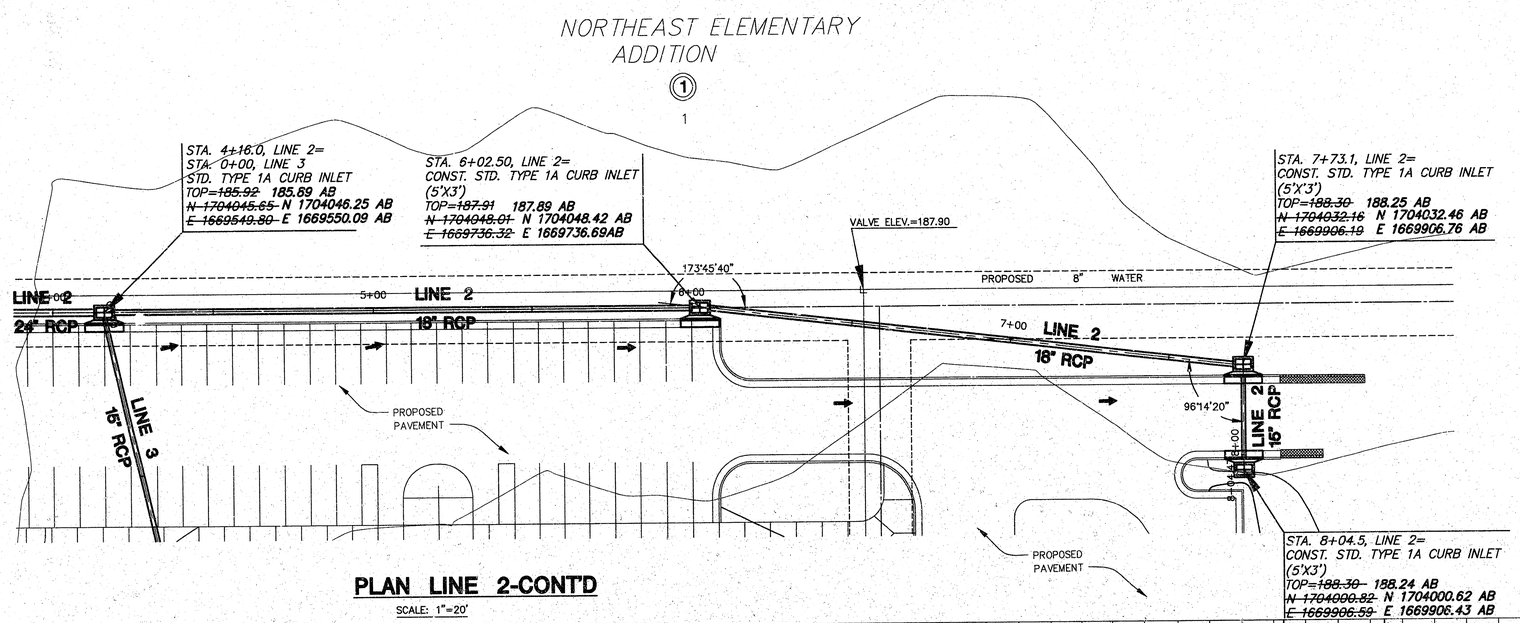


## PLAN LINE 2-CONT'D

SCALE: 1"=20'

N

SCALE: 1"=20'

20 10 0 20

**AS-BUILT: OCTOBER 2004**

## PROFILE LINE 2-CONT'D

SCALE: HORIZ. 1"=20'
SCALE: VERT. 1"=5'

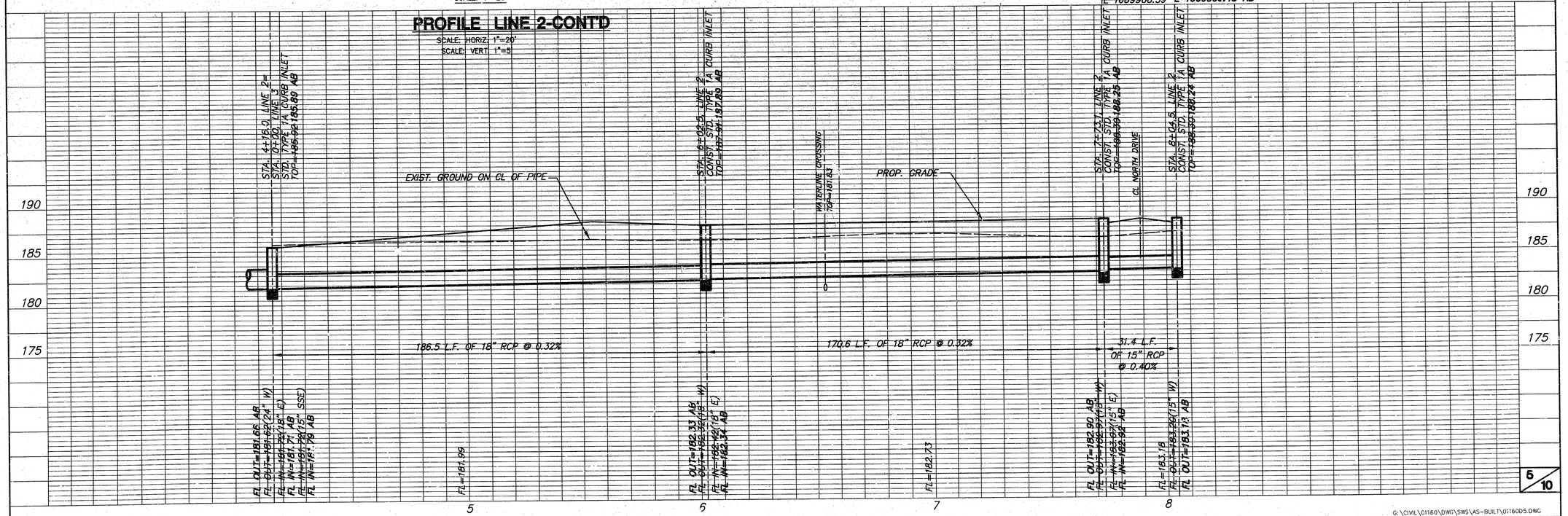




G:\CIVIL\01160\DWG\SWS\AS-BUILT\01160D5.DWG

**NORTHEAST ELEM. SCHOOL**
**STORM WATER SEWER PLANS**
**LINE 3**

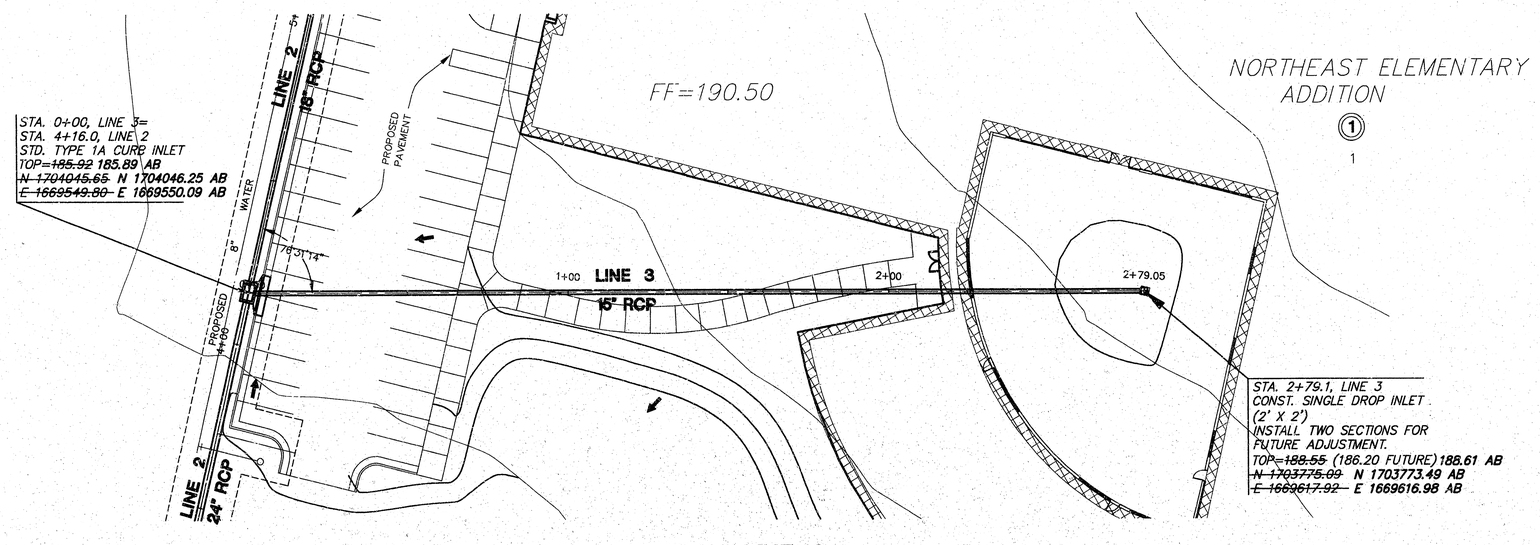


## PLAN LINE 3

SCALE: 1"=20'

SCALE: 1"=20'
20 10 0 20

**AS-BUILT: OCTOBER 2004**

## PROFILE LINE 3

SCALE: HORIZ. 1"=20'
SCALE: VERT. 1"=5'

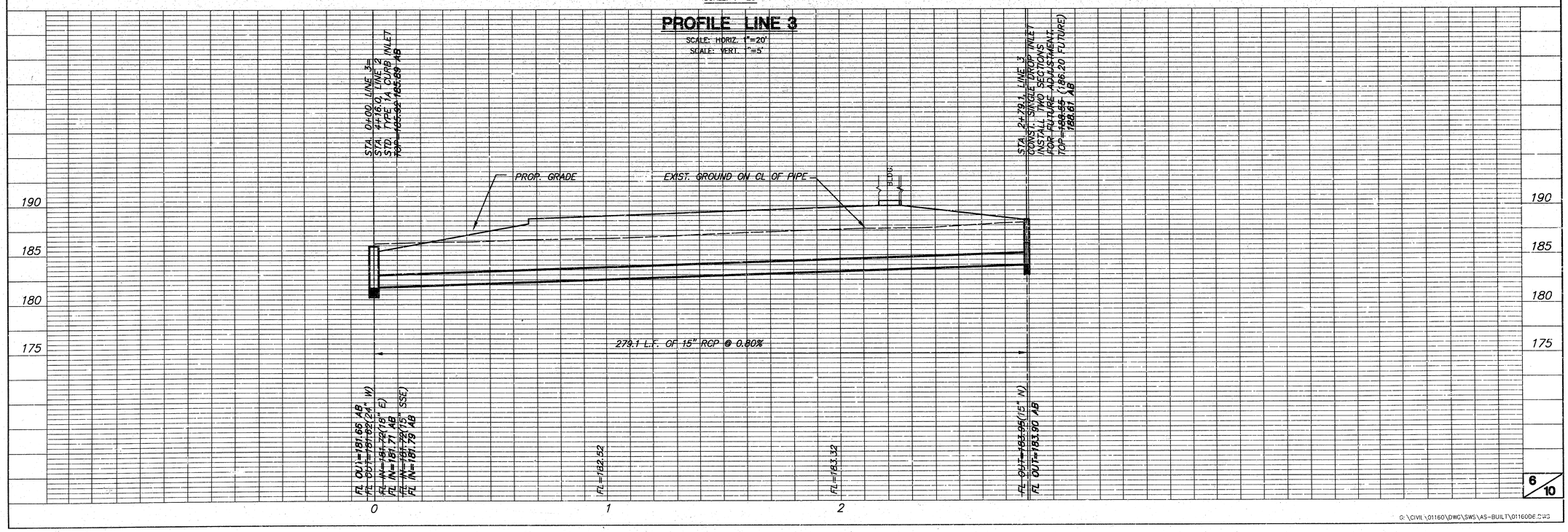




G:\CIVIL\01160\DWG\SWS\AS-BUILT\011600E.DWG

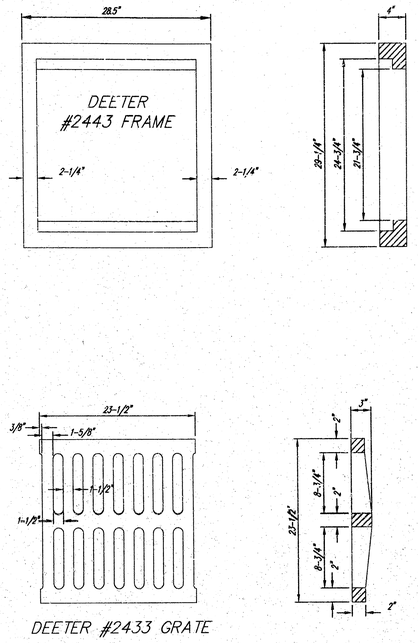


DEETER #2433 GRATE

24" x 24" Frame and Grate Detail

NOTE: Grates shall be imprinted on the top surface with "CITY OF WICHITA" using letters at least 1" in height. Other marking methods may be approved by the engineer.

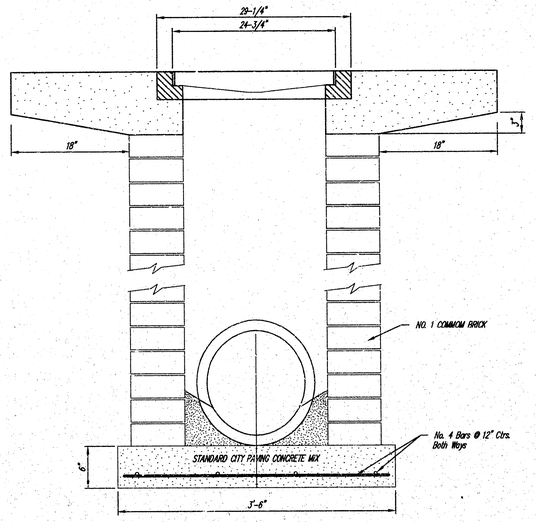


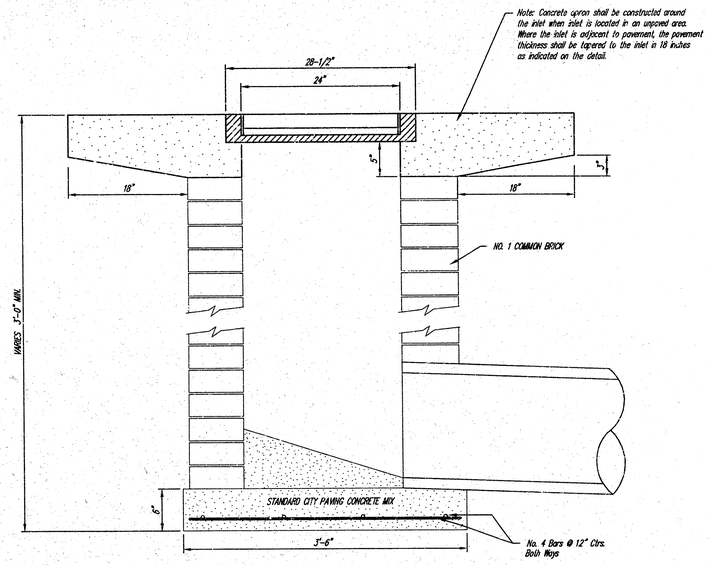


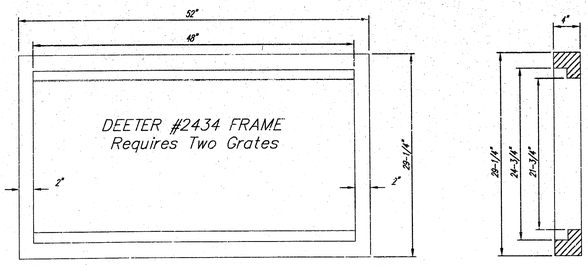


Double 24" x 24" Frame Detail

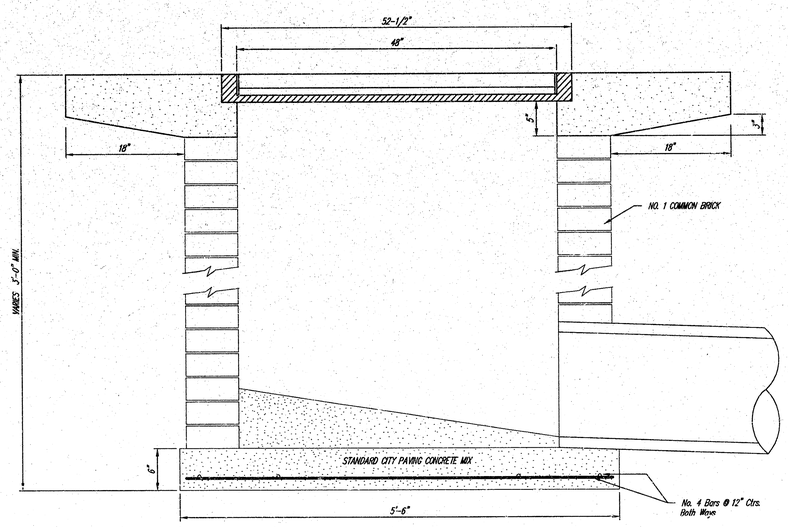


THE CITY OF WICHITA

CITY ENGINEER'S OFFICE
CITY HALL – SEVENTH FLOOR
455 NORTH MAIN STREET
WICHITA, KANSAS 67202
(316) 268-4501
(316) 268-4114 FAX

**DROP INLET**
**2' X 2'/2' X 4'**

M. E. LINDEBAK P.E. – CITY ENGINEER

| PROJECT NUMBER | INDEX CODE |
|---|---|
| 1283 PPS | 607861 |
| DATE MAR 96 | SHEET 7 OF 10 |

G:\CIVIL\01160\DWG\SHG\0116DD1.DWG

Notes:

1. Inlet Top Reinforcing shall be Spaced on 6" Max. Centers. Inlet Lids shall be Notched out as Indicated to Facilitate Construction of Curb.
2. $b_2$ Bar to be Field Bent to Clear Inlet Frame.

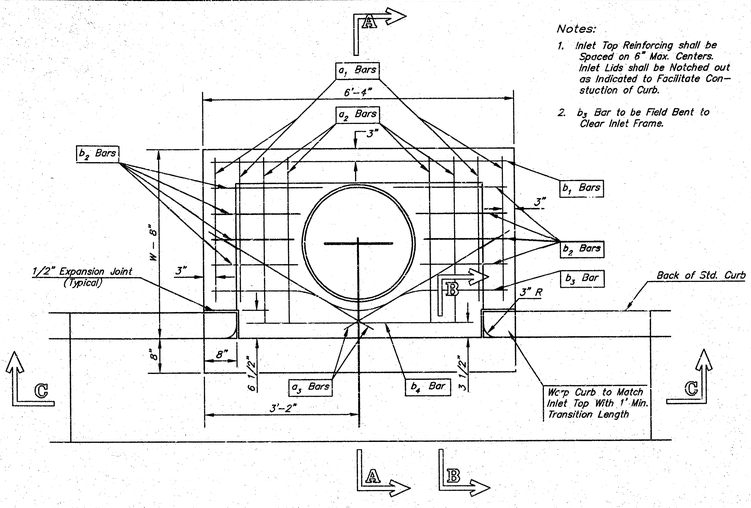


PLAN

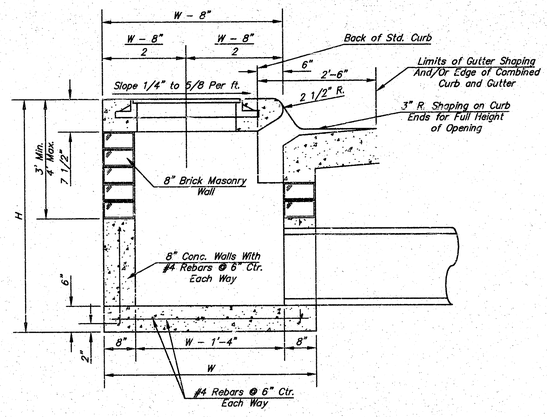


SECTION A–A

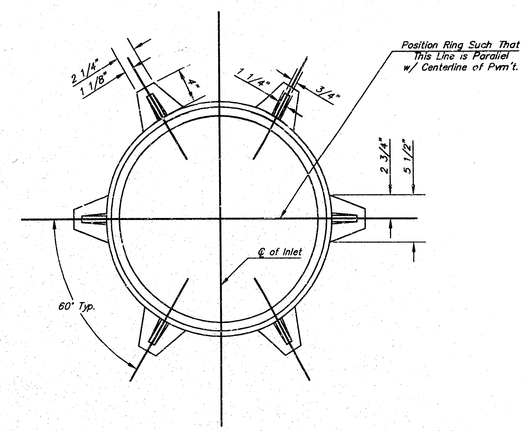


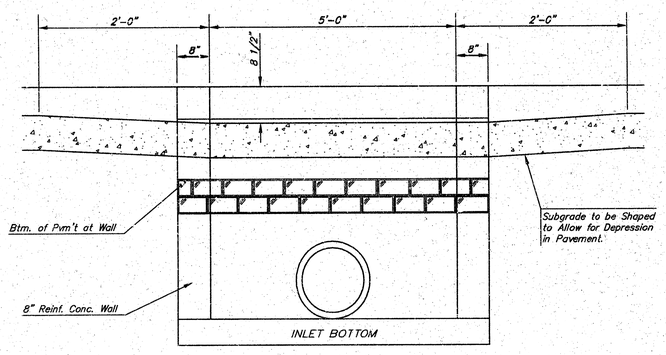


SECTION C–C

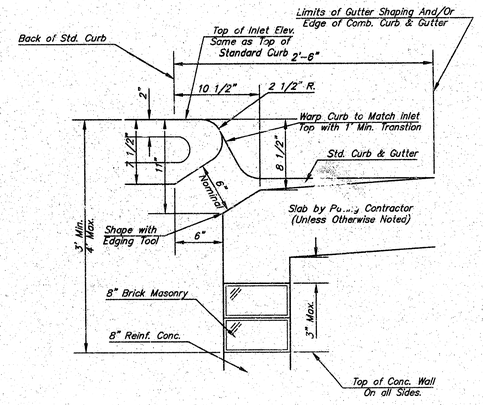


SECTION B–B

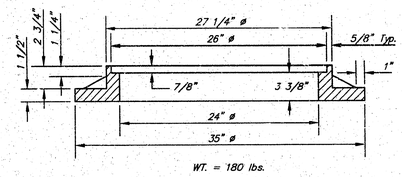


MANHOLE RING AND COVER

*See City of Wichita Standard Manhole Ring and Cover Detail Sheet for Cover Details to Be Used With Inlet Frame.

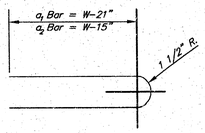


BENDING DIAGRAM

STEEL SCHEDULE

| BAR | | $a_1$ | $a_2$ | $a_3$ | $b_1$ W=4'-4" | $b_1$ W=5'-4" | $b_1$ W=6'-4" | $b_1$ W=7'-4" | $b_1$ W=8'-4" | $b_2$ | $b_3$ | $b_4$ | Wt. Lbs. |
|---|---|---|---|---|---|---|---|---|---|---|---|---|---|
| NUMBER | | 4 | 4 | 2 | 1 | 3 | 5 | 7 | 9 | 6 | 1 | 1 | |
| SIZE | | #4 | #4 | #4 | #4 | #4 | #4 | #4 | #4 | #4 | #4 | #6 | |
| LENGTH | W=4'-4" | 5'-7" | 6'-7" | 4'-0" | 6'-1" | – | – | – | – | 1'-9" | 6'-2" | 4'-8" | 60± |
| | W=5'-4" | 7'-7" | 8'-7" | 5'-0" | – | 6'-1" | – | – | – | 1'-9" | 6'-2" | 4'-8" | 81± |
| | W=6'-4" | 9'-7" | 10'-7" | 6'-0" | – | – | 6'-1" | – | – | 1'-9" | 6'-2" | 4'-8" | 101± |
| | W=7'-4" | 11'-7" | 12'-7" | 7'-0" | – | – | – | 6'-1" | – | 1'-9" | 6'-2" | 4'-8" | 121± |
| | W=8'-4" | 13'-7" | 14'-7" | 8'-0" | – | – | – | – | 6'-1" | 1'-9" | 6'-2" | 4'-8" | 141± |

Note: $a_3$ Bars io be Placed Approx. 2" Below Top of Inlet Cover.

STANDARD CURB INLET PRECAST TOPS

| W | PRE-CAST TOP SIZE | | PIPE SIZE | CU. YD. CONC. |
|---|---|---|---|---|
| 4'-4" | 3'-8" | 6'-4" 7 1/2" | 21" & SMALLER | 0.38± |
| 5'-4" | 4'-8" | 6'-4" 7 1/2" | 24" & 30" | 0.51± |
| 6'-4" | 5'-8" | 6'-4" 7 1/2" | 36" & 42" | 0.64± |
| 7'-4" | 6'-8" | 6'-4" 7 1/2" | 48" & 54" | 0.77± |
| 8'-4" | 7'-8" | 6'-4" 7 1/2" | 60" & 66" | 0.90± |

GENERAL NOTES

1. Concrete tops to be installed on thin mortar cushion to insure full support along brick walls. Concrete tops may be cast in place or precast. Concrete used for inlet construction shall be concrete pavement mix.
2. Contractor shall have the option of constructing 8" brick masonry walls between the concrete inlet base and top on this inlet when W=6'-4" and H=7'-0" or less.
3. Inlet invert shall be shaped with 8 sack sand mix concrete to create flow channels and to increase hydraulic efficiency such that the inlet will be self cleaning between all inlet and/or outlet pipes.
4. The ends of all pipes installed in inlets shall be cut off flush with the inside face of the inlet wall.


THE CITY OF WICHITA

CITY ENGINEER'S OFFICE
CITY HALL – SEVENTH FLOOR
455 NORTH MAIN STREET
WICHITA, KANSAS 67202
(316) 268-4501
(316) 268-4114 FAX


**STANDARD TYPE 1 CURB INLET**

**OPENING = 6" x 5'-0"**

M. E. LINDEBAK P.E. – CITY ENGINEER

| PROJECT NUMBER | INDEX CODE |
|---|---|
| 1283 PPS | 607861 |
| DATE MAR 96 | SHEET 8 OF 10 |

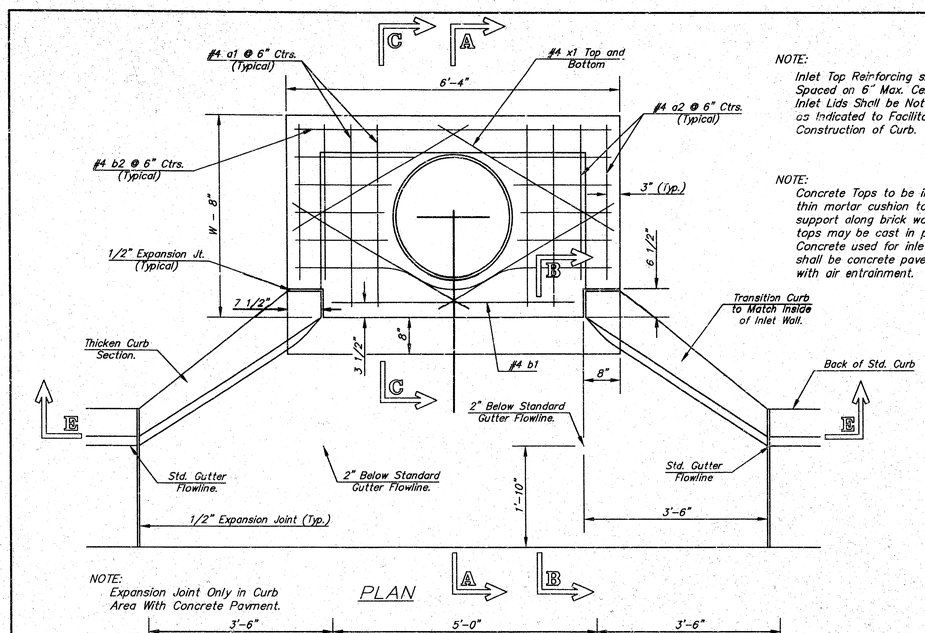


NOTE:
Expansion Joint Only in Curb Area With Concrete Pavment.

PLAN

NOTE:
Inlet Top Reinforcing shall be Spaced on 6" Max. Centers. Inlet Lids Shall be Notched Out as Indicated to Facilitate Construction of Curb.

NOTE:
Concrete Tops to be installed on thin mortar cushion to insure full support along brick walls. Concrete tops may be cast in place or precast. Concrete used for inlet construction shall be concrete pavement mix with air entrainment.

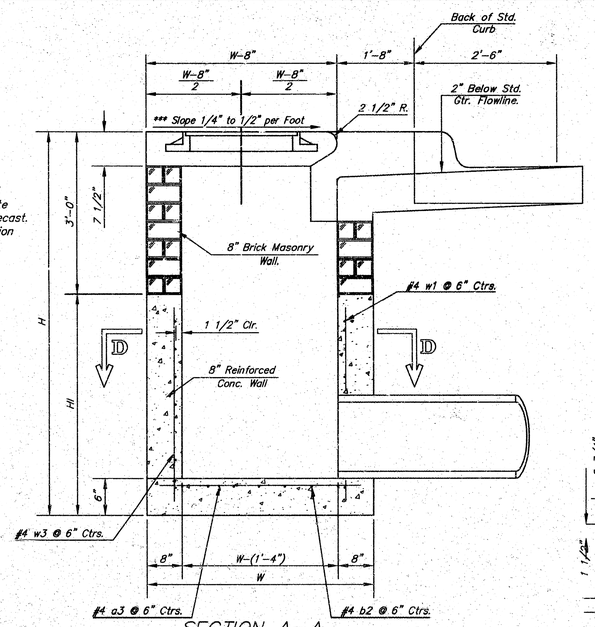


SECTION A-A

***NOTE: Slope of inlet tops to Match Sidewalk or Parking Slopes within Limits Indicated.

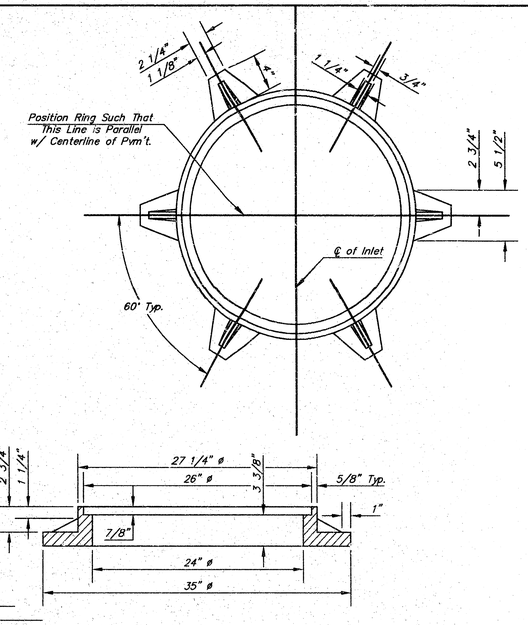


MANHOLE RING AND COVER

Weight = 180 Lbs.

*See City of Wichita Standard Manhole Ring and Cover Detail Sheet for Cover Details to Be Used With Inlet Frame.

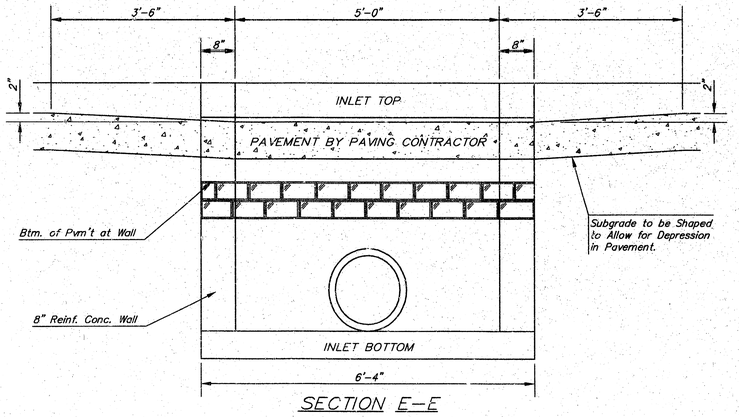


SECTION E-E

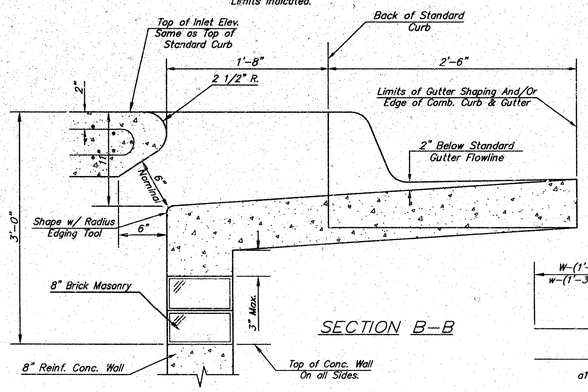


SECTION B-B

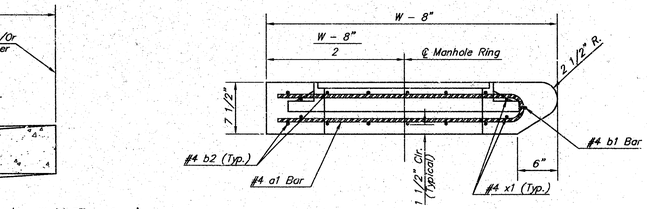


SECTION A-A

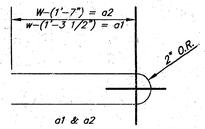


BENDING DIAGRAM

| STANDARD CURB INLET PRECAST TOPS | | | |
|---|---|---|---|
| W | PRE-CAST TOP SIZE | PIPE SIZE | CU. YD. CONC. |
| 4'-4" | 3'-8" x 6'-4" x 7 1/2" | 21" & SMALLER | 0.38± |
| 5'-4" | 4'-8" x 6'-4" x 7 1/2" | 24" & 30" | 0.51± |
| 6'-4" | 5'-8" x 6'-4" x 7 1/2" | 36" & 42" | 0.64± |
| 7'-4" | 6'-8" x 6'-4" x 7 1/2" | 48" & 54" | 0.77± |
| 8'-4" | 7'-8" x 6'-4" x 7 1/2" | 60" & 66" | 0.90± |

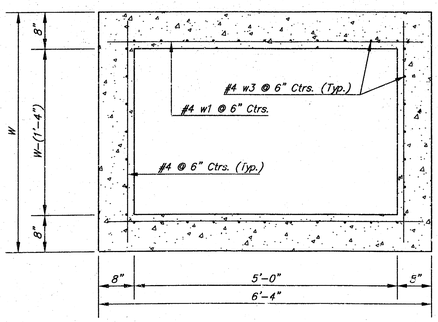


SECTION D-D

NOTE: Contractor shall have the option of constructing 8" brick masonry walls between the concrete inlet base and top on this inlet when W=6'-4" and H=7'-0" or less.

Additional curb and gutter construction necessary to connect set-back inlet to pavement will be paid for at the unit price bid for each inlet hookup.

Inlet invert shall be shaped with 8 sack sand mix concrete to create flow channels and to increase hydraulic efficiency such that the inlet will be self-cleaning between all inlet and/or outlet pipes.

The ends of all pipes installed in inlets shall be cut off flush with the inside face of the inlet wall

| PRECAST SLAB AND FLOOR REINFORCING | | | | | | | | | | | |
|---|---|---|---|---|---|---|---|---|---|---|---|
| | | W = 4'-4" | | W = 5'-4" | | W = 6'-4" | | W = 7'-4" | | W = 8'-4" | |
| MARK | SIZE | NO. | LENGTH | NO. | LENGTH | NO. | LENGTH | NO. | LENGTH | NO. | LENGTH |
| * a1 | #4 | 6 | 6'-7" | 6 | 8'-7" | 6 | 10'-7" | 6 | 12'-7" | 6 | 14'-7" |
| a2 | #4 | 4 | 6'-0" | 4 | 8'-0" | 4 | 10'-0" | 4 | 12'-0" | 4 | 14'-0" |
| a3 | #4 | 13 | 4'-1" | 13 | 5'-1" | 13 | 6'-1" | 13 | 7'-1 | 13 | 8'-1" |
| b1 | #4 | 1 | 4'-9" | 1 | 4'-9" | 1 | 4'-9" | 1 | 4'-9" | 1 | 4'-9" |
| * b2 | #4 | 23 | 6'-1" | 29 | 6'-1" | 35 | 6'-1" | 41 | 6'-1" | 47 | 6'-1" |
| x1 | #4 | 8 | 3'-10" | 8 | 4'-2" | 8 | 4'-6" | 8 | 4'-10" | 8 | 5'-2" |
| WALL REINFORCING | | | | | | | | | | | |
| | | W = 4'-4" | | W = 5'-4" | | W = 6'-4" | | W = 7'-4" | | W = 8'-4" | |
| MARK | SIZE | NO. | LENGTH | NO. | LENGTH | NO. | LENGTH | NO. | LENGTH | NO. | LENGTH |
| w1 | #4 | ① | 6'-1" | ① | 6'-1" | ① | 6'-1" | ① | 6'-1" | ① | 6'-1" |
| w2 | #4 | ① | 4'-1" | ① | 5'-1" | ① | 6'-1" | ① | 7'-1" | ① | 8'-1" |
| w3 | #4 | 32 | ② | 36 | ② | 40 | ② | 44 | ② | 48 | ② |

* Field Bend or Cut Reinforcing as Required for Clearance.

① 4 (HI - 12") (HI - 21") Rounded down to nearest 0.5'

② HI - 3"

THE CITY OF WICHITA

CITY ENGINEER'S OFFICE
CITY HALL — SEVENTH FLOOR
455 NORTH MAIN STREET
WICHITA, KANSAS 67202
(316) 268-4501
(316) 268-4114 FAX

**STANDARD TYPE 1-A CURB INLET**

**OPENING = 6" x 5'-0"**

M. E. LINDEBAK P.E. – CITY ENGINEER

| PROJECT NUMBER | INDEX CODE |
|---|---|
| 1283 PPS | 607861 |
| DATE MAR 96 | SHEET 9 OF 10 |

H:\CIVIL\01160\DwgSWS\01160DD4

FINAL PLAT

# NORTHEAST ELEMENTARY SCHOOL ADDITION

AN ADDITION TO WICHITA, SEDGWICK COUNTY, KANSAS

**ACCESS CONTROL NOTE:**

Woodlawn Boulavard – Four access points to Woodlawn are allowed. The minimum distance between full turning movement drives shall be 400'. The minimum distance between a right–in/right–out drive and either another right–in/right–out drive or a full turning movement drive shall be 200'. The northern most full turning movement drive shall align with Pepperwood Road on the east side of Woodlawn as indicated on the face of plat.

29th Street North – Three access points to 29th are allowed. The minimum distance between full turning movement drives shall be 400'. The minimum distance between a right–in/right–out drive and either another right–in/right–out drive or a full turning movement drive shall be 200'. The first opening with full turning movements shall be a minimum distance of 400' from Woodlawn. The second opening from Woodlawn shall align with the existing drive on the north side of 29th Street as indicated on the face of plat.

SCALE: 1" = 100'

100 0 100 200

## LEGEND

- △ = SECTION CORNER MONUMENT FOUND
- ◉ = FOUND PROPERTY CORNER REBAR
- ● = SET 5/8" REBAR W/ MKEC CLS #39 CAP
- (M) = MEASURED DIMENSION
- ▨ = 10' STREET DEDICATION

| MINIMUM PAD ELEVATIONS (LOWEST OPENINGS) | | | |
|---|---|---|---|
| LOT | BLOCK | ELEVATION (CITY DATUM) | ELEVATION (USGS) |
| 1 | 1 | 183.5 | 1370.9 |

## BENCHMARKS

BM#1 – RR spike in NE face PP at the SW Corner for 29th Street and Woodlawn. Elev.= 177.34 (City Datum) 1364.74 (NGVD)

BM#2 – RR Spike in W face of 5th PP S of 29th Street, W side of Woodlawn. Elev.= 188.45 (City Datum) 1375.85 (NGVD)
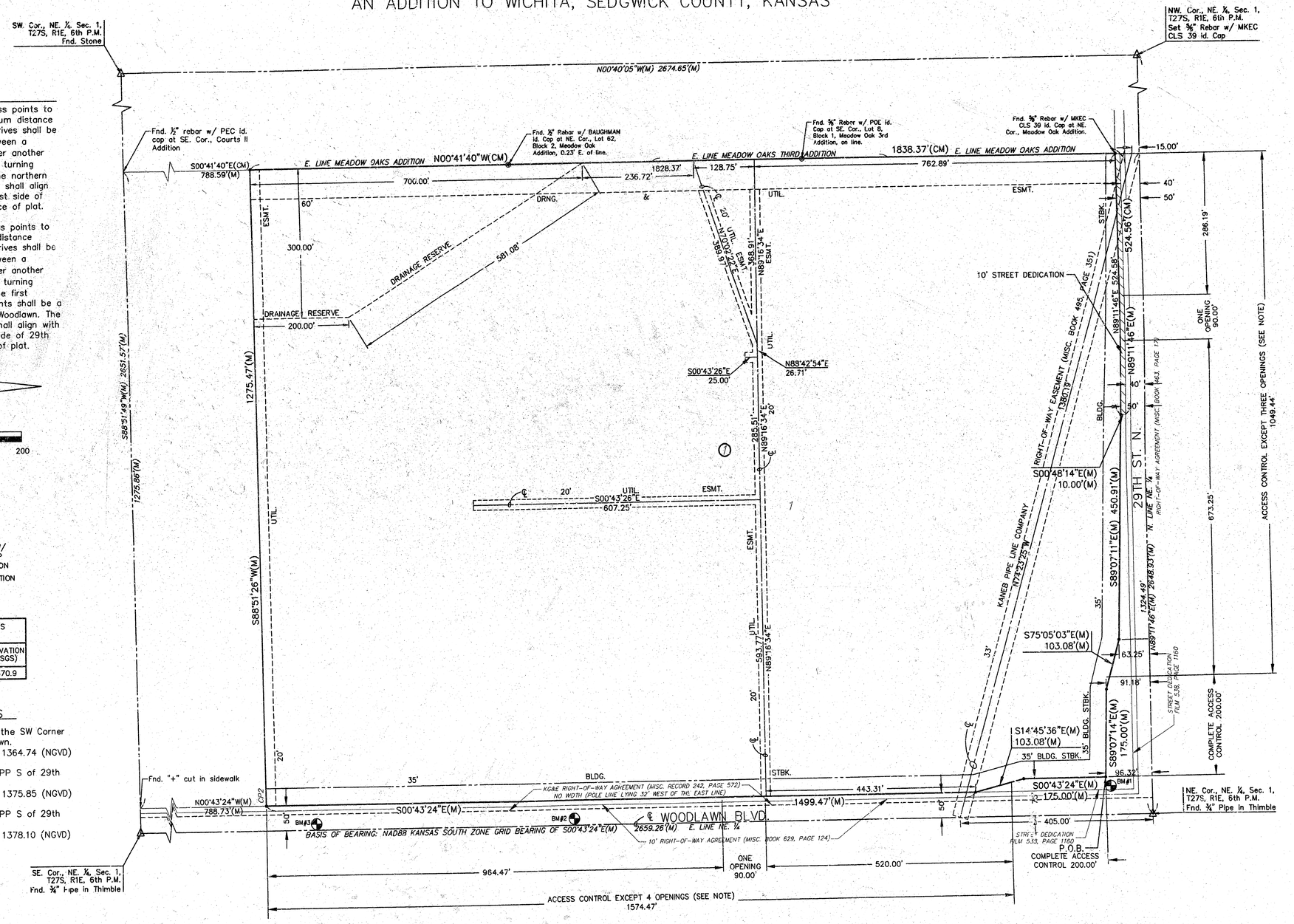
BM#3 – RR Spike in W face of 7th PP S of 29th Street, W side of Woodlawn. Elev.= 190.70 (City Datum) 1378.10 (NGVD)