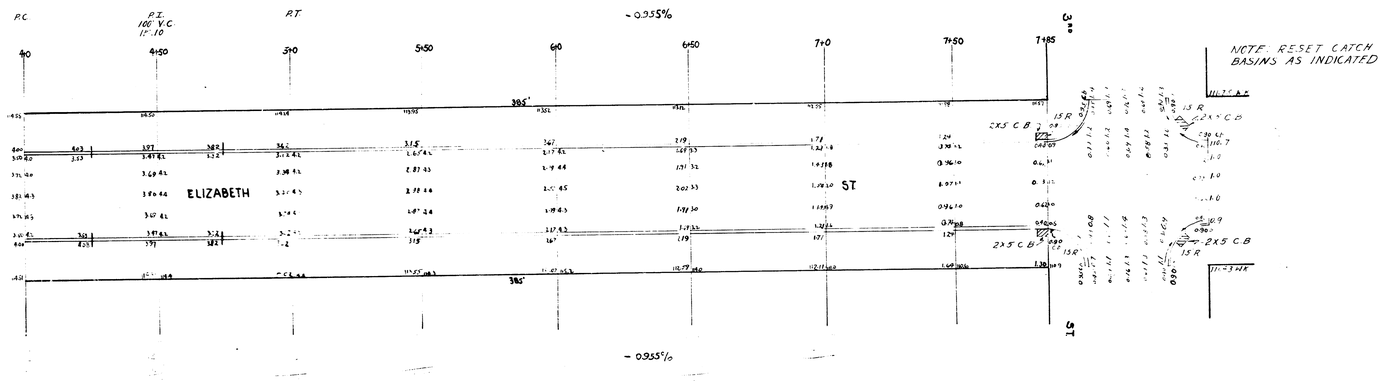
N
P.C.
P.I.
100 V.C.
P.T.
-0.955%
4+0
4+50
5+0
5+50
6+0
6+50
7+0
7+50
7+85
ELIZABETH
ST
2X5 C.B.
15 R
NOTE: RESET CATCH BASINS AS INDICATED
-0.955%

2/2

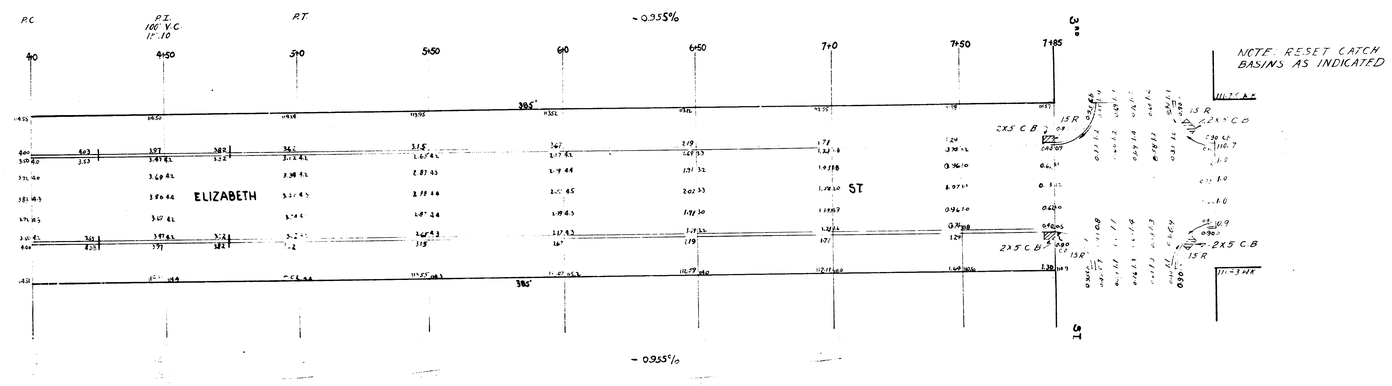
N
P.C.
P.I.
100' V.C.
P.T.
-0.955%
4+0
4+50
5+0
5+50
6+0
6+50
7+0
7+50
7+85
NOTE: RESET CATCH BASINS AS INDICATED
385'
ELIZABETH
ST
2X5 C.B.
15 R
-0.955%

2/2