INDEX OF SHEETS

1. Title Sheet
2. Construction Layout
3. General Notes and Summary of Bridge Quantities
4. Abutment Details
5. Pier Details
6. Roadway Beam Details
7. Sidewalk Beam Details
8. Superstructure Layout
9. Superstructure Details
10. Handrail Details
11. Riprap and Approach Slab Details
12. Bar List and Bending Diagrams
13. Standard Pile Details
14. Bridge Excavation
15. Supports and Spacers for Reinforcing Steel

15A-15C CENTRAL AVE PAVING PLAN SHEETS (Right-of-Way Information Only)

CITY OF WICHITA, KANSAS

BRIDGE WIDENING

(WEST CENTRAL AVENUE)

MIKE LINDEBAK / CITY ENGINEER

PROJ. NO. 472-76-245-81502-000-000-001

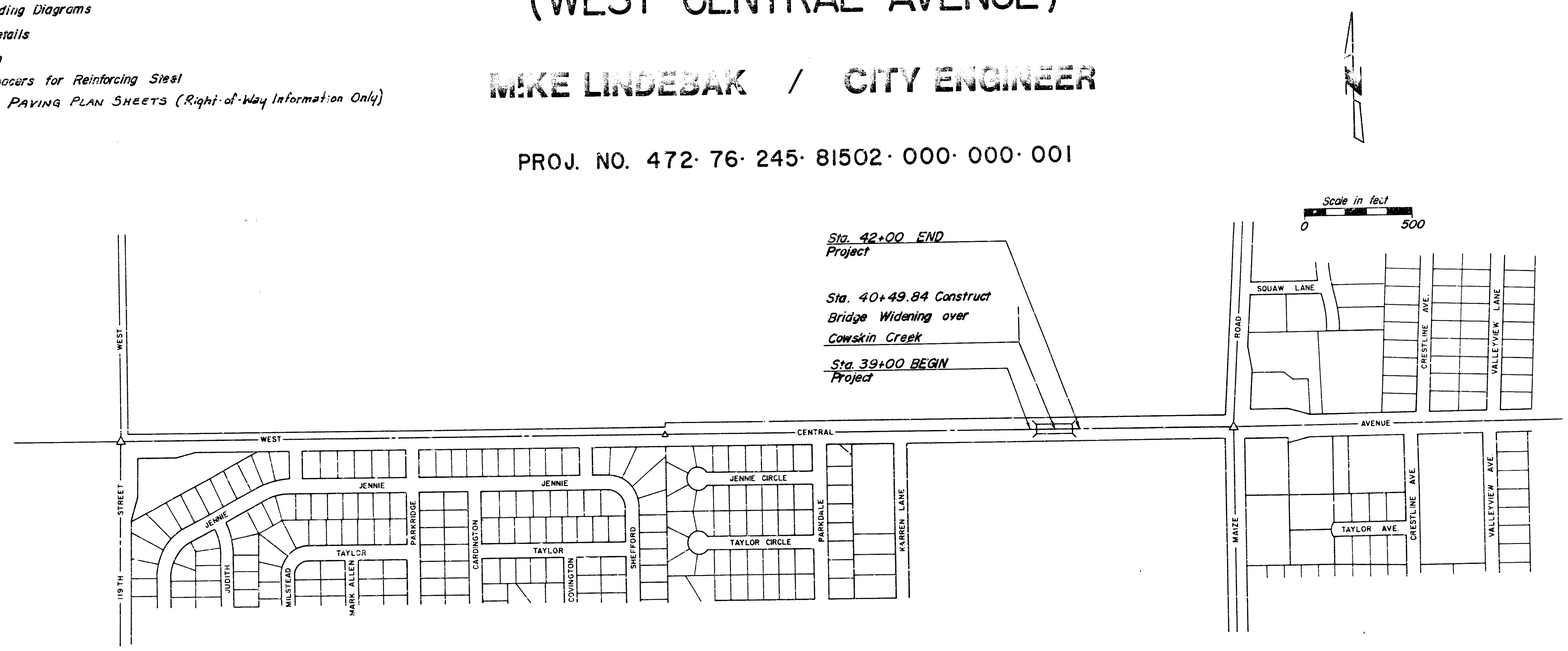

PLANS PREPARED BY

Engineers Architects Planners

WICHITA, KANSAS

WILMER FREUND LICENSED 4529 KANSAS PROFESSIONAL ENGINEER

NOTE: Traffic will not be carried through construction.

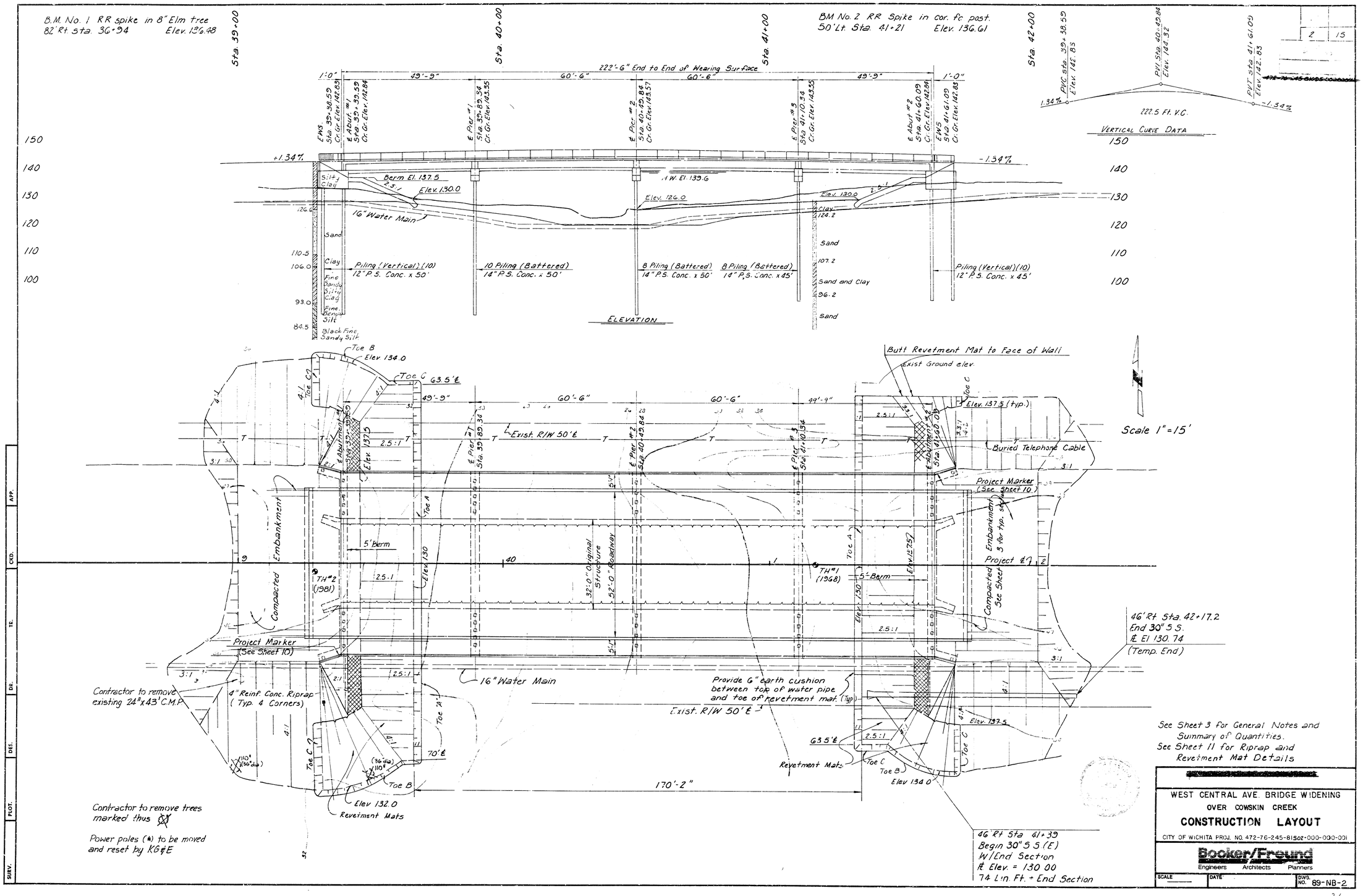

See Sheet 3 for General Notes and Summary of Quantities.
See Sheet 11 for Riprap and Revetment Mat Details

[redacted]

WEST CENTRAL AVE. BRIDGE WIDENING
OVER COWSKIN CREEK
CONSTRUCTION LAYOUT
CITY OF WICHITA PROJ. NO. 472-76-245-81502-000-000-001

Booker/Freund
Engineers Architects Planners

SCALE | DATE | DWG. NO. 89-NB-2

2/18

Location	Excavation Class III Excav. Cu. Yds.	Class AAA (AE) Concrete Cu. Yds.	Steel Reinf. Lbs.	# Pr. Conc. S-T Beams Lin. Ft.	## Pr. Conc. D-T Beams Lin. Ft.	≠ Pr. Conc. Piles (12") Lin. Ft.	≠≠ Pr. Conc. Piles (14") Lin. Ft.	Approach Slab Each	** Latex Surf. Course (1½") Sq. Yds.	Removal of Ex. Structure Lump Sum	Steel Handrail Lin. Ft.	30" Storm Sewer Lin. Ft.		4" Reinf. Conc. Riprap Sq. Yds.	Revetment Mats Sq. Yds.	Removal of Large trees Each	Removal of Exist. CMP Lin. Ft.	Contractor Furnished Compacted Embankment Cu. Yds.
Abutment #1	90	32.5	2,870	—	—	500	—	—	—		13			—	—	—	—	—
Pier #1	—	13.1	1,460	—	—	—	500		—		—			—	—	—	—	—
Pier #2	—	13.1	1,430	—	—	—	400		—		—			—	—	—	—	—
Pier #3	—	13.1	1430	—	—	—	360		—		—			—	—	—	—	—
Abutment #2	90	32.5	2870	—	—	450			—		13			—	—	—	—	—
Superstructure	—	202.6	62,060	876.0	438.0	—			1256		442			—	—	—	—	—
TOTAL	180	307.7	72,120	876.0	438.0	950	1,260	2	1256	Lump sum	468	© 18.2		81.2	932	2	43'	1754

#8@ 49'-10" 8@ 59'-8" ## 4@ 49'-10" 4@ 59'-8" ≠ 10@ 50' 10@ 45' ≠≠ 13@ 50' 8@ 45' ** See details below © includes 1 End Section

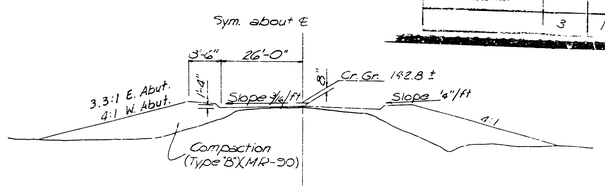

TYPICAL SECTION
COMPACTED EMBANKMENT
Sta. 39+00 to 39+38.59
and Sta. 41+61.09 to 42+00

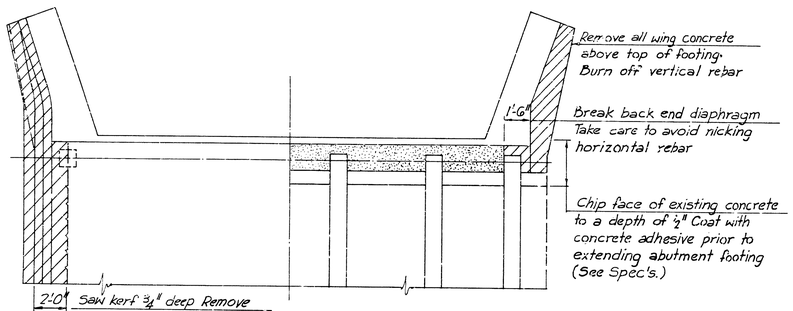

PLAN AT ABUTMENT

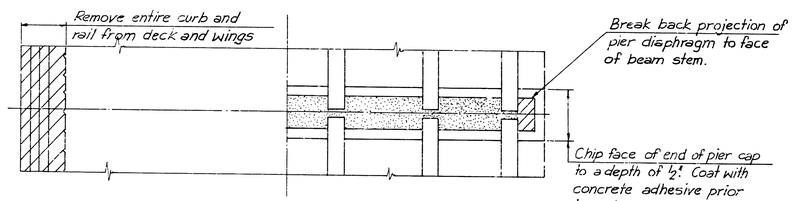

PLAN AT PIER

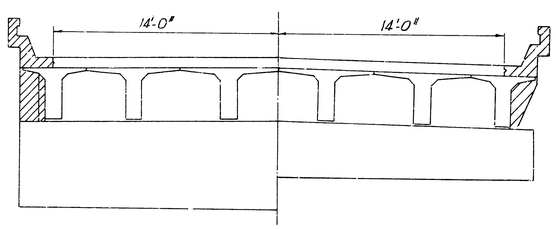

HALF SECTION NEAR ABUTMENT

HALF SECTION NEAR PIER

LIMITS OF REMOVAL OF EXISTING STRUCTURE

GENERAL NOTES:

BRIDGE EXCVATION: All bridge excavation shall be Class III. See Sheet 14 for limits of Pay Excavation.

SOUNDINGS: Sounding information shown on Sheet 2 is as obtained from borings made in the field by Engineering Testing Company, and represents the best information available to the City of Wichita.

BEARING PILES: Piles shall be 12" prestressed concrete piles in abutments and 14" prestressed concrete piles in piers, as detailed on Sheet 13. Piles shall be driven to the penetration shown unless in the opinion of the Engineer such penetration cannot be secured without injury to the pile. The design bearing value of the piles are 25 tons per pile in Abutments, 33 tons per pile in Pier #1, and 45 tons per pile in Piers # 2 and #3. All piles except those at Abutment #1 and Pier #1 shall be driven to the design bearing values. Driving of piles for Abutment #1 and Pier #1 shall be halted as soon as design bearing values are achieved, or at one foot above cut-off elevation, whichever occurs first. Further driving may result in reduced bearing values.

PILE DRIVING: All piles shall be driven with a steam or diesel hammer. If a diesel hammer is used, sufficient hammer data shall be provided to permit rating by the Engineer before driving starts.

REMOVAL OF EXISTING STRUCTURE: See this sheet for details of removal of existing structure.

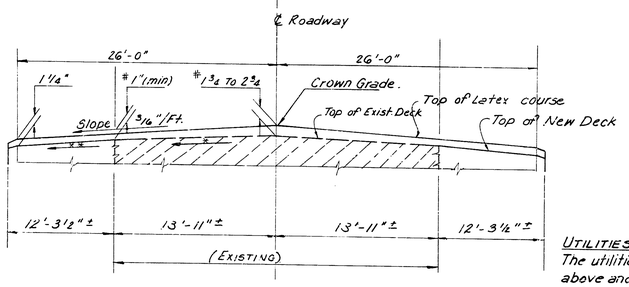

* Exist. Transverse Slope (Varies) flatter than ⅜"/ft.

** New Deck Transverse Slope ⅜"/ft. ±

Note: Latex course thicknesses noted on this detail are based on field notes and are approximate.

LATEX COURSE DETAILS

CONCRETE: Class AAA(AE) Concrete shall be used in the bridge construction, including abutments, piers, diaphragms, deck, rail, approach slabs and reinforced concrete riprap, except for prestressed concrete beams. Bevel all exposed edges with a 3/4" triangular molding unless otherwise noted.

REINFORCING STEEL: All reinforcing steel shall be Grade 40, minimum. All dimensions relative to reinforcing steel placement are to centerline of bars unless otherwise noted. All dimensions shown in bending diagrams are out to out of bars.

DECK TREATMENT: Sidewalks, approach slabs and reinforced concrete riprap shall be cured with emulsified Linseed Oil, in accordance with the K.D.O.T. Specifications. As bricking of concrete traffic rail is completed, curing shall be continued by spraying with Linseed Oil Emulsion. Bridge (Roadway) deck shall receive a wearing course consisting of Latex Modified Concrete. Thickness will vary from a minimum of 1 inch to a maximum of 2 3/4 inches due to irregularities in the existing deck. See details on this sheet.

APPROACH SLABS: The item of "Approach Slab" includes fine grading, and furnishing, forming and finishing all concrete and reinforcing steel required for one approach slab at each end of the bridge, as detailed on Sheet 11. Class AAA(AE) Concrete shall be used in approach slabs. Approximate quantities, each slab (2 thus): Class AAA(AE) Concrete: 40.2 Cu. Yds., Reinforcing Steel: 5170 Lbs., including 42 Lbs. of welded wire fabric.

REVETMENT MATS: Revetment Mats shall be Fabriform grouted erosion control mats fabricated and installed in accordance with these plans and the Supplemental Specifications.

QUANTITIES: All quantities shown on these plans shall be used as final pay quantities, except that measurement of piling shall be in accordance with the Specifications.

GENERAL REQUIREMENTS: It is the intention of these Plans and Specifications that construction of this project shall be in accordance with applicable Standard Specifications and requirements of the Kansas Department of Transportation and that materials shall conform to these specifications unless otherwise noted.

DESIGN LOADING: H20-44 A.A.S.H.T.O. Spec. (1977 Edition)

UNIT STRESSES:

f'c = 4,000 p.s.i. Class AAA(AE)
fc = 1,600 p.s.i. Class AAA(AE)
fs = 20,000 p.s.i. Reinf.(Gr. 40)

DESIGN PILE PRESSURE:

25 Tons per Pile (Abutments)
33 Tons per Pile (Pier 1)
45 Tons per Pile (Piers 2 & 3)

Utilities

Gas: Arkansas-Louisiana Gas Co.
1630 South Baehr
Wichita, Ks 67218
Mr. Tom Collins. 942-8350

Telephone: Southwestern Bell Telephone Co.
626 N. Broadway
Wichita, Ks 67203
Mr. R.M. Alley 268-2932

Water Main (16"): Wichita Water Department
Engineering 268-4555

Electric: K.G.E. 264-1141

UTILITIES:
The utilities as indicated on these plans, both above and below ground, represent the best information available at this time. It is the contractors responsibility to contact each of the utility companies involved for accurate field location of their utilities prior to beginning any excavation or construction work on this project.

WEST CENTRAL AVE. BRIDGE WIDENING
OVER COWSKIN CREEK
GENERAL NOTES & SUMMARY OF BRIDGE QUANTITIES
CITY OF WICHITA PROJ. NO. 472-76-245-81502-000-000-001

Booker/Freund
Engineers Architects Planners

SCALE | DATE | DWG NO. 89-NB-3

APP. CKD. TR. DR. DES. PLOT. SURV.

3/18

Dec-81 GENERAL NOTES & SUMMARY OF BRIDGE QUANTITIES 89-NB

Note: * Construct wingwall after sidewalk topping is complete and match elevation. Provide ½" Expansion Joint Filler between end of wingwall and sidewalk diaphragm.

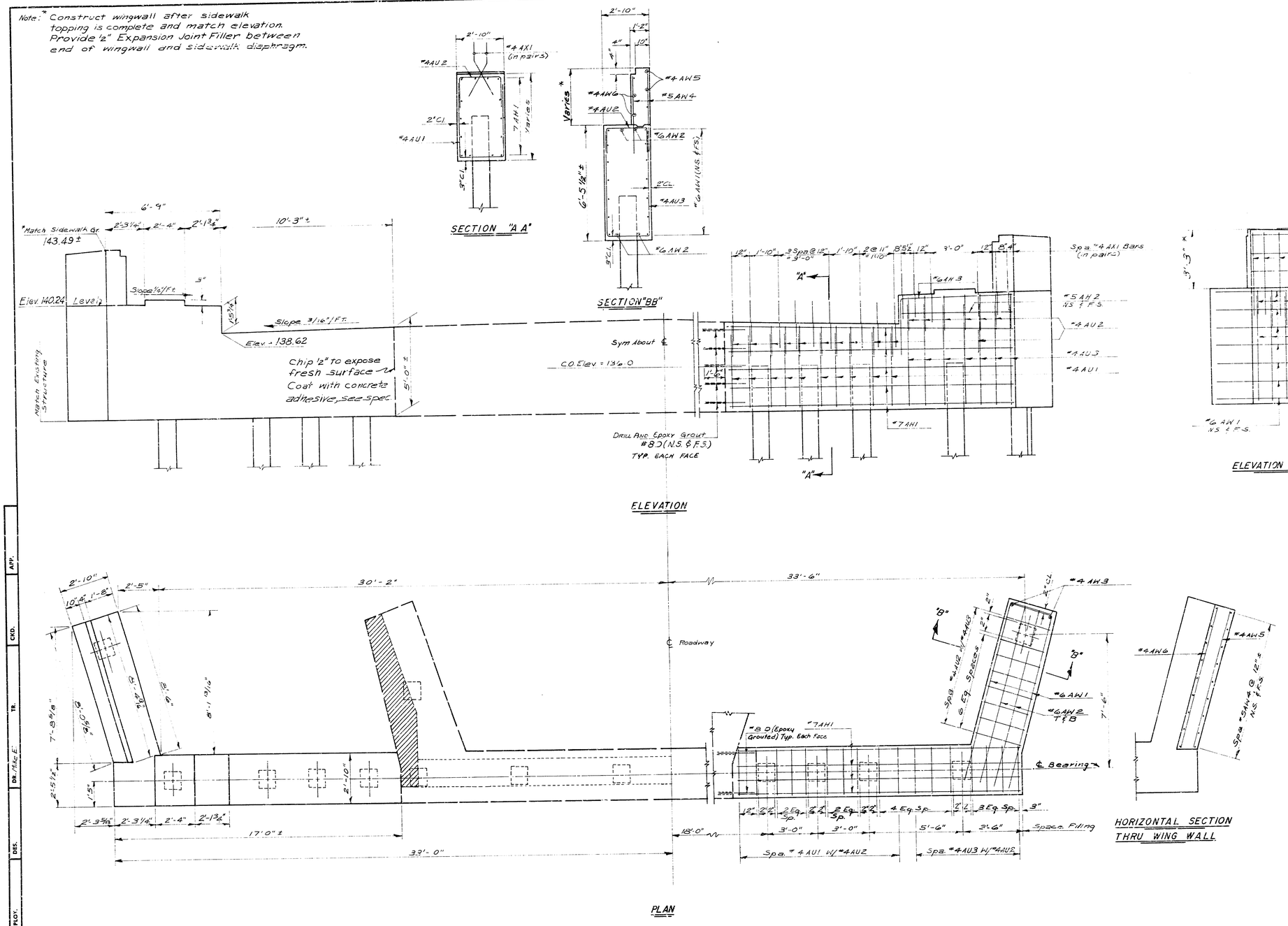

NOTES:
See Sheet 3 for removal of existing structure.
Class AAA(AE) Concrete shall be used in abutments. Bevel all exposed edges with a 3/4" triangular molding unless otherwise indicated.
All dimensions relative to placement of reinforcing steel are to centerline of bars unless otherwise indicated.
Abutment piles shall be as indicated on Sheet 2 and as detailed on Sheet 13.

See Sheet 3 for General Notes and Summary of Quantities.
See Sheet 12 for Bar List and Bending Diagrams.

DESIGN LOADING: H20-44 A.A.S.H.T.O. Spec. (1977 Edition)

UNIT STRESSES:
f'c = 4,000 p.s.i. Class AAA(AE)
fc = 1,600 p.s.i. Class AAA(AE)
fs = 20,000 p.s.i. Reinf.(Gr. 40)

DESIGN PILE PRESSURE: 25 Tons per Pile (Abutment)

WEST CENTRAL AVE. BRIDGE WIDENING
OVER COWSKIN CREEK
ABUTMENT DETAILS
CITY OF WICHITA PROJ. NO. 472-76-245-81502-000-000-001

Booker/Freund
Engineers Architects Planners

SCALE | DATE | DWG. NO. 89-NB-4

4/18

89-NB-4

BRIDGE PROJECT NO. | SHEET 5 | 15

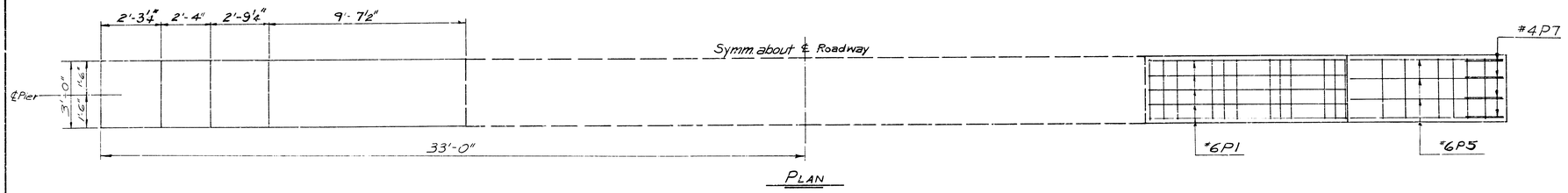

PLAN

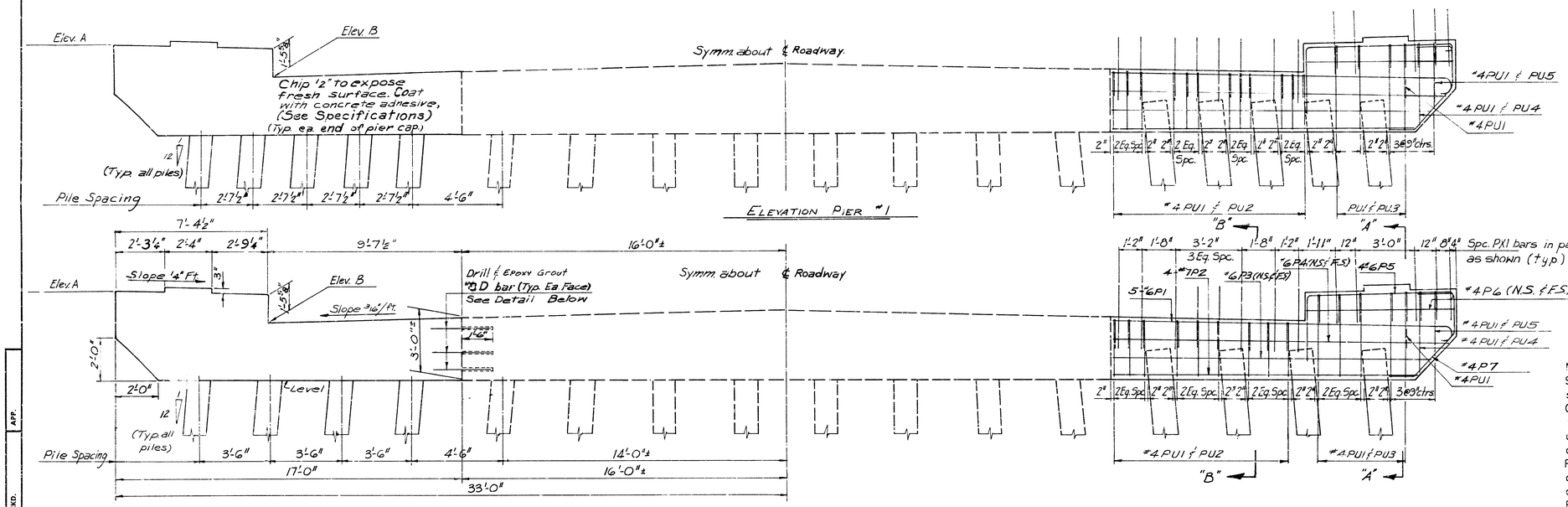

ELEVATION PIER #1

ELEVATION PIER #2 & #3

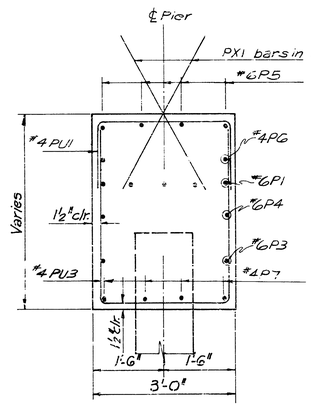

SECTION "A-A"

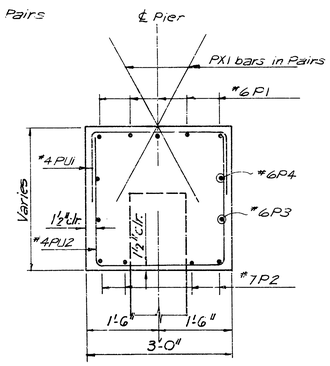

SECTION "B-B"

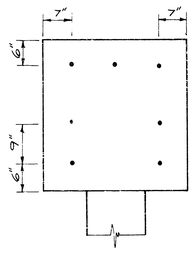

DOWEL BARS LOCATION
(Typ. ea. face of pier cap)

TABLE OF ELEVATIONS

	Elev "A"	Elev "B"	Pile Cutoff		
Pier #1	140.76	139.14	137.6		
Pier #2	140.98	139.36	137.8		
Pier #3	140.76	139.14	137.6		

NOTES:
See Sheet 3 for removal of existing structure.
Class AAA(AE) Concrete shall be used in piers. Bevel all exposed edges with a 3/4" triangular molding unless otherwise indicated.
All dimensions relative to placement of reinforcing steel are to centerline of bars unless otherwise indicated.
Pier piles shall be as indicated on Sheet 2 and as detailed on Sheet 13.

See Sheet 3 for General Notes and Summary of Quantities.
See Sheet 12 for Bar List and Bending Diagrams.

DESIGN LOADING: H20-44 A.A.S.H.T.O. Spec. (1977 Edition)
UNIT STRESSES:
f'c = 4,000 p.s.i. Class AAA(AE)
fc = 1,600 p.s.i. Class AAA(AE)
fs = 20,000 p.s.i. Reinf.(Gr.40)

DESIGN PILE PRESSURE:
33 Tons per Pile (Pier #1)
45 Tons per Pile (Piers #2 & #3)

WEST CENTRAL AVE. BRIDGE WIDENING
OVER COWSKIN CREEK
PIER DETAILS
CITY OF WICHITA PROJ. NO. 472-76-245-81502-000-000-001

Booker/Freund
Engineers Architects Planners

SCALE | DATE | DWG NO. 89-NB-5

5/18

APP. CKD. TR. DR. DES. PLOT. SURV.

1 123

PIER DETAILS 89-NB

BRIDGE PROJECT NO.	SHEET	
	6	15

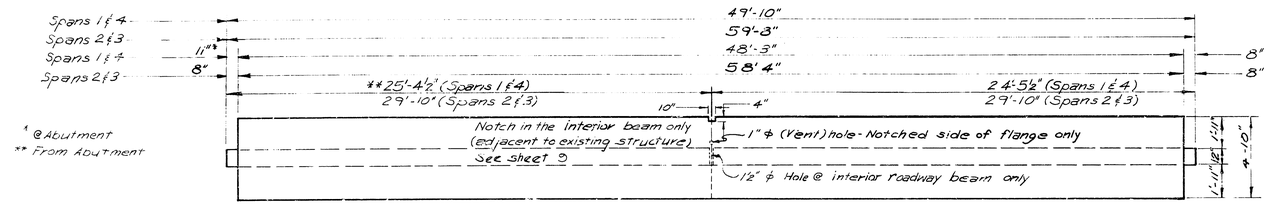

PLAN

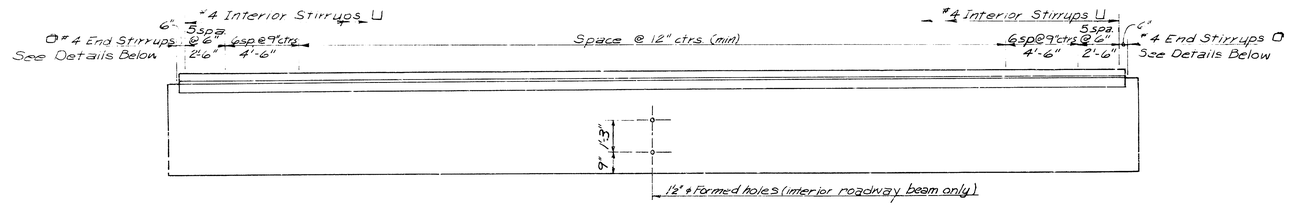

ELEVATION

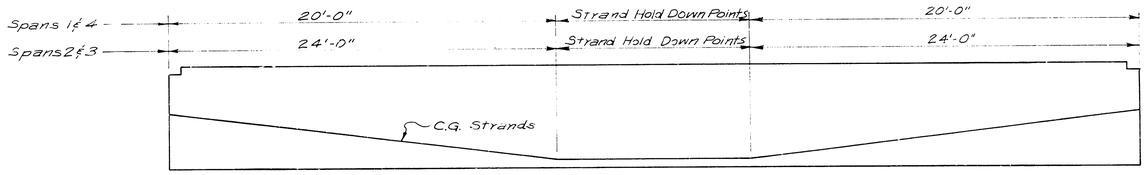

ELEVATION

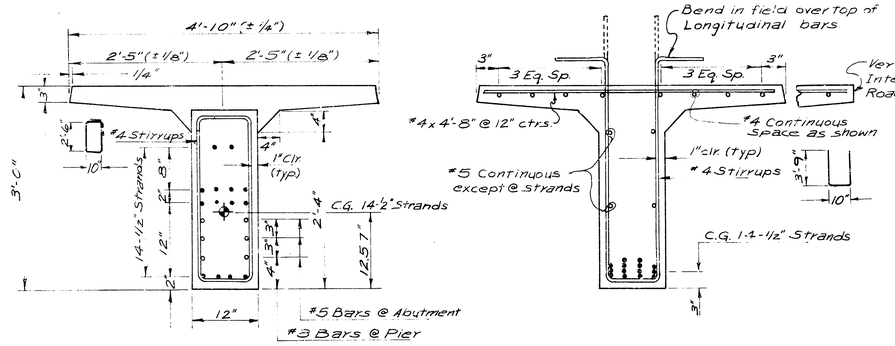

SECTION @ END

SECTION @ MID-SPAN

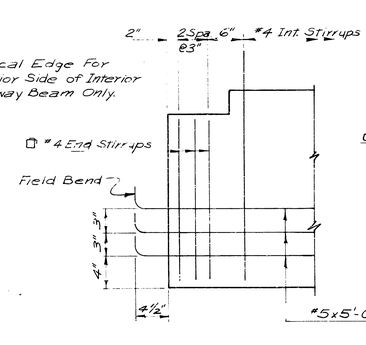

END DETAILS @ ABUTMENT

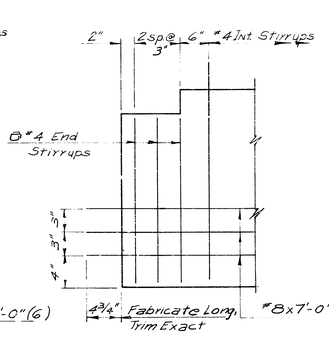

END DETAILS @ PIER

PRESTRESSING STEEL:
1/2" nominal diameter 7-wire high tensile type, uncoated, stress relieved strands having the following properties:
Minimum Ultimate Strength: 269,000 p.s.i.
Initial Stress: . . . . . 187,000 p.s.i.
Initial Tension per Strand: 28,910 lbs.

All dimensions shown relative to placement of reinforcing steel are to centerline of bars or strands unless otherwise noted.

Precast beams shall at all times be handled and transported in an upright position and points of support shall be approximately the same during transportation and storage as when the beam is in its final position.

See Sheet 9 for Beam Erection Notes.

DESIGN LOADING: H20-44 A.A.S.H.T.O Spec. (1977 Edition)

UNIT STRESSES (ROADWAY BEAMS):
Concrete: f'c = 5,000 p.s.i. @ 28 days
f'ci = 4,350 p.s.i. (Minimum Release Strength)

[redacted]

WEST CENTRAL AVE. BRIDGE WIDENING
OVER COWSKIN CREEK
ROADWAY BEAM DETAILS

CITY OF WICHITA PROJ. NO. 472-76-245-81502-000-000-001

Booker/Freund
Engineers Architects Planners

SCALE	DATE	DWG. NO.
		89-NB-6

6/18

APP. CKD. DR. DES. PLOT. SURV.

PRES. BEAM 89-NB

BRIDGE PROJECT NO. | SHEET NO. 7 | 15

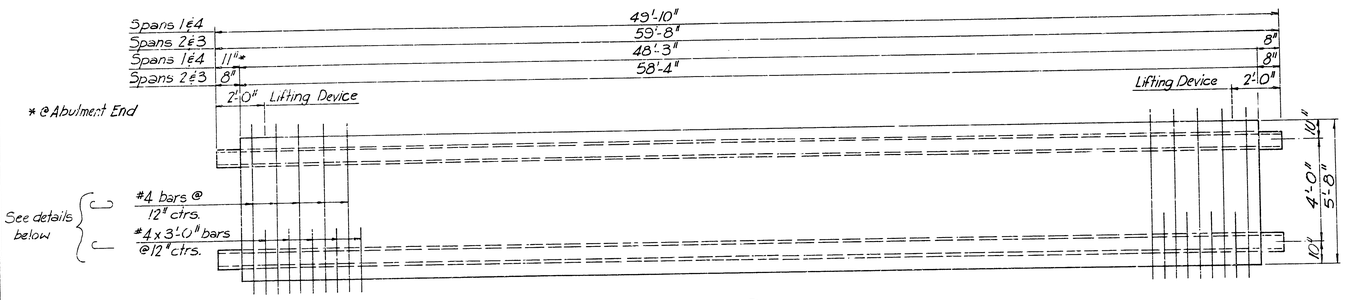

PLAN

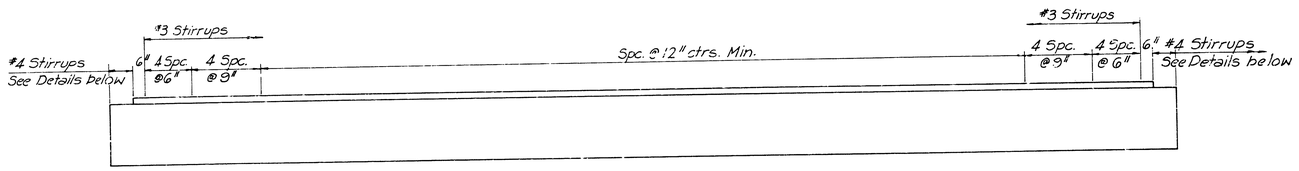

ELEVATION

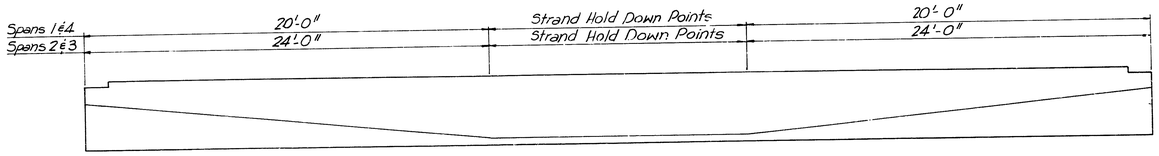

ELEVATION

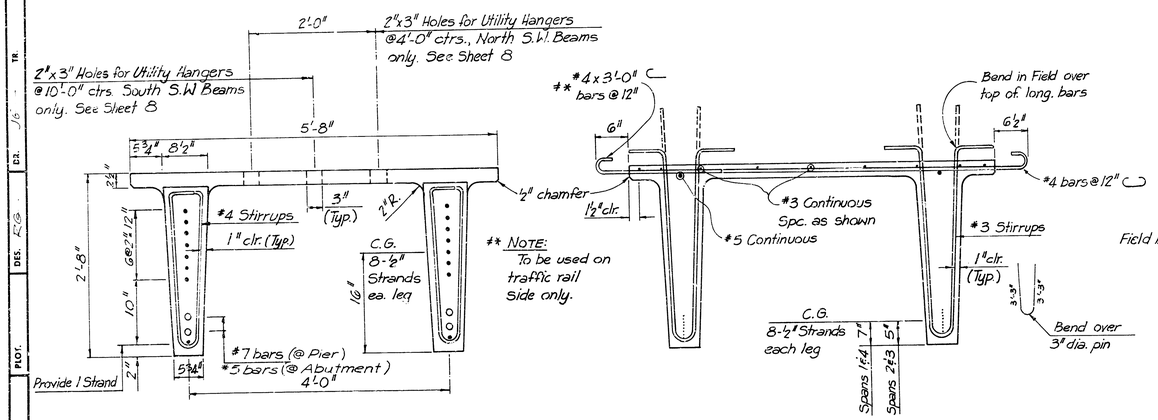

SECTION AT END

SECTION AT MID-SPAN

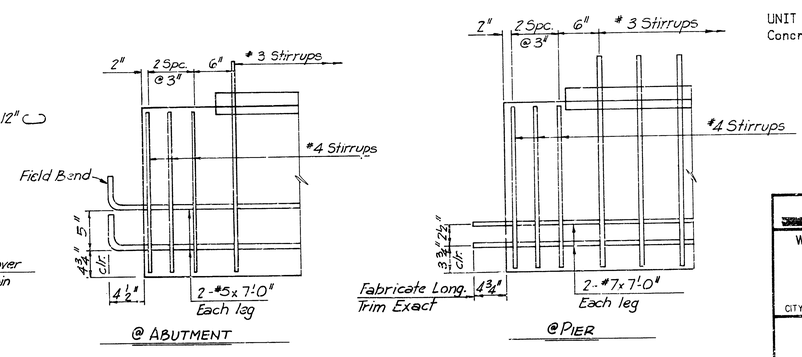

END DETAILS

PRESTRESSING STEEL:
1/2" nominal diameter 7-wire high tensile type, uncoated, stress relieved strands having the following properties:
Minimum Ultimate Strength: 268,000 p.s.i.
Initial Stress: . . . . . 187,000 p.s.i.
Initial Tension per Strand: 28,910 lbs.

All dimensions shown relative to placement of reinforcing steel are to centerline of bars or strands unless otherwise noted.

Precast beams shall at all times be handled and transported in an upright position and points of support shall be approximately the same during transportation and storage as when the beam is in its final position.

See Sheet 9 for Beam Erection Notes.

DESIGN LOADING: H20-44 A.A.S.H.T.O Spec. (1977 Edition)

UNIT STRESSES (SIDEWALK BEAMS):
Concrete: f'c = 5,000 p.s.i. @ 28 days
f'ci = 4,000 p.s.i. (Minimum Release Strength)

APP. | CKD. | TR. | DES. | PLOT. | SURV.

WEST CENTRAL AVE. BRIDGE WIDENING OVER THE COWSKIN CREEK

SIDEWALK BEAM DETAILS

CITY OF WICHITA PROJ. NO. 472-76-245-81502-000-000-001

Booker/Freund Engineers Architects Planners

SCALE | DATE | DWG. NO. 89-NB-7

7/18

BRIDGE PROJECT NO. 8 15

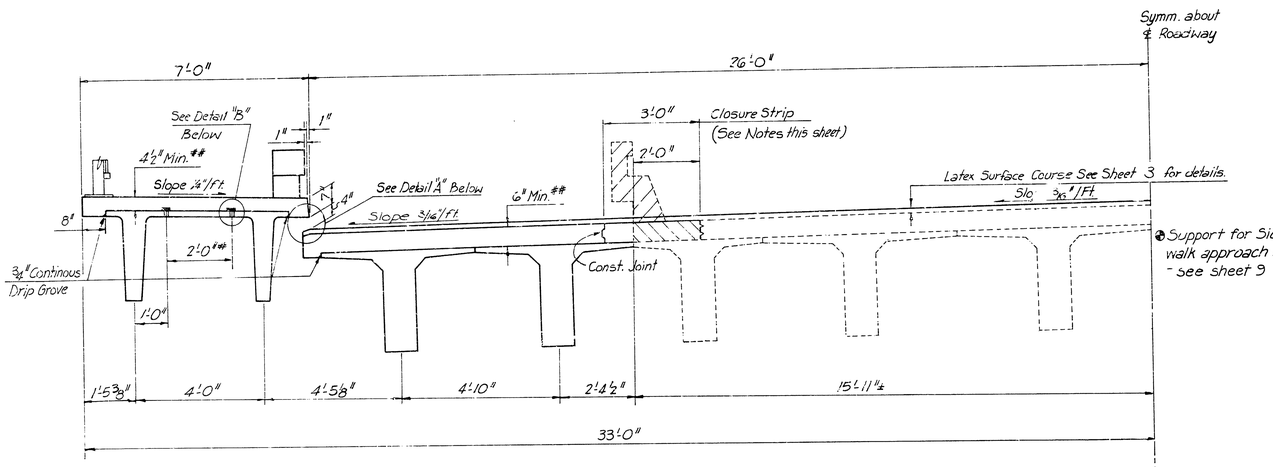

SUPERSTRUCTURE SECTION

Minimum thickness; Adjust crown grade as required to compensate for final camber in beams.

Install Grinnell #282 inserts for telephone line hangers under North sidewalk, @ 4'-0" ctrs. 4'-3" from ℄ Abutment.

*= Install Grinnell #282 inserts for gas line hangers under South sidewalk, @ 10'-0" ctrs. 5'-3" from ℄ Abutment.

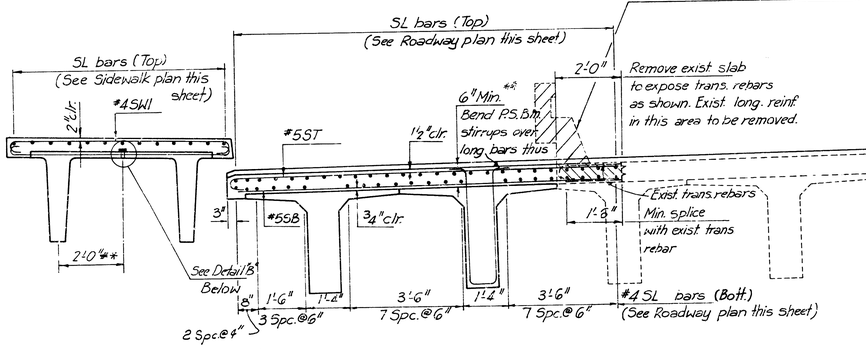

SUPERSTRUCTURE SECTION SHOWING REINFORCING AT PIER

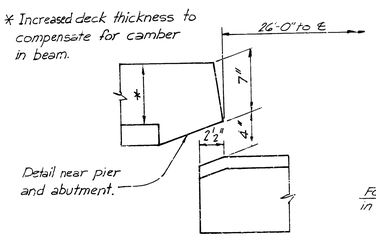

DETAIL "A"

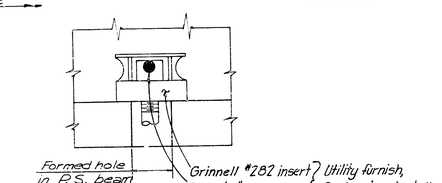

DETAIL "B"

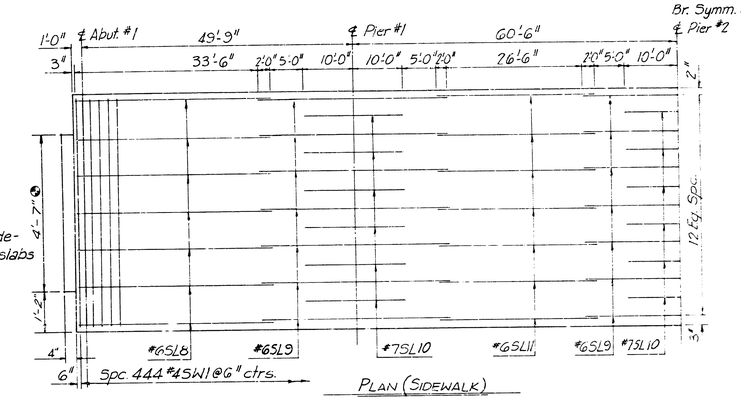

PLAN (SIDEWALK)

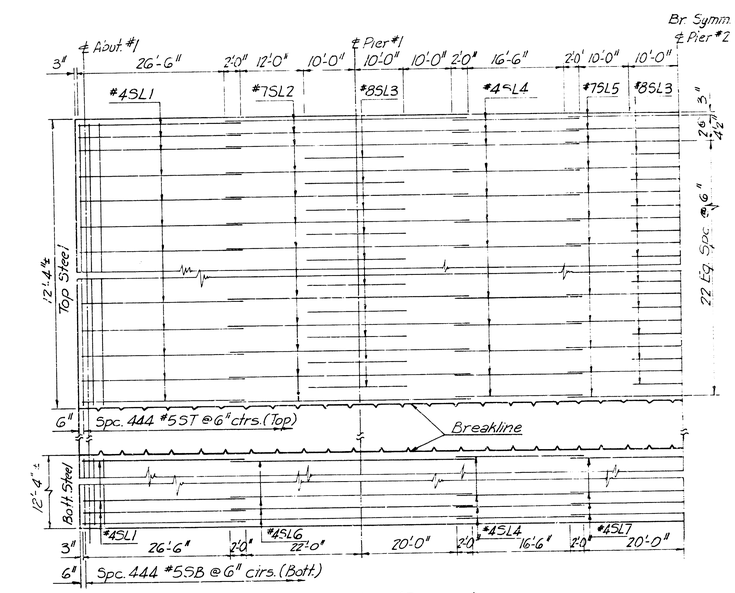

PLAN (ROADWAY)

NOTES:

Class AAA(AE) shall be used in the superstructure (Roadway ℄ Sidewalk) including diaphragms and rail, except for prestressed beams. Bevel all exposed edges with a triangular moulding unless otherwise noted.

All dimensions relative to reinforcing steel are to centerline of bars unless otherwise noted.

Beam connections shall not be welded or pier diaphragms placed until all beams have cured a minimum of 28 days. Welding shall preferably proceed across the the bridges, with all welds in one (pier) diaphragm completed in one operation.

Roadway deck adjacent to "Closure Strips" shall be placed prior to the placing of concrete in midspan diaphragms on the same side. Concrete in the closure strip shall be placed not less than 3 days after midspan diaphragms are poured. Deck shall preferably be placed continuously the full length of the bridge. If a joint is used, it shall be at the quarter point short of the pier.

DESIGN LOAD: H20-44 (A.A.S.H.T.O. 1977 Ed.)

UNIT STRESSES: f'c = 4,000 p.s.i. (Class AAA(AE))
fc = 1,600 p.s.i. (Class AAA(AE))
fs = 20,000 p.s.i. (Reinf. Gr. 40)

See Sheet 3 for Removal of Existing Structure.
See Sheet 3 for General Notes and Summary of Quantities.
See Sheet 10 for Rail Details.
See Sheet 12 for Bar List and Bending Diagram.

[redacted]

WEST CENTRAL AVE. BRIDGE WIDENING
OVER COWSKIN CREEK
SUPERSTRUCTURE LAYOUT

CITY OF WICHITA PROJ. NO. 472-76-245-81502-000-000-001

Booker/Freund Engineers Architects Planners

SCALE | DATE | DWG NO. 89-NB-8

8/18

APP. CKD. DR. JH DES. RG TR. PLOT. SURV.

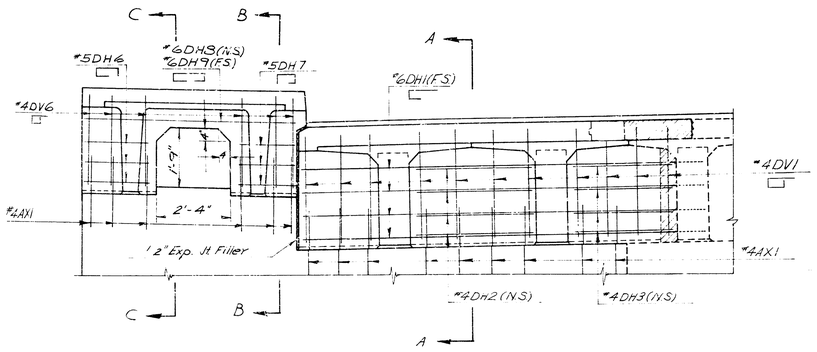

PART ELEVATION OF ABUTMENT DIAPHRAGM

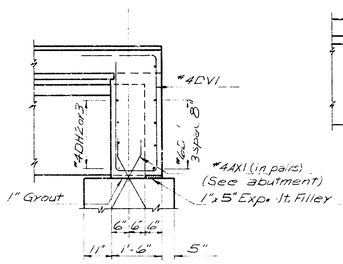

SECTION A-A

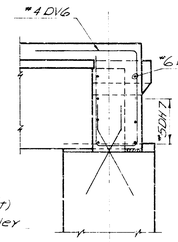

SECTION B-B

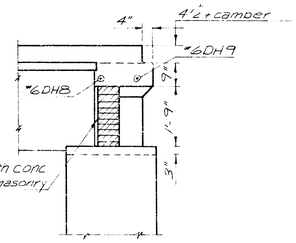

SECTION C-C

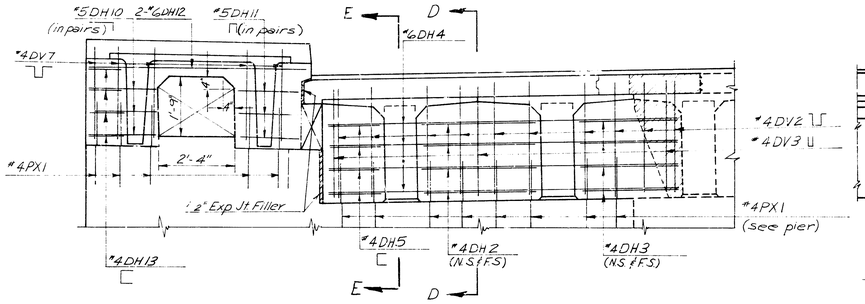

PART ELEVATION OF PIER DIAPHRAGM

Caution: Prior to drilling in Prestressed Beams contractor shall perform radiographic inspection (such as X-ray photographs) in order to make sure that the drilled holes clear all "Prestressed Strands" in the existing beam. This work shall not be paid for directly but shall be subsidiary to the bid item Class AAA (AE) Concrete.

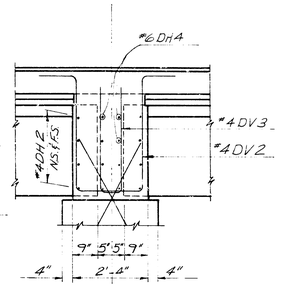

SECTION D-D

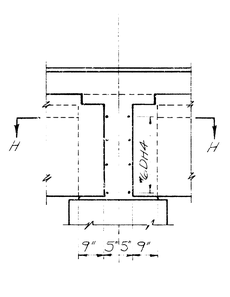

SECTION E-E

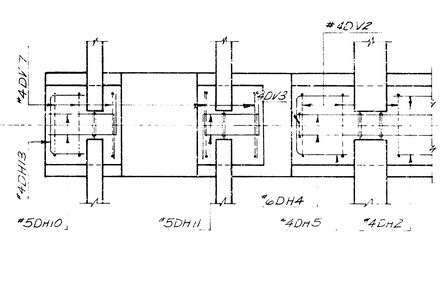

PLAN SECTION AT PIER

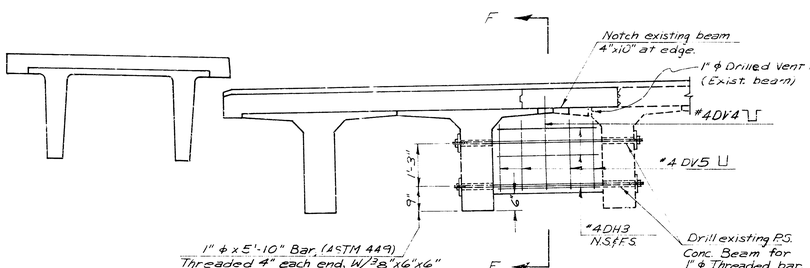

ELEVATION OF MID-SPAN DIAPHPRAM

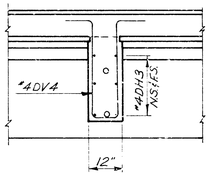

SECTION F-F

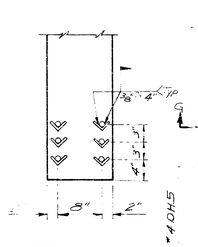

SECTION G-G

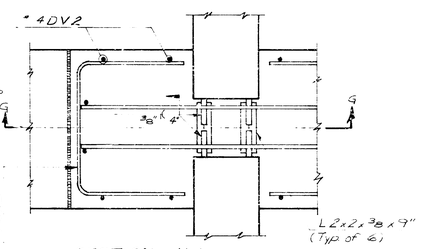

SECTION H-H

Note. Angles and welds typical also at sidewalk beams. Rotate angles if necessary. Angles shall be subsidiary to the bid item "Prestressed Concrete Beams"

BEAM ERECTION NOTES:

Beams may be placed on the bridge at any time after the end of the curing period. Beams shall be placed and set as shown, with the tops conforming to the crown of the deck surface. Beams shall be set as indicated on this sheet, with each line of beams carefully aligned across the piers. In case of variation in length, equalize the variation between the two ends of the beam.

Set each beam on a full bed of stiff grout, as noted. To insure proper positioning, set each beam in position, without grout; lift one end at a time just sufficiently to place a grout bed, and set down on the grout.

Beam ends shall have a full bearing on grout, only; they shall not be set on metal bars or rods. Temporary wood or metal wedges may be used to maintain grout thickness and prevent tipping, but if used shall be removed before diaphragm concrete is placed. Temporary short shores under the flanges to the top of the pier may be helpful in maintaining beam position until diaphragm concrete is placed and set up.

See Sheet 3 for Removal of Existing Structure.
See Sheet 8 for Superstructure Layout.

WEST CENTRAL AVE. BRIDGE WIDENING
OVER COWSKIN CREEK
SUPERSTRUCTURE DETAILS
CITY OF WICHITA PROJ. NO. 472-76-245-81502-000-000-001
Booker/Freund Engineers Architects Planners
SCALE | DATE | DWG. NO. 89-NB-9

APP. CKD. TR. DR. DES. PLOT. SURV.

JOB PROJECT NO.	SHEET NO.	TOTAL SHEETS
	10	15

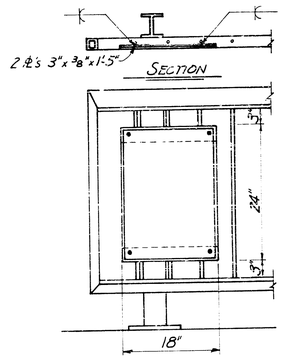

PROJECT MARKER MOUNTING

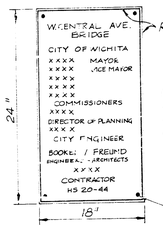

Raised Border

Note: XXXX Names as directed by the Engineer, furnished by the City Engineer. Contractor to furnish rubbing before casting.

Mounting Location Detail (Typ.)

PROJECT MARKER
(To be furnished and installed by Contractor. Subsidiary to Bid Item "Steel Handrail")

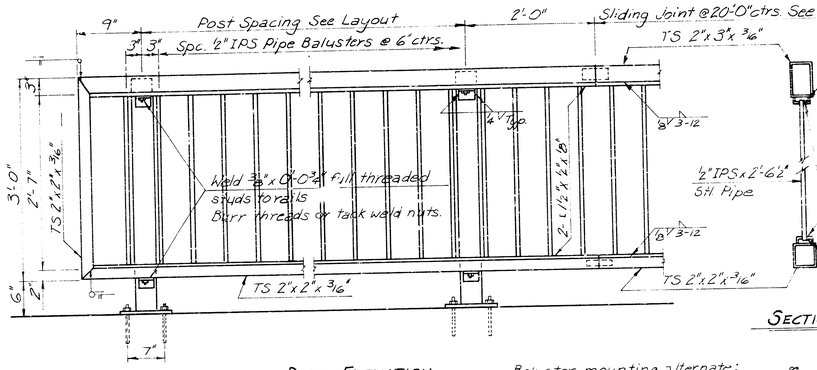

PART ELEVATION

Note:
Steel for handrail shall conform to ASTM A-500, Grade B structural steel tubing; posts, base plates and clip angles to be ASTM A-36 steel. Pay length for handrail is center to center of end posts. Shop and field coats shall conform to the basic Lead Silico Cromate system in accordance with the Standard Specifications.

Baluster mounting alternate:
At the contractors option, "roll" the pipe end; use longer pipe if necessary.

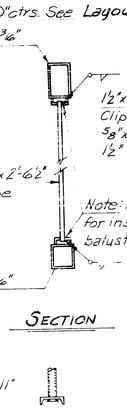

SECTION

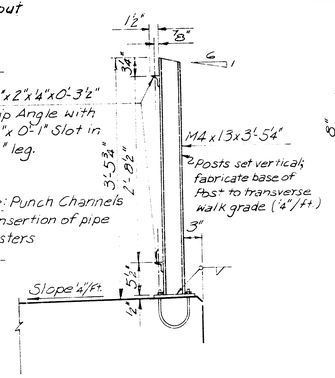

POST

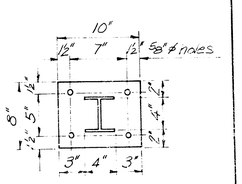

BASE PLATE
PL 8"x 2'x 0'-10"

U-BOLT

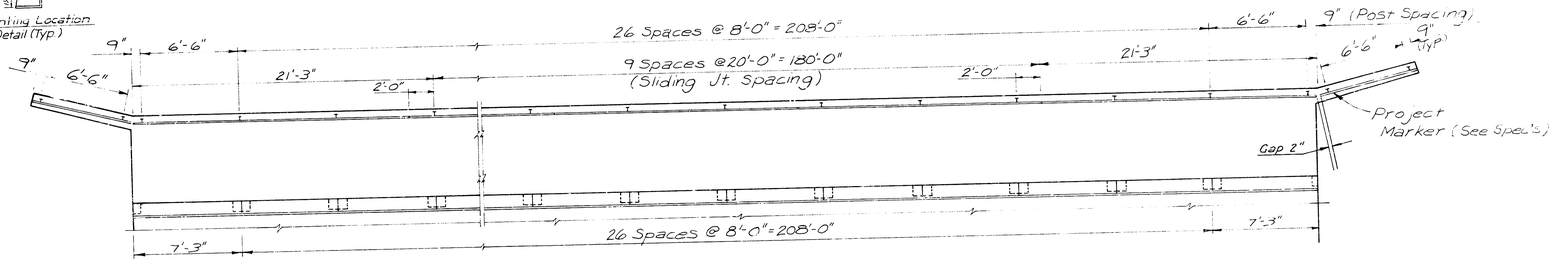

HANDRAIL LAYOUT

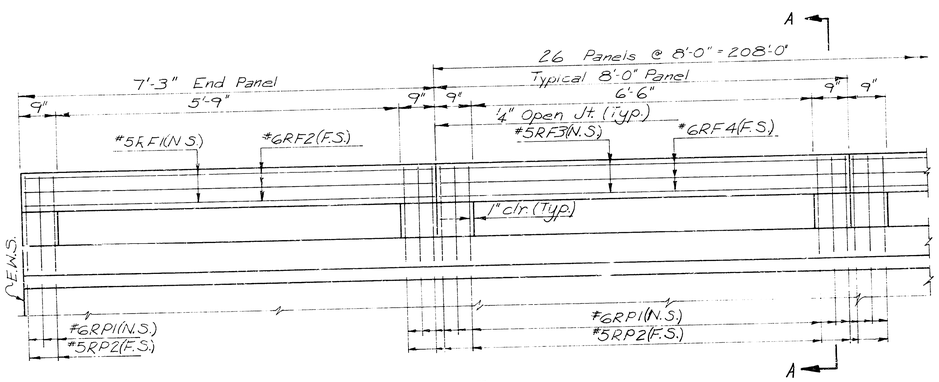

BRIDGE RAIL ELEVATION

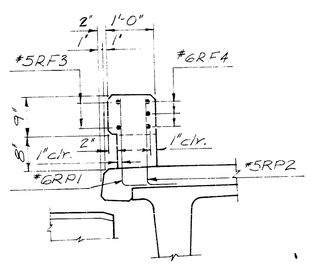

SECTION A-A

See Sheet 3 for General Notes and Summary of Bridge Quantities.
See Sheet 12 for Bar List & Bending Diagrams.

WEST CENTRAL AVE. BRIDGE WIDENING
OVER COWSKIN CREEK
HANDRAIL DETAILS
CITY OF WICHITA PROJ. NO. 472-76-245-81502-000-000-001

Booker/Freund
Engineers Architects Planners

SCALE | DATE | DWG. NO. 89-NB-10

APP. CKD. TR. DR. DES. PLOT. SURV.

10/18

BRIDGE PROJECT NO. 11 15

472-76-245-81502-000-000-001

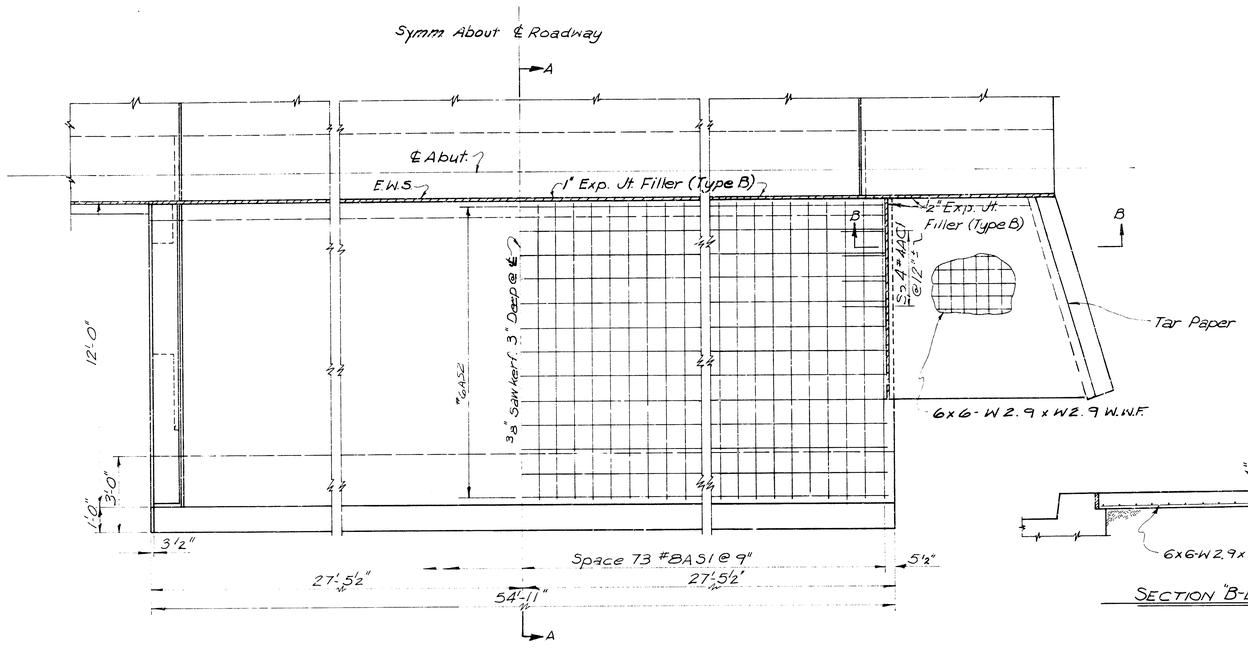

PLAN

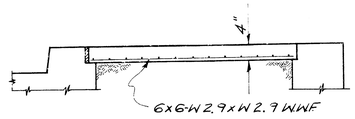

SECTION "B-B"

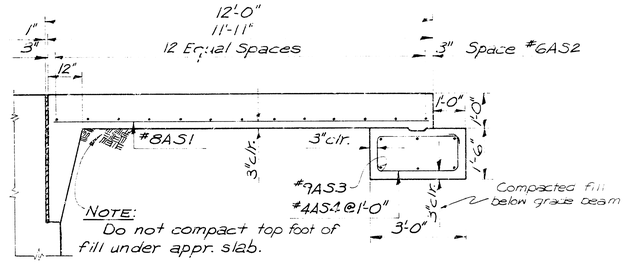

SECTION A-A

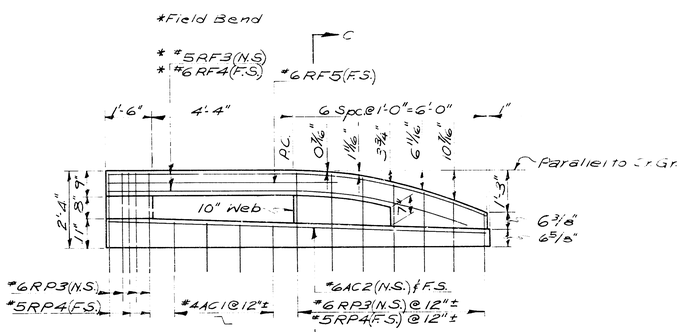

ELEVATION OF APPROACH SLAB RAIL

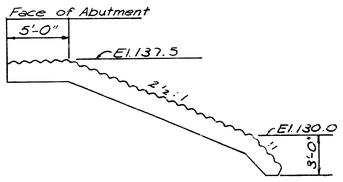

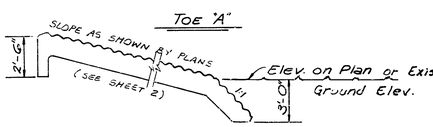

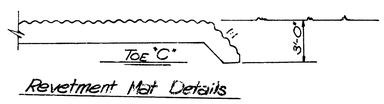

Revetment Mat Details

Revetment Mats shall be "Fabri-Form" as manufactured by Construction Techniques Inc, 11900 Shaker Blvd, Cleveland Ohio 44120 or as approved equal, See Spec.

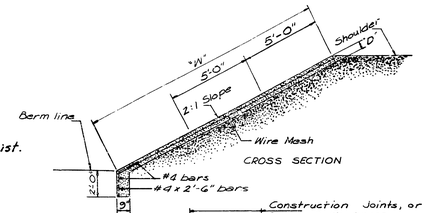

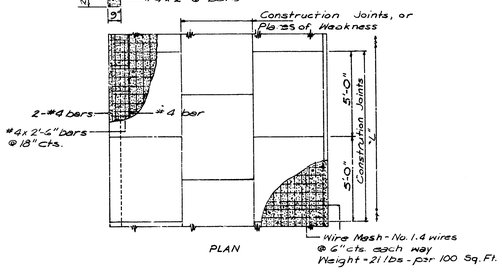

CONCRETE RIPRAP

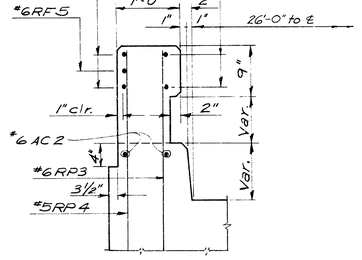

SECTION "C-C"

NOTE: Riprap shall be of Class "A" concrete. Wire Reinforcing Mesh shall be of the electrically welded, square mesh type and shall be composed of No. W1.4 steel wire spaced at 6" ctrs. each way.
Reinforcement as shown is included in unit price bid for "Reinforced Concrete Riprap."
Measurement of Concrete Riprap shall be in Sq. Yds. and shall be the outside surface area, including the toe wall, regardless of the thickening shown on the plans.
Concrete Riprap shall be cured by use of Linseed Oil Emulsion. See Supplemental Spec's.

See Sheet 3 for General Notes and Summary of Bridge Quantities.
See Sheet 12 for Bar List & Bending Diagrams.

WEST CENTRAL AVE. BRIDGE WIDENING
OVER COWSKIN CREEK
RIPRAP AND
APPROACH SLAB DETAILS
CITY OF WICHITA PROJ. NO. 472-76-245-81502-000-000-001

Booker/Freund
Engineers Architects Planners

SCALE | DATE | DWG. NO. 83-NB-11

APP. CKD. TR. DR. DES. PLOT. SURV.

11/18

BAR LISTS

Abutments (2 thus)

STRAIGHT BARS				BENT BARS			
Mark	No. Reqd	Size	Lgth.	Mark	No. Reqd	Size	Lgth.
AH1	28	7	16'-6"	AH3	8	6	9'-3"
AH2	4	5	6'-6"				
D	20	8	3'-0"				
AW2	8	6	10'-0"	AU1	20	4	10'-6"
AW3	4	4	6'-6"	AU2	50	4	6'-0"
AW4	36	5	4'-6"	AU3	30	4	14'-6"
AW5	6	4	7'-9"				
AW6	6	4	8'-2"	AW1	28	6	12'-0"
				AX1	60	4	3'-0"

Pier #1

STRAIGHT BARS				BENT BARS			
Mark	No. Reqd	Size	Lgth.	Mark	No. Reqd	Size	Lgth.
P2	8	7	14'-8"	P1	10	6	17'-4"
P3	4	6	15'-6"	P5	8	6	10'-8"
P4	4	6	16'-6"	P7	8	4	7'-5"
P6	4	4	7'-0"				
				PU1	38	4	6'-3"
				PU2	24	4	7'-9"
PX1	52	4	3'-0"	PU3	8	4	10'-9"
				PU4	2	4	9'-9"
D	14	8	3'-0"	PU5	2	4	7'-9"

Piers 2 & 3

STRAIGHT BARS				BENT BARS			
Mark	No. Reqd	Size	Lgth.	Mark	No. Reqd	Size	Lgth.
P2	8	7	14'-8"	P1	10	6	17'-4"
P3	4	6	15'-6"	P5	8	6	10'-8"
P4	4	6	16'-6"	P7	8	4	7'-5"
P6	4	4	7'-0"				
				PU1	34	4	6'-3"
				PU2	18	4	7'-9"
PX1	52	4	3'-0"	PU3	10	4	10'-9"
				PU4	2	4	9'-9"
D	14	8	3'-0"	PU5	2	4	7'-9"

Superstructure

STRAIGHT BARS				BENT BARS			
Mark	No. Reqd.	Size	Lgth.	Mark	No. Reqd	Size	Lgth.
SB	888	5	12'-0"				
SL1	144	4	28'-6	ST	888	5	12'-7"
SL2	56	7	46'-0"				
SL3	66	8	20'-0"	SW1	888	4	7'-8"
SL4	144	4	20'-6"				
SL5	28	7	44'-0"	RP1	336	6	2'-8"
SL6	88	4	46'-0	RP2	224	5	2'-8"
SL7	44	4	44'-0"				
SL8	28	6	35'-6"	DH1	16	6	15'-7
SL9	42	6	34'-0"	DH5	24	4	5'-3"
SL10	36	7	20'-0"	DH6	12	5	4'-8"
SL11	28	6	30'-6"	DH7	12	5	4'-6"
				RP3	22	6	3'-1"
DH2	64	4	3'-2"	RP4	20	5	3'-1"
DH3	128	4	3'-0"	DH9	4	6	9'-11"
DH4	48	6	10'-9"	DH10	36	5	3'-4"
DH8	4	6	3'-0"	DH11	36	5	4'-5"
DH12	12	6	6'-8"	DH13	24	4	3'-5"
				DV1	44	4	10'-10"
RF1	8	5	7'-0"	DV2	60	4	10'-0"
RF2	12	6	7'-0"	DV3	18	4	6'-8"
RF3	104	5	7'-9"	DV4	6	4	7'-4"
RF4	156	6	7'-9"	DV5	24	4	4'-8"
				DV6	24	4	9'-6"
				DV7	30	4	8'-10"

*Approach Slabs (2 thus)

STRAIGHT BARS				BENT BARS			
Mark	No. Reqd	Size	Lgth.	Mark	No. Reqd	Size	Lgth.
AC2	4	6	11'-8"	AC1	8	4	3'-0"
AS1	73	8	11'-8"	AS4	55	4	7'-6"
AS2	13	6	54'-8"				
AS3	6	9	54'-8"				
RF3	4	5	11'-9"				
RF4	4	6	11'-9"				
RF5	2	6	7'-0"				

*For information only. Subsidiary to bid item "Approach Slab"

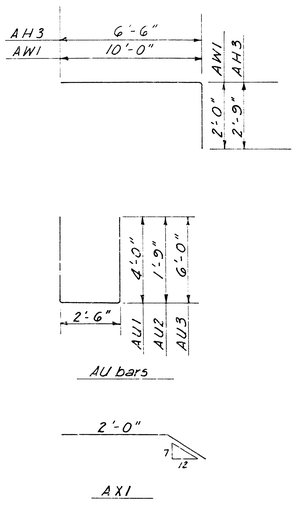

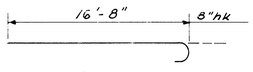

P1

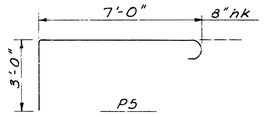

P5

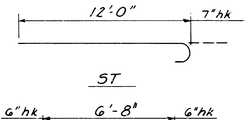

ST

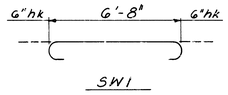

SW1

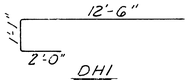

DH1

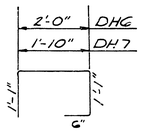

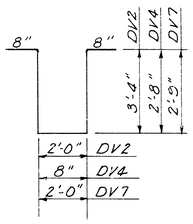

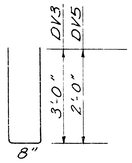

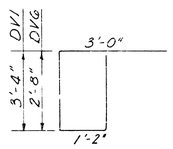

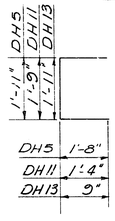

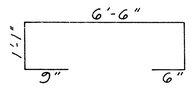

DH9

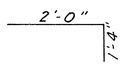

DH10

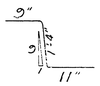

AC1

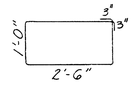

AS4

AU bars

AX1

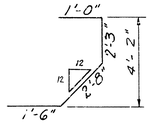

P7

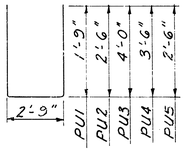

P1 bars

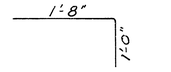

RP1 & RP2 bars

NOTE:
All dimensions in the Bending Diagrams are out to out of bars.

WEST CENTRAL AVE. BRIDGE WIDENING
OVER COWSKIN CREEK
BAR LIST & BENDING DIAGRAMS
CITY OF WICHITA PROJ. NO. 472-76-245-81502-000-000-001

Booker/Freund Engineers Architects Planners

12/18

SCALE | DATE | DWG. NO. 89-NB-12

BRIDGE PROJECT NO. | SHEET NO. 12 | 15

AVP. CKD. TR. DES. PLOT. SURV.

FHWA REGION NO.	STATE	PROJECT NO	YEAR	SHEET NO.	SHEETS
7	KANSAS	472-76-245-81502-000-000-001	19	13	15

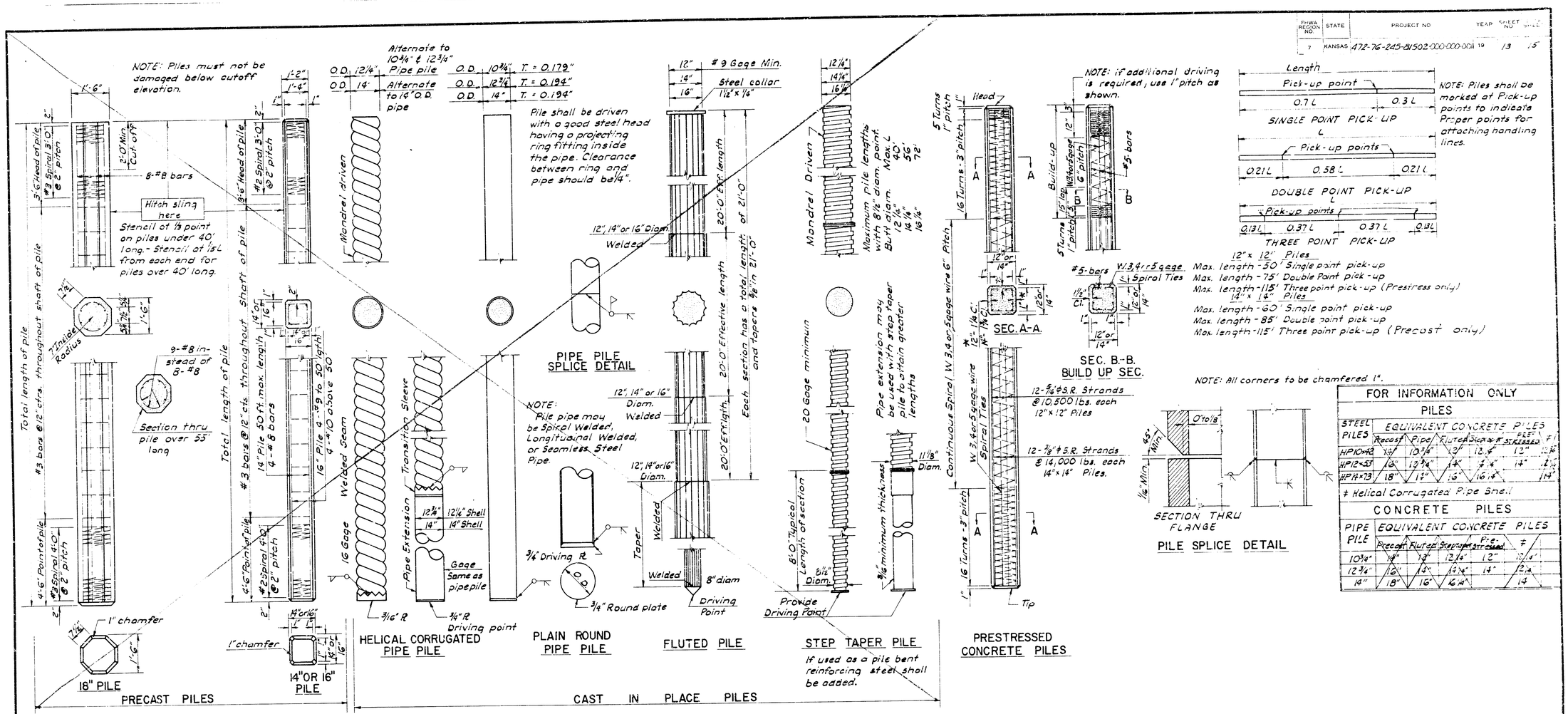

FOR INFORMATION ONLY

PILES

STEEL PILES	EQUIVALENT CONCRETE PILES					
	Precast	Pipe	Fluted	Step Taper	# Stressed	Pile
HP10×42	12"	12¾"	12"	12"	12"	12"
HP12×53	14"	12¾"	14"	14"	14"	14"
HP14×73	16"	14"	16"	16¼"		14"

Helical Corrugated Pipe Shell

CONCRETE PILES

PIPE PILE	EQUIVALENT CONCRETE PILES					
	Precast	Fluted	Step Taper	Pre-stressed	#	
10¾"	12"	12"	12¼"	12"	12¼"	
12¾"	14"	14"	14¼"	14"	14"	
14"	16"	16"	16¼"		14"	

GENERAL NOTES ——

1. Specifications:
Standard Specifications for State Road and Bridge Construction as currently used by the Kansas Dept. of Transportation. (Ed. 1980).
2. Concrete:
Concrete for cast-in-place shall be f'c = 3,000 p.s.i. See Sub-Article 703.07 (f)(2) Standard Specifications.
Concrete for Precast shall be f'c = 4,000 p.s.i. Concrete for Prestressed f'c = 5,000 p.s.i. See Article 703.07 (a) Standard Specifications.
3. Reinforcement:
Reinforcing bars shall be new billet steel A.S.T.M. Designation A-615 grade 40 without exception. Hoops and spirals may be either plain or deformed bars. See Sub-Section 1601 Standard Specifications.
4. Precast Piles:
Precast piles shall conform to the requirements of Article 703.07 (a)(b)(c)(d) Standard Specifications.
5. Cast-in-Place Shells:
Steel shells for Cast-in-Place Concrete Piles shall conform to the requirements of Sub-Section 1606 Standard Specifications.
All piles driven without mandrel shall be of the minimum gages or thicknesses shown above, except fluted pile use No. 9 gage minimum. Piles driven with mandrel shall be of sufficient strength and thickness to withstand driving without injury and to resist harmful distortion and/or buckling due to soil pressure after the mandrel is removed.
Improperly driven, broken or otherwise defective shells shall be removed and replaced or otherwise corrected to the satisfaction of the Engineer, or the driving of an additional pile at no extra cost.
The contractor shall maintain on the job at all times prior to and during the filling of the shells, a light suitable for visual inspection of the pile.
6. Steel Pile:
Steel pile shall conform to requirements of Article 1604 (e) Standard Specifications.
7. Pile Points:
Pile points shall conform to the dimensions shown and requirements of Sub-Article 1606 (b)(3) Standard Specification. Pile points shall be mill welded to pile.
8. Welding:
All field welding shall meet the requirements of Sub-Section 703.06 Standard Specifications.
9. Paint:
All paint shall comply with Sub-Section 1806 Standard Specifications, or as specified on the plans.
10. Test Piles:
Test Piles shall be driven where called for on the Bridge plans. The test piles located within the limits of the substructure will become a part of the Bridge Pile System.
11. Splices:
Splices for Steel Piles and Shell Piling shall be in accordance with details shown on this sheet and shall comply with Sub-Section 703.06 Standard Specifications.
Precast Concrete Pile splices shall comply with Sub-Article 703.07(g)(1) Standard Specifications.
Prestressed Concrete Pile splices shall be made in accordance with the manufacturers recommendations subject to the approval of the Engineer.
12. Driving Formula:
Driving formula shall conform to Sub-Article 703.04 (d.)(3) Standard Specifications.
13. Mill Test Reports:
Steel Piles test reports shall comply with Sub-Article 1604 (e.)(3) Standard Specifications.
Steel Shells test reports for cast-in-place piles shall comply with Article 1606 (d.) Standard Specifications.
14. Measurement and Payment:
Measurement for all piles shall comply with Sub-Section 703.08 Standard Specifications.
Payment for all piles shall comply with Sub-Section 703.09 Standard Specifications.

NO.	DATE	REVISIONS	BY	APP'D
9	6-7-80	Revised for 1980 Const. Spec.	W.J.N.	E.E.W.
8	8-19-76	Revised Concrete Strength	K.F.H.	E.E.W.
7	10-22-75	Revised from S.H.C. TO K.D.O.T.	G.F.K.	E.E.W.
6	9-4-73	Revised For 1973 Const Spec.	G.F.K.	E.E.W.
5	8-26-66	Revise Entire Gen Note	J.C.L.	E.E.W.
4	4-8-64	Add Longitudinal Welded Pipe Pile	J.C.L.	T.W.O.
3	4-4-61	Revise Choice of Pile Note Above.	J.C.L.	T.W.O.
2	3-27-61	Revise Pipe Pile General Note	J.C.L.	T.W.O.
1	1-24-61	Remove hole in Prestressed Cap Plate	J.C.L.	T.W.O.

KANSAS DEPARTMENT OF TRANSPORTATION

STANDARD PILE DETAILS 13/15

STD. NO. 102

SHEET NO. OF	SCALE	APP'D
DESIGNED	DETAILED	QUANTITIES
DESIGN CK	DETAIL CK	QUAN. CK.
		TRACED Koci
		TRACE CK

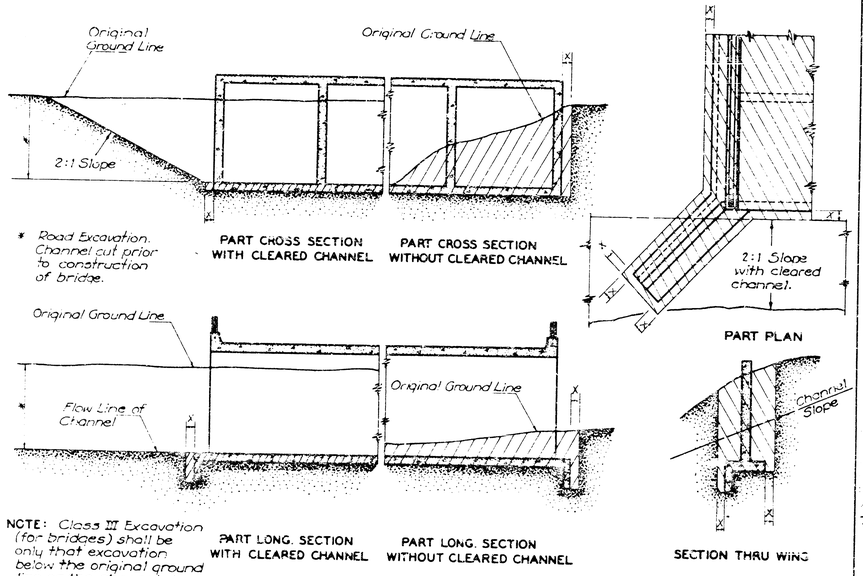

EXCAVATION DETAILS FOR TYPICAL MULTIPLE BOX

Sides of trenches in hard or compacted soil including embankments shall be shored, sheeted, braced or otherwise supported when the trench is more than 5 feet in depth and 8 feet or more in length. In lieu of the shoring, the sides of the trench above the 5 foot level may be sloped to preclude collapse. The slope for average soils shall be 1:1. If the angle of repose of the soil is less, flatter slopes shall be required.

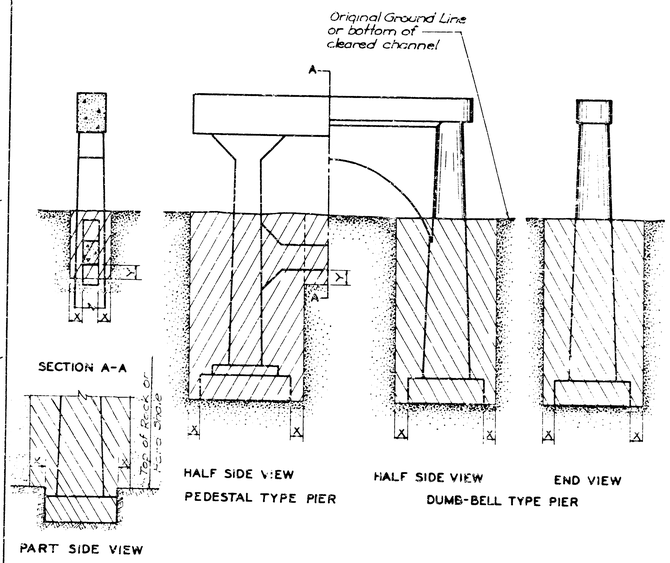

NOTE: When Rock or Hard Shale is encountered all excavation below top of this material shall be to neat lines.

EXCAVATION DETAILS FOR TYPICAL PIERS

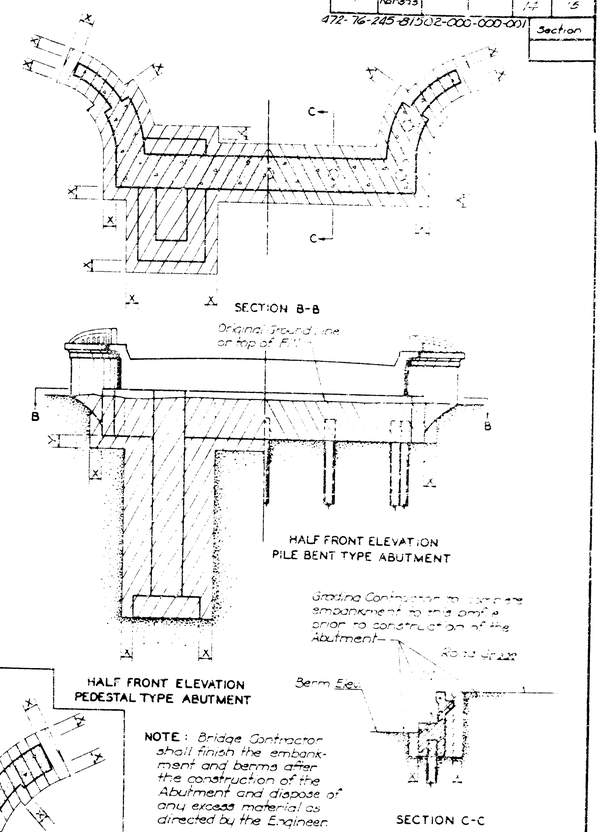

NOTE: Bridge Contractor shall finish the embankment and berms after the construction of the Abutment and dispose of any excess material as directed by the Engineer.

EXCAVATION DETAILS FOR TYPICAL ABUTMENTS

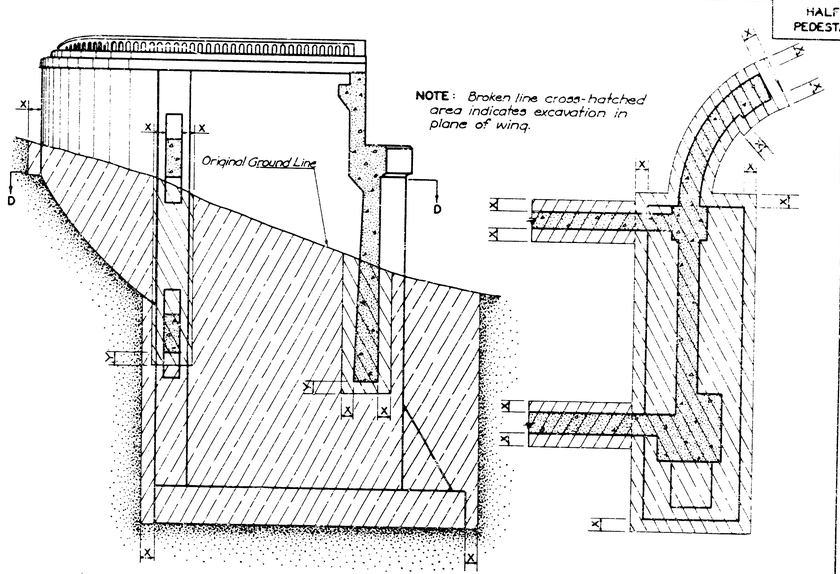

EXCAVATION DETAILS FOR TYPICAL U-ABUTMENTS

NOTE: All bridge excavation shall be computed on the basis of the cross-hatched areas and boundary lines indicated on this sheet.
Dimension 'X' shall be 2'-0" unless indicated otherwise on the general plans.
Dimension 'Y' shall be 1'-6" unless indicated otherwise on the general plans.

Fed. Aid Proj. No.	State	Proj. No.	Fiscal Year	Sheet No.	Total Sheets
7	Kansas			14	15

472-76-245-81302-000-000-001

Section

NO.	DATE	REVISIONS	BY	APP'D
8	6.14	Revised "X" Dimension	W.L.A.	P.L.A.

KANSAS DEPARTMENT OF TRANSPORTATION

BRIDGE EXCAVATION

STD. NO. 100.1 SCALE 1" = 1'-0" (For 22"x36" sheet)

DESIGNED BY E.A.R. DATE 6-25 DETAILED BY W.A.B. TRACED BY W.A.B.

CHECKED BY C.T. APPROVED BY [signature] DATE 4.0.84

FHWA Reg No	State	Proj No	Fiscal Year	Sheet No	Total Sheets
7	Kansas			15	15

472-76-245-81502-000-000-01 | Section

TYPICAL SUPERSTRUCTURE DETAILS

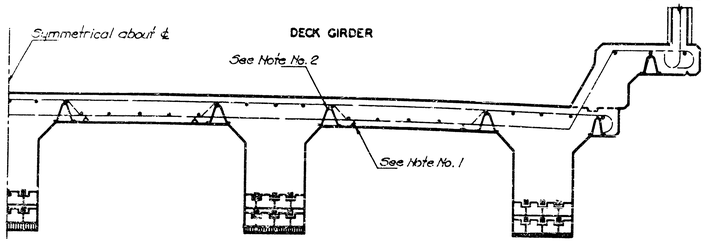

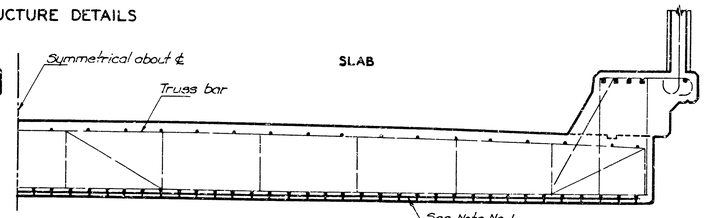

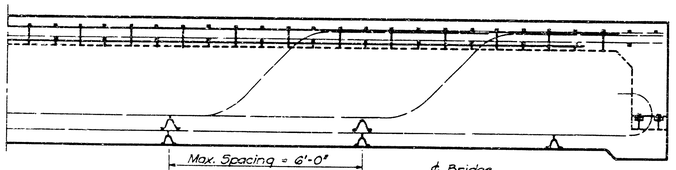

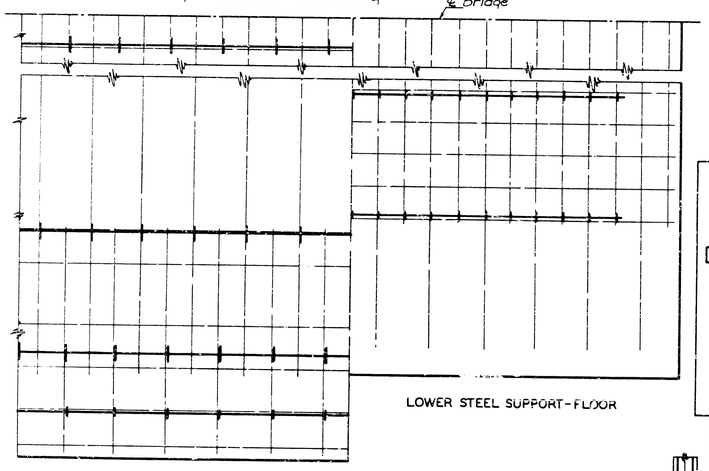

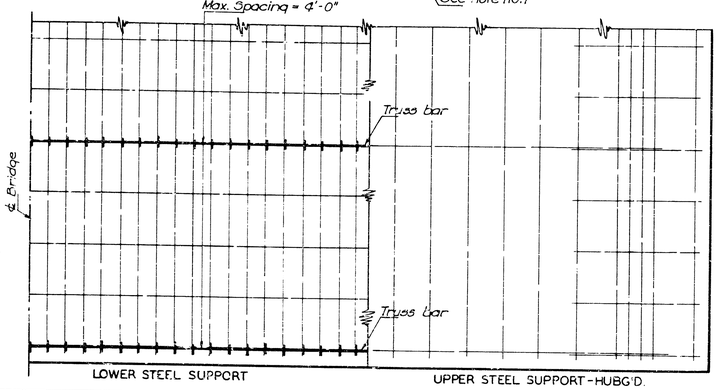

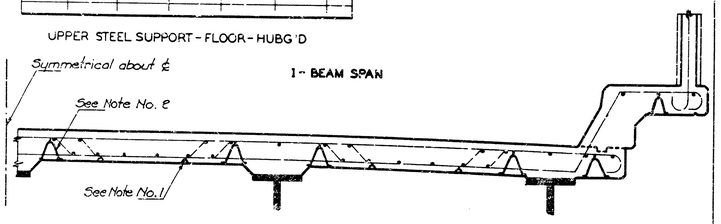

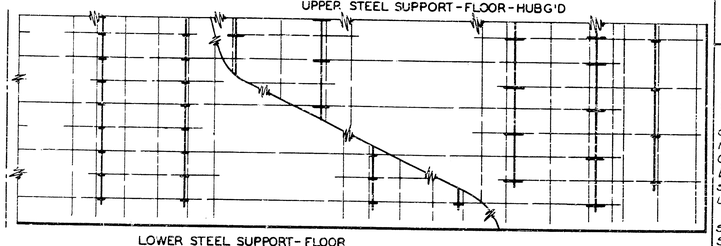

TYPICAL SUBSTRUCTURE DETAILS

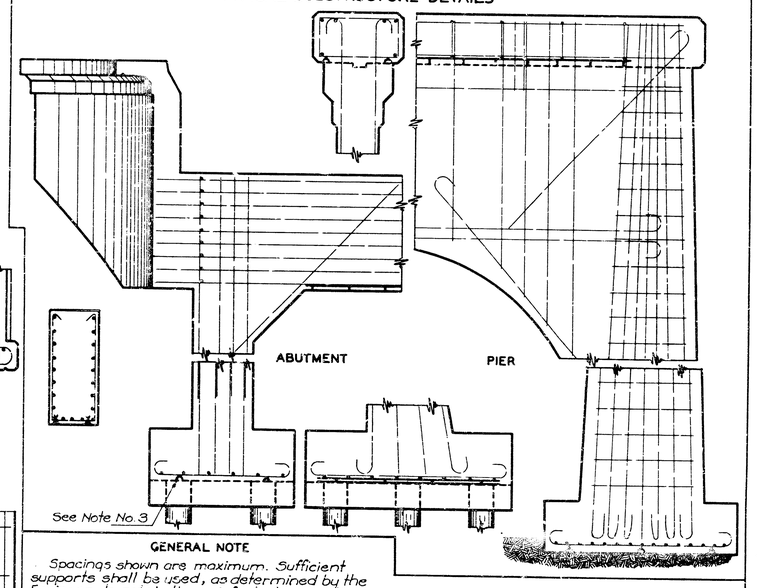

GENERAL NOTE

Spacings shown are maximum. Sufficient supports shall be used, as determined by the Engineer, to retain the reinf. steel in position.

Approved designs and arrangements of Supports or Spacers other than as shown on this sheet, may be used with the permission of the Engineer. Component parts of Supports and Spacers shall be securely welded at all contact points. Legs shall be so constructed that only the ends bear upon the forms.

Wire used for Supports and Spacers shall be of sufficient size to insure stability of Reinforcing Steel at the position shown on the Plans, within the limits indicated by Notes 1 & 2. Wire supports shall be supplemented with form ties or other approved devices where necessary.

NOTE 1: The lower side of Reinforcing Steel in these locations shall be not less than one inch (1") from the surface of the concrete.

NOTE 2: The upper side of Reinforcing Steel in these locations shall be within the limits shown on the Plans.

NOTE 3: The use of Wire Supports for Reinforcing Steel in these locations is optional. Where they are not used the Steel shall be supported from the forms by means of wire ties or saddles.

BEAM BAR SPACERS & BOLSTERS

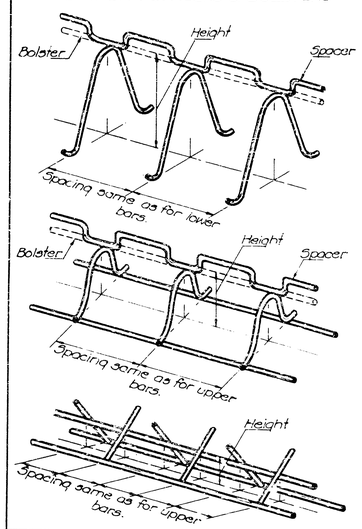

TYPICAL CULVERT DETAILS

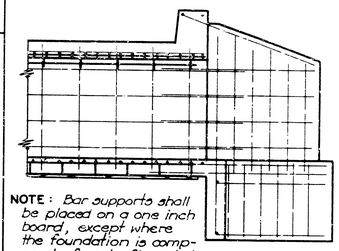

NOTE: Bar supports shall be placed on a one inch board, except where the foundation is composed of rock, firm shale or a seal course. See Note No. 3.

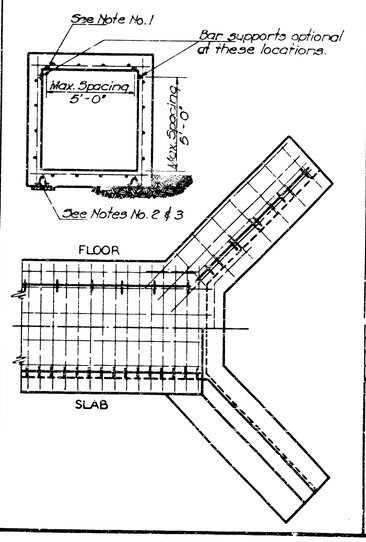

LOW SLAB BAR SPACERS & BOLSTERS

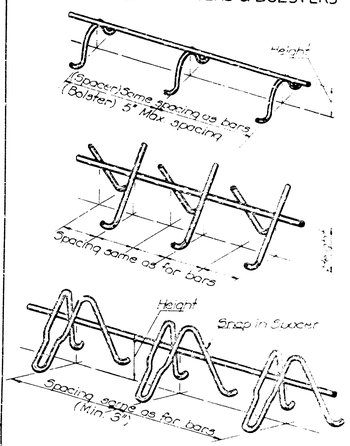

HIGH SLAB BAR SPACERS & BOLSTERS

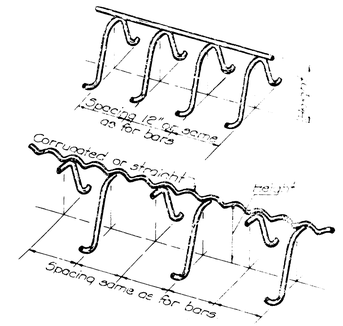

INDIVIDUAL HIGH BAR CHAIRS

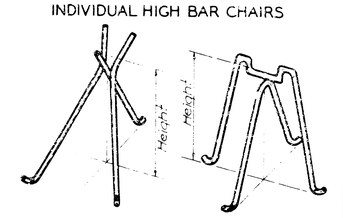

NO	DATE	REVISIONS	BY	APP'D
6				

KANSAS DEPARTMENT OF TRANSPORTATION

SUPPORTS AND SPACERS FOR REINFORCING STEEL

15/8

STD. NO. 610 SCALE No Scale

DESIGNED BY E.A.R. DATE 7-63 DETAILED BY W.A.B. TRACED BY W.A.B.

CHECKED BY G.T. APPROVED BY E.A. Linscott DATE 4-17-64

15A/15

Sheets 15A, 15B & 15C are for Right-of-Way Information only.

P.I. Elev. 140.00 250' V.C.

P.I. Elev. 142.10 90' V.C.

Walk Gr. +0.21'

-2.5629%

+0.6246%

+0.6889%

+1.5556%

95'℄

Temp. Construction Easement 80'℄

Limits of Construction

Begin Taper

End Taper

Remove 55'x34'x11'6" M.A.C.

2 Ungd. Tel. Cables

Adjust to El. 142.72

Bell Tel. M.H.

143.63

142.30 Vault

WEST CENTRAL AVENUE

50' R/W

48' f-f

30' f-f

FL. 140.40

16" A.C. Water Line

4' Walk

4" Arkla Gas Line

Complete Access Control

15' Utility Easmt

San. S. MH.

8" San. Sewer

House

Drainage Easement

Owner: Swanson, Inc.

℄ 135.0

4' DI

-2.5619%

-0.9174%

P.I. Elev. 141.54 130' V.C.

Asphalt

KARREN LANE

Construct Wheelchair Ramps

Remove 24'x42' C.M.P.

Limits of Construction ℄ 135.0

Saw & Match

2-10" Walnut

10" Walnut

15" Walnut

36" Cttnwd.

Gate Post

Fence

Arkla Gas Line

+0.6241%

Walk Gr. +0.21'

Temp. Construction Easement 90'℄

P.I. Elev. 142.10 90' V.C.

B.M. 136.48 R.R. spk. in 8" Elm tree 25' E. & 82' S. of ℄'s Karren Lane & W. Central Ave.

WEST CENTRAL AVENUE

PLAN VII

CITY OF WICHITA PROJ. NO. 472-76-245-81096-000-000-001

Booker/Freund Engineers Architects Planners

SCALE 1"=20' | DATE | DWG. NO. 89-NP-9

CKD. APP. TR. DR. DES. PLOT. SURV.

16/18

Bars — Abutments Pier Det - A Abu- - P Pier Details — Superstructure - 1B Pier) - Pier Details - Pier Beams Prestressed - Bar List

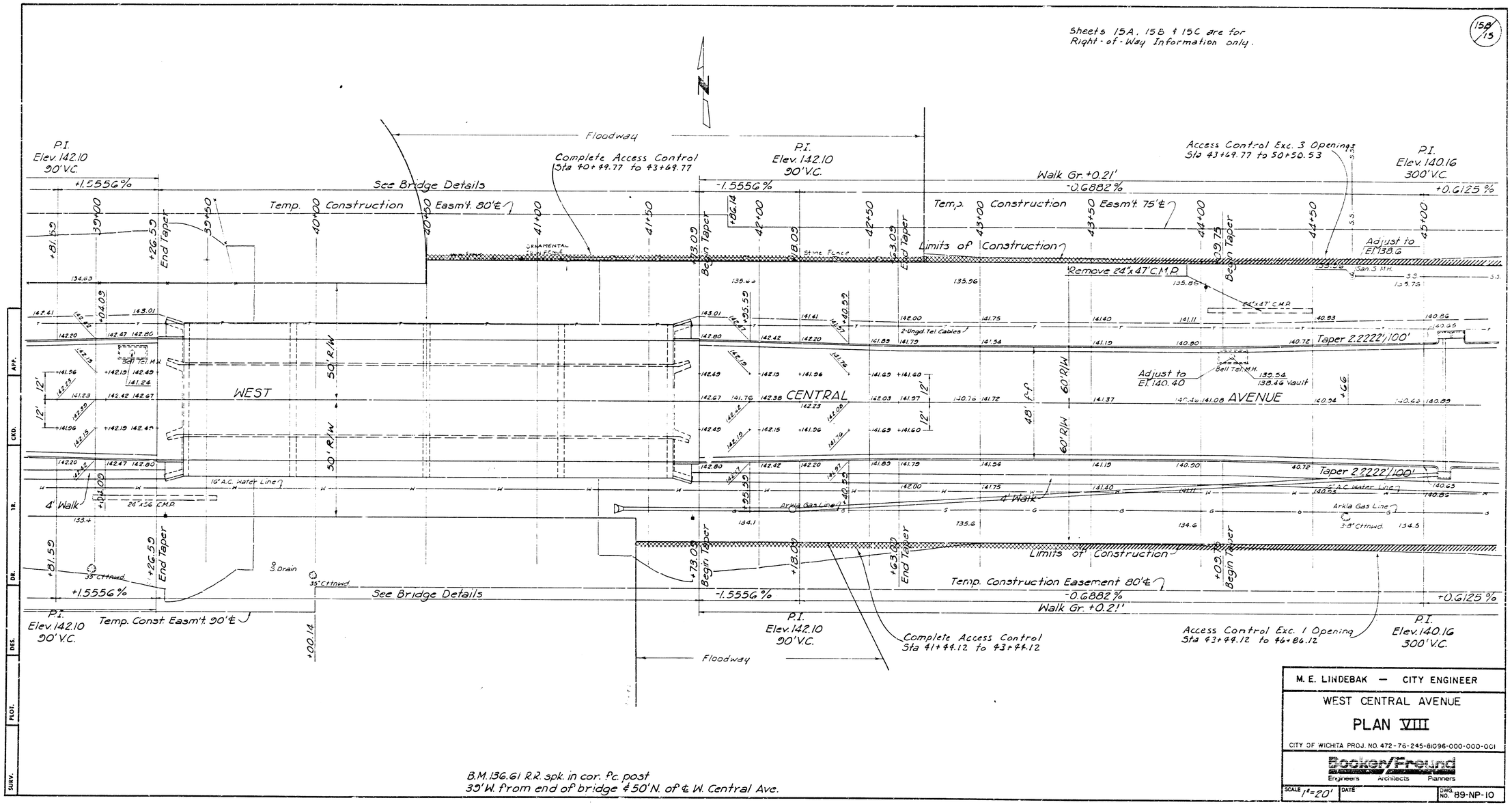

Sheets 15A, 15B & 15C are for Right-of-Way Information only.
15B/15
Floodway
P.I. Elev. 142.10 90' V.C.
+1.5556%
See Bridge Details
Temp. Construction Easm't. 80'℄
Complete Access Control Sta 40+49.77 to 43+69.77
P.I. Elev. 142.10 90' V.C.
-1.5556%
Walk Gr. +0.21'
-0.6882%
Temp. Construction Easm't. 75'℄
Access Control Exc. 3 Openings Sta 43+69.77 to 50+50.53
P.I. Elev. 140.16 300' V.C.
+0.6125%
Limits of Construction
Adjust to El. 138.6
Remove 24"x47' C.M.P.
Taper 2.2222'/100'
Adjust to El. 140.40
WEST CENTRAL AVENUE
50' R/W
60' R/W
48' f-f
4' Walk
16" A.C. Water Line
Arkla Gas Line
Temp. Construction Easement 80'℄
Temp. Const. Easm't. 90'℄
Complete Access Control Sta 41+44.12 to 43+44.12
Access Control Exc. 1 Opening Sta 43+44.12 to 46+86.12
B.M. 136.61 R.R. spk. in cor. f.c. post 39' W. from end of bridge & 50' N. of ℄ W. Central Ave.
M. E. LINDEBAK — CITY ENGINEER
WEST CENTRAL AVENUE
PLAN VIII
CITY OF WICHITA PROJ. NO. 472-76-245-81096-000-000-001
Booker/Freund
Engineers Architects Planners
SCALE 1"=20'
DATE
DWG. NO. 89-NP-10

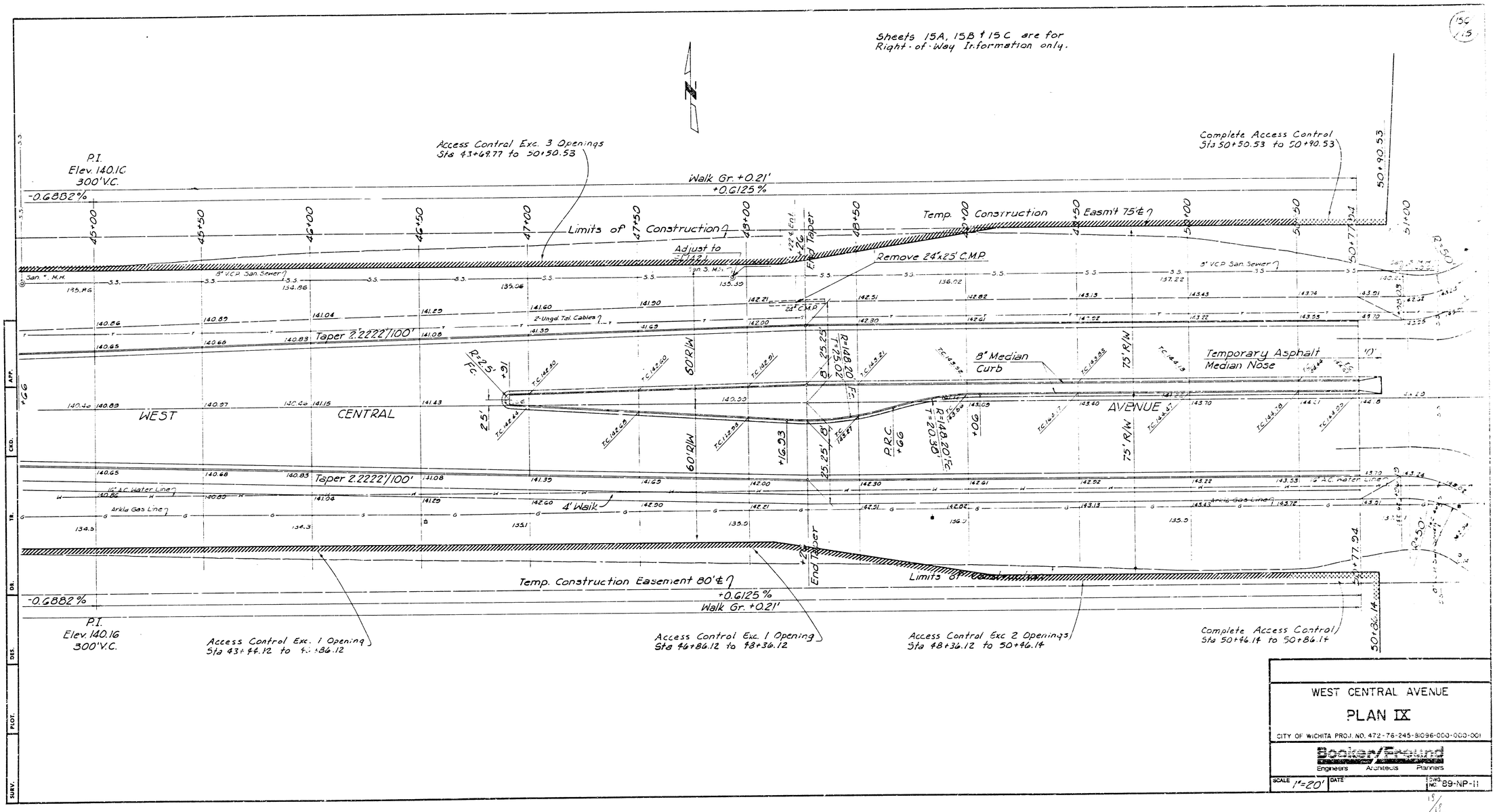

WEST CENTRAL AVENUE

PLAN IX

CITY OF WICHITA PROJ. NO. 472-76-245-81096-000-000-001

Booker/Freund
Engineers Architects Planners

SCALE 1"=20' DATE DWG. NO. 89-NP-11