SHEET NO.	TOTAL SHEETS
1	8

CITY OF WICHITA, KANSAS
MICHAEL E. LINDEBAK, P.E., CITY ENGINEER

13TH STREET DECEL LANE

TO SERVE
WICHITA REHABILITATION HOSPITAL
LOTS 1 AND 2, BLOCK 1

NORTHWEST VILLAGE 5TH ADDITION
CITY OF WICHITA PROJECT NO. 472-76-245-82065-000-000-001
INDEX NO. 761213

INDEX OF SHEETS

1. TITLE SHEET
2. TYPICAL SECTION AND MISC. DETAILS
3. PLAN
4. STD. TYPE 1 CURB INLET DETAILS
5. MANHOLE FRAME AND COVER DETAIL
6.-8. CROSS SECTIONS

PROJECT SURVEY CONTROL

VERTICAL DATUM: CITY OF WICHITA DATUM

B.M. #1 : CHISELED "O" ON SOUTH SIDE CONCRETE LIGHT POLE BASE ON SOUTH SIDE "GODFATHER'S PIZZA". ELEV.=166.52

B.M. #2 : TOP OF STEEL FRAME AT ℄ NORTH END OF AREA INLET AT 50'± SSE OF S.W. CORNER OF BUILDING. ELEV.=163.59

EARTHWORK

EXCAVATION 690.0* CU. YDS.
LENGTH OF PROJECT SECTION LIN. FT.

* THIS QUANTITY COMPUTED USING BASE BID-ALTERNATE 1 CONFIGURATION

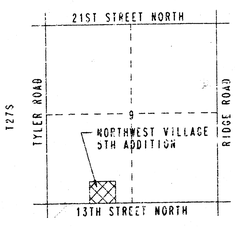

VICINITY MAP

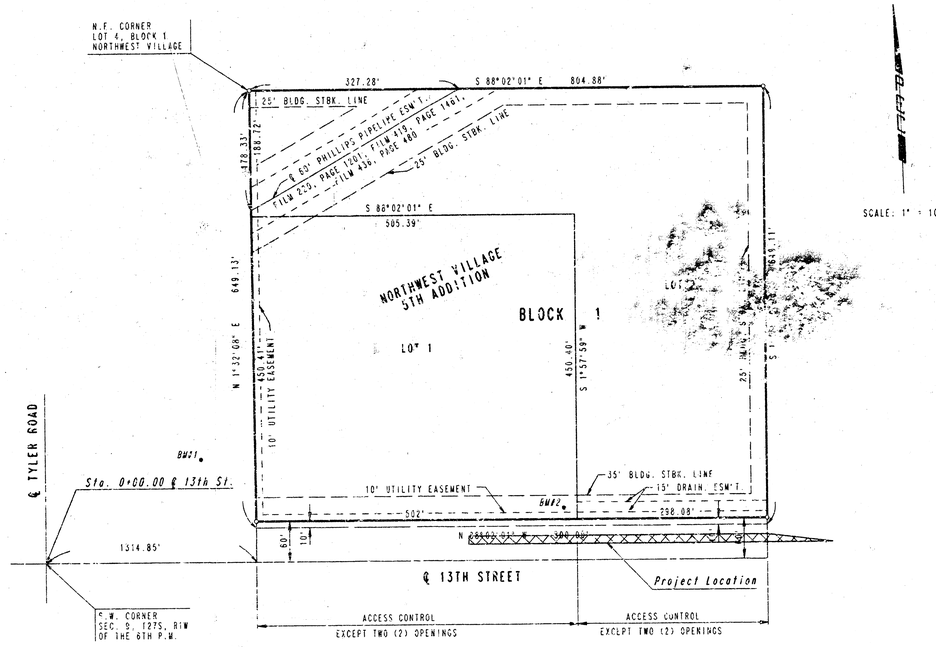

SCALE: 1" = 100'

GENERAL NOTES

UNDERGROUND UTILITY SERVICE LINES AND OVERHEAD UTILITY POLE LINES ARE TO BE ADJUSTED AS NECESSARY BY OTHERS PRIOR TO CONSTRUCTION UNLESS THE PLANS SPECIFICALLY CALL FOR THEIR ADJUSTMENT BY THE CONTRACTOR. EXISTING UTILITIES AND THEIR LOCATION, AS SHOWN ON THE PLANS, REPRESENT THE BEST INFORMATION OBTAINABLE FOR DESIGN. LOCATION INFORMATION HAS BEEN OBTAINED FROM THE VARIOUS UTILITY COMPANIES AND IS EITHER FROM COMPANY RECORD DRAWINGS OR COMPANY PROVIDED FIELD LOCATIONS. THE CONTRACTOR WILL BE REQUIRED TO WORK AROUND EXISTING UTILITIES WITHIN THE RIGHT-OF-WAY WHICH DO NOT CONFLICT WITH PROPOSED CONSTRUCTION.

RUBBLE FROM THE REMOVAL OF MISCELLANEOUS STRUCTURES AND EXCESS EXCAVATION WHICH IS TO BE WASTED SHALL BE DISPOSED OF ON SITES TO BE PROVIDED BY THE CONTRACTOR AND APPROVED AS NOTED BELOW.

ALL DISPOSAL SITES MUST BE APPROVED BY THE KANSAS DEPARTMENT OF HEALTH AND ENVIRONMENT. MATERIAL EITHER STOCKPILED OR DISPOSED OF IN A FLOOD PLAIN WOULD REQUIRE A KANSAS STATE BOARD OF AGRICULTURE PERMIT. ANY MATERIAL DUMPED IN WATERS OF THE UNITED STATES OR WETLANDS IS SUBJECT TO U.S. CORPS OF ENGINEERS PERMITTING REGULATIONS. ANY MATERIAL BURIED OR STOCKPILED BEYOND APPROVED CONSTRUCTION LIMITS WOULD REQUIRE ADDITIONAL ARCHEOLOGICAL INVESTIGATIONS UNLESS BURIED IN A PREVIOUSLY APPROVED BORROW LOCATION.

CONTRACTOR SHALL SATISFY HIMSELF OF SUBSURFACE CONDITIONS PRIOR TO CONSTRUCTION.

CONTRACTOR SHALL PROVIDE A MINIMUM FORTY-EIGHT (48) HOUR ADVANCE NOTICE (EXCLUDING WEEKENDS AND HOLIDAYS) PRIOR TO BEGINNING ANY EXCAVATION, TO KANSAS ONE-CALL SYSTEM, A UTILITY LOCATION SERVICE, AT (316) 687-2470 TO REQUEST THE FOLLOWING UTILITY COMPANIES TO LOCATE ALL EXISTING LINES WITHIN THE PROJECT AREA: KPL/GAS SERVICE, ARKLA GAS, K.G.&E., SOUTHWESTERN BELL TELEPHONE, MULTIMEDIA CABLEVISION, CITY OF WICHITA SEWER MAINTENANCE AND CITY OF WICHITA WATER DEPARTMENT.

THE CONTRACTOR SHALL BE RESPONSIBLE FOR PRESERVING PROPERTY IRONS. THE CONTRACTOR WILL BE REQUIRED TO RE-ESTABLISH ANY PROPERTY IRONS WHICH ARE DAMAGED OR DESTROYED BY HIS CONSTRUCTION OPERATIONS. SUCH IRONS SHALL BE RE-ESTABLISHED BY A LICENSED LAND SURVEYOR IN ACCORDANCE WITH STATE LAWS.

THE WATER DEPARTMENT SHALL FIELD LOCATE WATER VALVES ONE TIME DURING CONSTRUCTION WHEN REQUESTED BY THE CONTRACTOR. IT SHALL BE THE CONTRACTOR'S RESPONSIBILITY TO PRESERVE SUCH FIELD LOCATIONS DURING THE CONSTRUCTION PROCESS. WATER VALVES, WATER VALVE BOXES OR FIRE HYDRANTS DAMAGED DURING CONSTRUCTION SHALL BE REPAIRED BY THE CONTRACTOR AT HIS OWN EXPENSE.

THIS PROJECT DOES NOT INCLUDE ANY PROVISIONS FOR CONSTRUCTION OF DRIVEWAYS.

LANDSCAPING AND UNDERGROUND SPRINKLER SYSTEMS ARE PRESENT WITHIN THE PROJECT LIMITS IN LOT 1. THE CONTRACTOR SHALL REMOVE THESE ITEMS AS NECESSARY FOR CONSTRUCTION, THEN RESTORE THEM TO PRE-CONSTRUCTION CONDITION AS APPROVED BY THE ENGINEER AND THE OWNER AND/OR THEIR AGENT. THE CONTRACTOR MAY WISH TO CONTACT SUNRISE LAWN SERVICE (MR. JAMES RAWSEY) @ 832-1367 FOR ASSISTANCE IN RESTORATION OF THE LANDSCAPING AND SPRINKLERS. OTHER DISTURBED AREAS WITHIN THE PROJECT LIMITS SHALL BE SEEDED, FERTILIZED, AND MULCHED IN ACCORDANCE WITH CITY OF WICHITA STANDARD SPECIFICATIONS. ALL COSTS ASSOCIATED WITH REMOVAL AND REPLACEMENT OF LANDSCAPING AND SPRINKLERS, AND SEEDING, FERTILIZING AND MULCHING SHALL BE INCLUDED IN THE LUMP SUM BID ITEM "SITE RESTORATION".

TRAFFIC IS TO BE MAINTAINED THROUGH CONSTRUCTION OF THIS PROJECT. TRAFFIC CONTROL SHALL BE THE RESPONSIBILITY OF THE CONTRACTOR AND SHALL BE SUBSIDIARY TO OTHER BID ITEMS. ALL BARRICADES, SIGNS, LIGHTS, AND OTHER PROTECTIVE DEVICES SHALL BE INSTALLED AND MAINTAINED IN CONFORMITY WITH THE LATEST EDITION OF THE CITY OF WICHITA BARRICADE MANUAL. SEE SPECIFICATIONS FOR ADDITIONAL INFORMATION.

THIS PROJECT ALTERNATE PAVEMENT TYPE: THE CONTRACTOR SHALL BID ALL ALTERNATE 1 AND ALTERNATE 2 BID ITEMS AND THE CITY ENGINEER SHALL THEN SPECIFY WHICH PAVEMENT TYPE IS TO BE USED FOR THIS PROJECT. THE ALTERNATE SELECTED BY THE CITY ENGINEER SHALL BE USED FOR THE ENTIRE PROJECT. CROSS SECTIONS AND EARTHWORK QUANTITIES CONTAINED HEREIN REFLECT ALTERNATE 1 CONFIGURATION. ANY DIFFERENCE IN EARTHWORK BETWEEN THE TWO ALTERNATES SHALL BE SUBSIDIARY TO SUBGRADE MANIPULATION.

THE CONTRACTOR SHALL GIVE ALL PROPERTY OWNERS AND/OR TENANTS OF DEVELOPED PROPERTY ABUTTING THE PROJECT LIMITS A MINIMUM OF TEN (10) DAYS ADVANCE NOTICE PRIOR TO START OF CONSTRUCTION.

BRIAN D. BOUTWELL LICENSED 10869 KANSAS PROFESSIONAL ENGINEER

Sw/s Booked
3-8-94
MCG
C-71

DRAWING NAME: 13SDP142 RENAB TITLE
LOCATION: C:\ENGLISH\13SDP
CENTER COORDINATES:
ROTATION ANGLE:
SCALE: 1=1 WORKING ON
DATE LAST SAVED ON:
SPECIAL INSTRUCTIONS:

JUNE 1992

PLANS PREPARED BY
PROFESSIONAL ENGINEERING CONSULTANTS, P.A.
ENGINEERS
WICHITA, KANSAS

PROJECT NO.	SHEET NO.	TOTAL SHEETS
472-76-245-82045-000-000-001	2	8

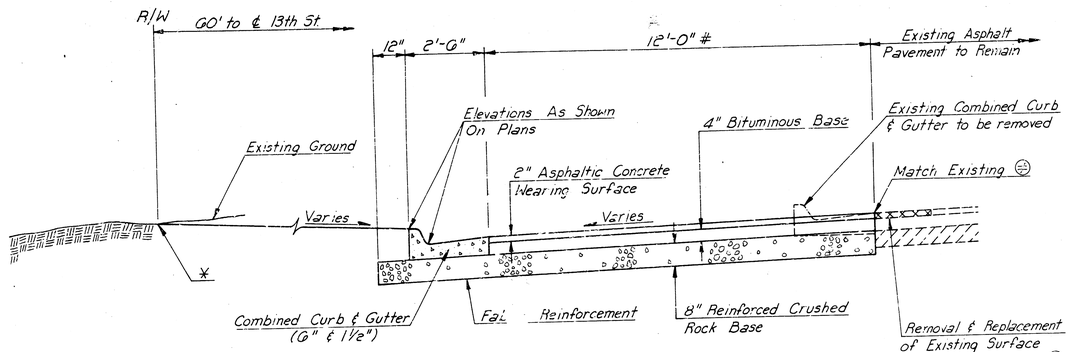

FABRIC BASE REINFORCEMENT SHALL BE BX 1100 GEOGRID AS MANUFACTURED BY TENSAR CORPORATION OR APPROVED EQUAL. FABRIC BASE REINFORCEMENT SHALL BE INSTALLED IN ACCORDANCE WITH MANUFACTURES RECOMMENDATIONS.

ROCK BASE IS TO BE COMPACTED AND SMOOTHED WITH A STEEL FACED ROLLER PRIOR TO PLACEMENT OF ASPHALT. TACK COAT WILL NOT BE APPLIED TO ROCK BASE

CRUSHED ROCK GRADATION REQUIREMENTS
PERCENT OF AGGREGATE RETAINED

2-1/2"	0
3/4"	20-50
#4	50-80
#40	80-94
#200	90-98

ROCK QUALITY SHALL CONFORM TO THE REQUIREMENTS SPECIFIED BY THE KDOT 1990 EDITION STANDARD SPECIFICATION SUBSECTION 1107 FOR DURABILITY CLASS 1.

Varies Sta 16+50 to Sta 17+00 and Sta 21+14.48 to Sta 22+14.48 See Plan

* Match Existing at R/W, except see X-Sections for Variation Sta 18+00 to Sta 18+75

TYPICAL SECTION
ALTERNATE NO. 1

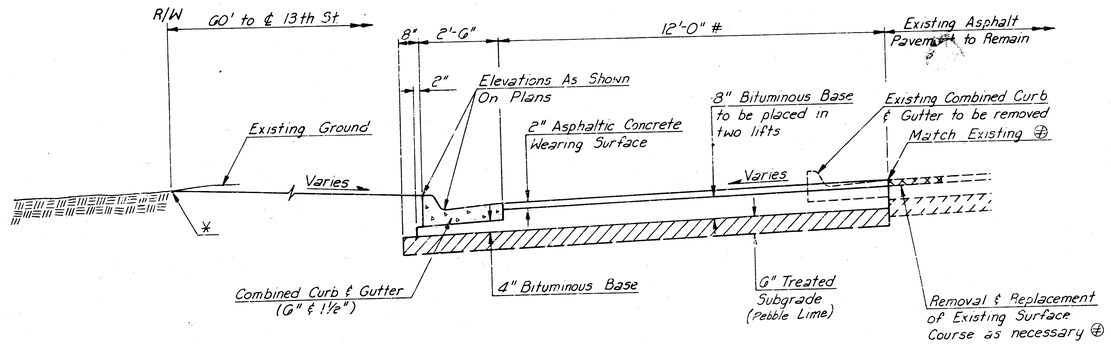

TYPICAL SECTION
ALTERNATE NO. 2

GENERAL NOTES

A TACK COAT OF EMULSIFIED ASPHALT (SC-1H OR CSS-1H) SHALL BE APPLIED AT AN APPROXIMATE RATE OF 0.05 GALLONS PER SQUARE YARD BETWEEN EACH LIFT OF ASPHALTIC MATERIAL.

BITUMINOUS BASE AND ASPHALTIC CONCRETE WEARING SURFACE SHALL BE PLACED WITH A LAYDOWN MACHINE HAVING AUTOMATIC CONTROLS FOR LINE AND GRADE.

CONSTRUCTION JOINTS IN EACH LIFT SHALL BE STAGGERED A MINIMUM DISTANCE OF ONE (1) FOOT FROM JOINTS IN PRECEDING LIFTS.

~~CONTRACTOR TO BID ONLY ONE SUBGRADE TREATMENT ALTERNATIVE WHEN ALTERNATES ARE PROVIDED IN THE PROPOSAL AND CONTRACT. THE ALTERNATE CHOSEN BY THE SUCCESSFUL BIDDER SHALL BE USED IN CONSTRUCTING THIS PROJECT.~~

℄ A NEAT VERTICAL CONTACT PLANE SHALL BE PROVIDED BETWEEN THE EXISTING ASPHALT PAVEMENT AND THE NEW 2" ASPHALTIC CONCRETE WEARING SURFACE. SHOULD THE EXISTING EDGE OF PAVEMENT AT THE TIME OF PLACEMENT OF THE NEW 2" ASPHALTIC CONCRETE WEARING SURFACE NOT BE VERTICAL, THE CONTRACTOR SHALL SAW, CUT, OR BY OTHER MEANS ACCEPTABLE TO THE ENGINEER PROVIDE A NEAT VERTICAL CONTACT PLANE. SAWING, CURING, OR OTHER WORK REQUIRED TO PROVIDE THE VERTICAL CONTACT PLANE AND ALL ADDITIONAL LABOR, MATERIALS, AND INCIDENTALS SHALL BE CONSIDERED SUBSIDIARY TO OTHER SURFACING ITEMS.

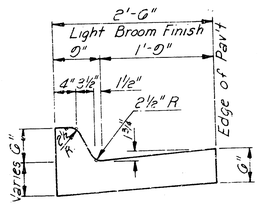

COMBINED CURB & GUTTER (6" & 1 1/2")

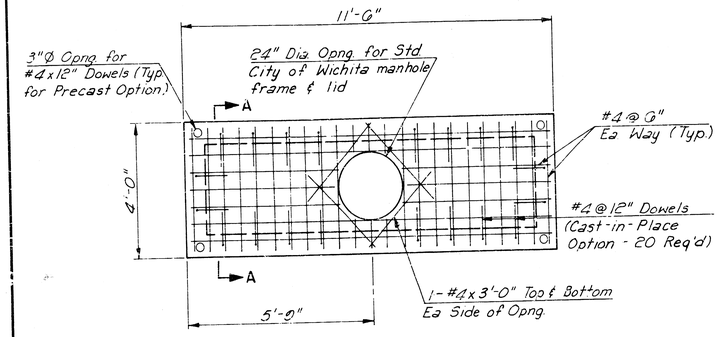

PLAN
(CAST-IN-PLACE OR PRECAST)

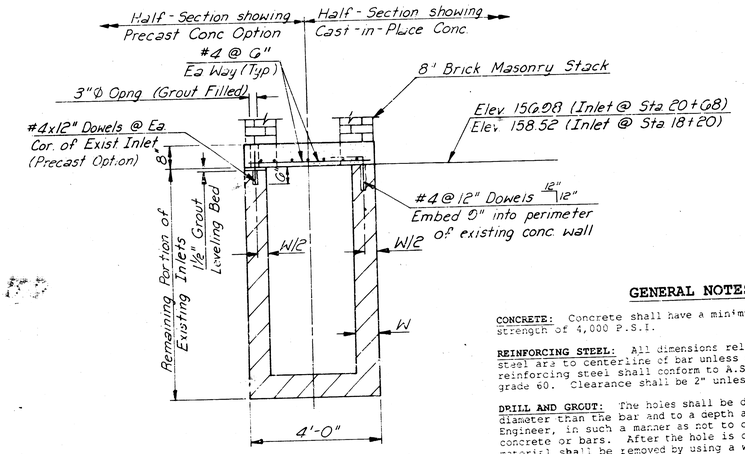

TYPICAL INLET SECTION "A"

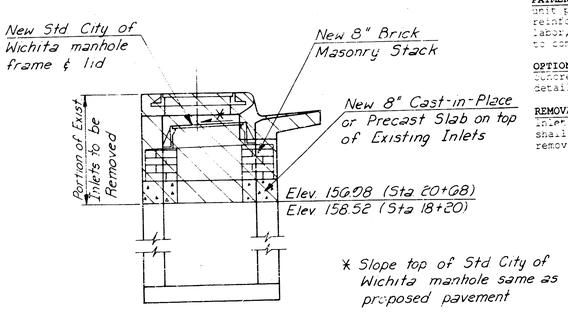

* Slope top of Std City of Wichita manhole same as proposed pavement

EXISTING INLET SECTION

GENERAL NOTES

CONCRETE: Concrete shall have a minimum 28 day compressive strength of 4,000 P.S.I.

REINFORCING STEEL: All dimensions relative to reinforcing steel are to centerline of bar unless otherwise noted. All steel and to conform to A.S.T.M. designation A615 grade 60. Clearance shall be 2" unless otherwise noted.

DRILL AND GROUT: The holes shall be drilled 1/4" larger in diameter than the bar and to a depth as directed by the Engineer, in such a manner as not to damage adjacent concrete or bars. After the hole is drilled, all loose material shall be removed by using a wire brush to free the material and dust from the side of the hole and then vacumed to remove dust from the side of the hole and then vacumed to remove material and dust. The hole will be filled 1/3 to 1/2 full of epoxy grout and the bar inserted. The hole shall be filled to 1/4" from the top of the hole. The epoxy grout shall be mixed, applied and cured according to manufacturers recommendations

PAYMENT: The "Inlet Modification" shall be paid for at the unit price bid per each in place including concrete, reinforcing, steel, and all other miscellaneous materials, labor, tools, equipment and incidentals necessary to complete the work.

OPTIONS: Cast-in-place concrete is shown with precast concrete option indicated. Contact Engineer for further details if precast option is utilized.

REMOVAL: The Contractor shall remove portions of existing inlet as shown on plans. All materials from existing inlet shall become the property of the Contractor and shall be removed from the site.

WICHITA REHABILITATION HOSPITAL
DECEL LANE

TYPICAL SECTION & MISCELLANEOUS DETAILS

PROFESSIONAL ENGINEERING CONSULTANTS, P.A.
ENGINEERS
WICHITA, KANSAS

Designed by	B.D.B.	Checked by	
Drawn by	D.J.L.	Date MAY, 1992	Job No. 92142

PROJECT NO.	SHEET NO.	TOTAL SHEETS
472-76-245-62065-000-000-001	3	8

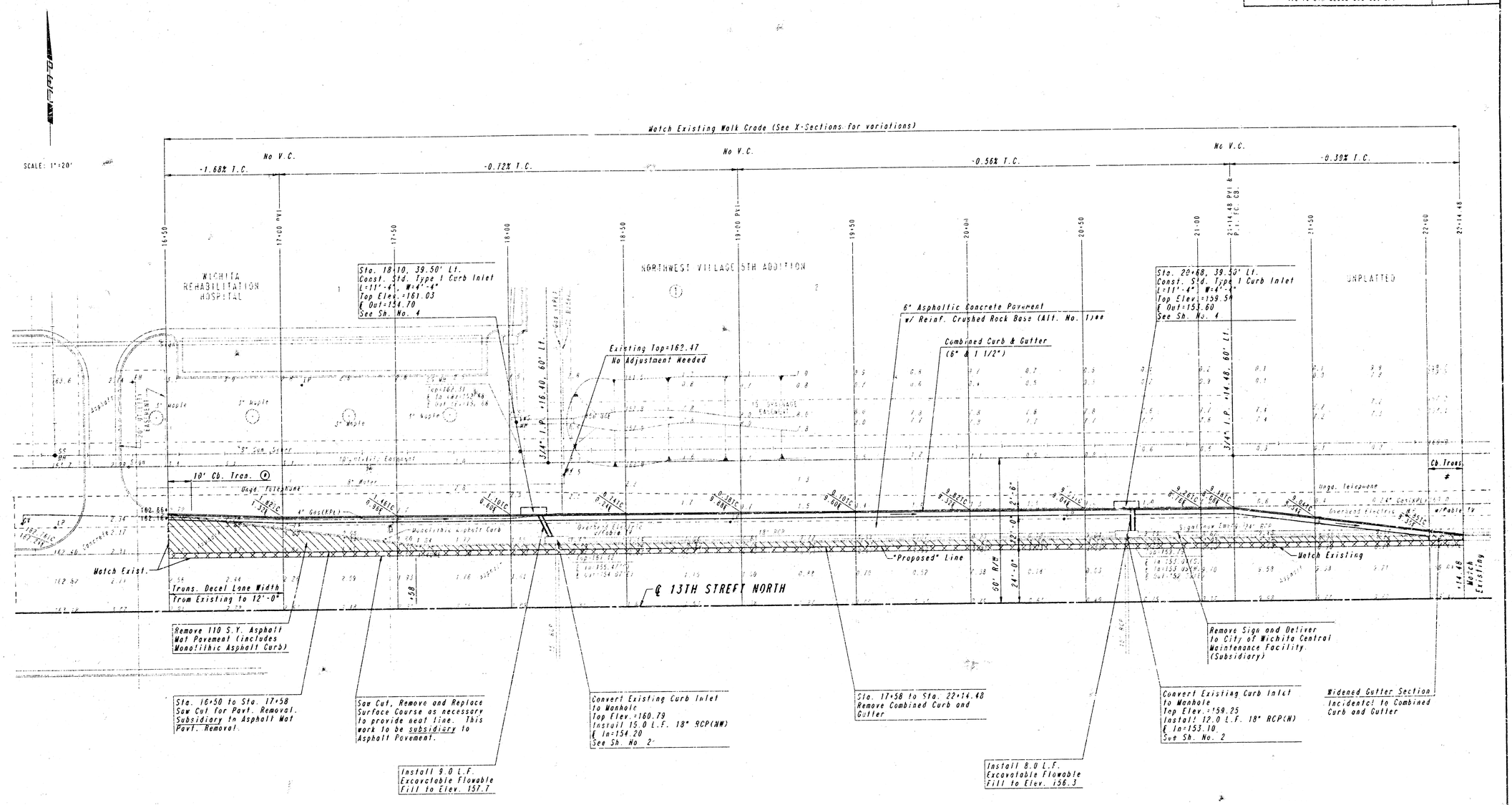

ASPHALT PAVEMENT, ASPHALT CURB, OR CONCRETE COMBINED CURB AND GUTTER REMOVAL

* MATCH EXISTING

⊙ TRANSITION FROM EXISTING MONOLITHIC CURB TO COMBINED CURB AND GUTTER (6" & 1 1/2"). TRANSITION TO BE PAID FOR AS "COMBINED CURB AND GUTTER (6" & 1 1/2")".

\# TRANSITION FROM COMBINED CURB AND GUTTER (6" & 1 1/2") TO EXISTING COMBINED CURB AND GUTTER. TRANSITION TO BE PAID FOR AS "COMBINED CURB AND GUTTER (6" & 1 1/2")".

** 10" ASPHALTIC CONCRETE PAVEMENT (8" BIT. BASE) FOR ALTERNATE NO. 2.

WICHITA REHABILITATION HOSPITAL
DECEL LANE

DECEL LANE PLAN

STA. 16+50.00 TO STA. 22+14.48

PROFESSIONAL ENGINEERING CONSULTANTS, P.A.
ENGINEERS
WICHITA, KANSAS

Designed by	BDB	Checked by	B.D.B.
Drawn by	DEP	Date JUNE 1992	Job No. 92142

PLAN
NOTE BOOK NO.
SURVEYED
PLOTTED
ALIGNMENT CHECKED
RT. OF WAY CHECKED
BY
DATE

DRAWING NAME: 32-92142 REHAB DECELANE
LOCATION: 04-1477
CENTER COORDINATES:
ROTATION ANGLE:
DATE LAST WORKED ON:
SPECIAL INSTRUCTIONS:

	SHEET NO	TOTAL SHEETS
472-76-235-82065-000-000-001	4	3

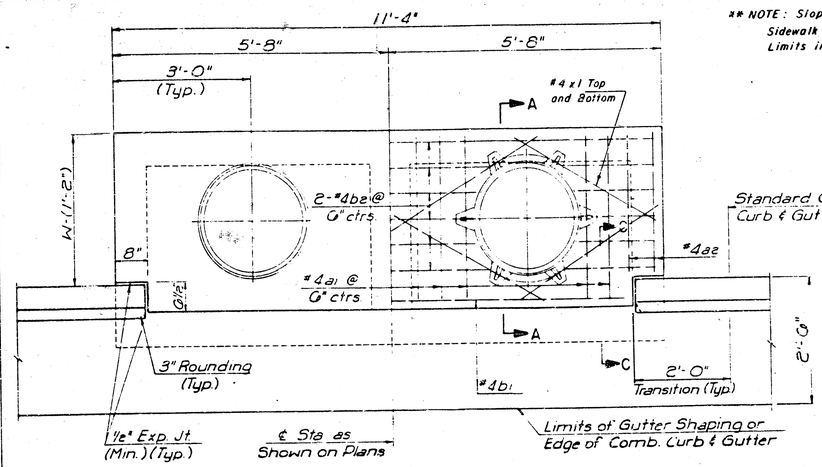

SLAB REINFORCING NOT SHOWN SHOWING SLAB REINFORCING

PLAN

** NOTE: Slope of Inlet Tops to match Sidewalk or Parking Slopes within Limits indicated.

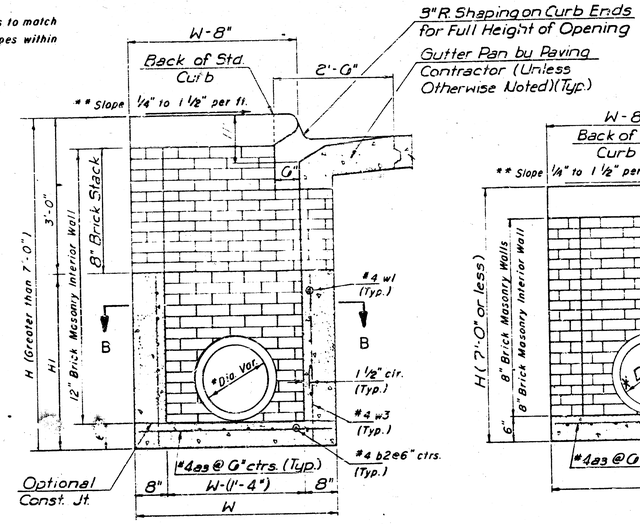

TYPICAL INLET SECTION AT CENTER WALL
(Reinforced Concrete Walls)

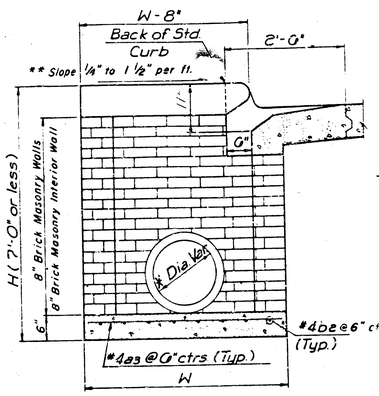

TYPICAL INLET SECTION AT CENTER WALL
(Masonry Walls)

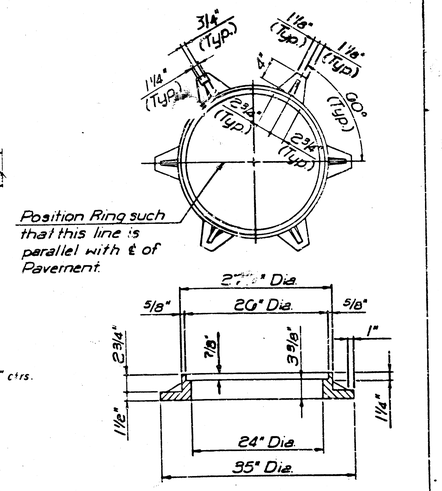

INLET FRAME (Weight = 180 LBS.)

SEE CITY OF WICHITA STANDARD MANHOLE FRAME AND COVER DETAIL SHEET FOR COVER DETAILS TO BE USED WITH INLET FRAME.

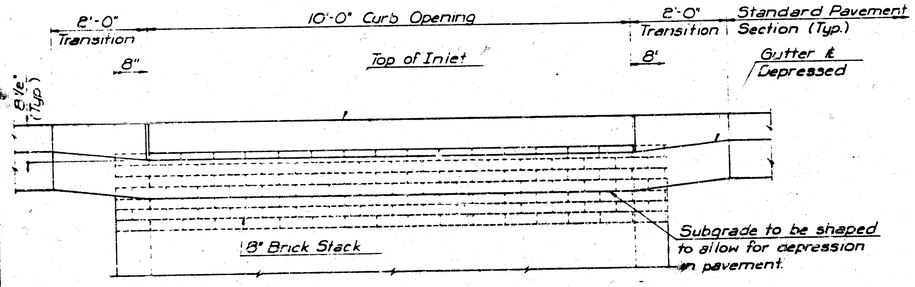

ELEVATION

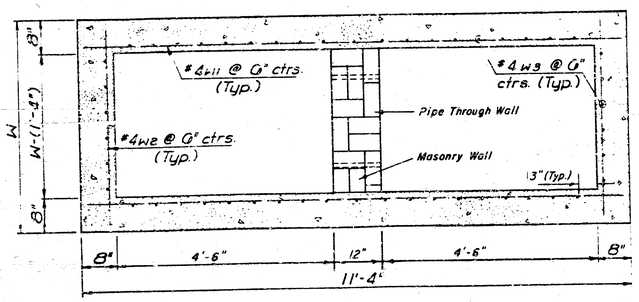

SECTION B-B

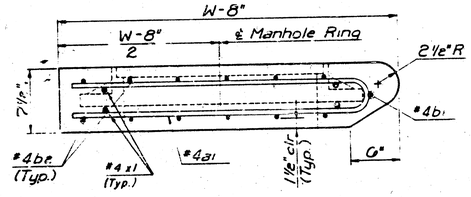

SECTION A-A

* A center wall opening shall be provided by means of a section of reinforced concrete pipe. See Case I and Case II Below.

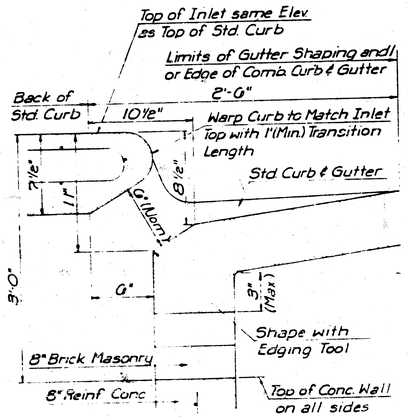

SECTION C-C

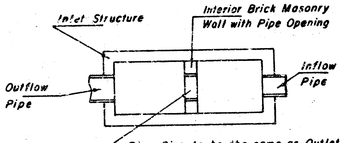

Pipe Size to be the same as Outlet Pipe Size. Flowline Elev. to be Average of Lowest Inflow Pipe Elev. and Outflow Pipe Elev.

CASE I

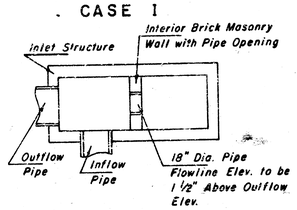

CASE II

NOTE: Center Wall Pipe Size shall be as Specified in Inlet Construction Note on the Plan/Profile Sheets for those Cases not shown here.

STANDARD CURB INLET PRECAST TOPS			
W	PRE-CAST TOP SIZE	SIDE OR INTERIOR WALL PIPE SIZE	CU. YD. CONC.
4'-6"	5'-8" x 11'-6" x 7 1/2"	21" & SMALLER	0.83 ±
5'-6"	6'-8" x 11'-6" x 7 1/2"	24" & 30"	1.09 ±
6'-6"	5'-8" x 11'-6" x 7 1/2"	36" & 42"	1.35 ±
7'-6"	6'-8" x 11'-6" x 7 1/2"	48" & 54"	1.61 ±
8'-6"	7'-8" x 11'-6" x 7 1/2"	60" & 66"	1.87 ±

PRECAST SLAB AND FLOOR REINFORCING											
		W=4'-4"		W=5'-4"		W=6'-4"		W=7'-4"		W=8'-4"	
MARK	SIZE	NO.	LENGTH	NO.	LENGTH	NO.	LENGTH	NO.	LENGTH	NO.	LENGTH
a1	#4	13	6'-7"	13	8'-7"	13	10'-7"	13	12'-7"	13	14'-7"
*a2	#4	4	6'-0"	4	8'-0"	4	10'-0"	4	12'-0"	4	14'-0"
a3	#4	23	4'-1"	23	5'-1"	23	6'-1"	23	7'-1"	23	8'-1"
b1	#4	1	9'-9"	1	9'-9"	1	9'-9"	1	9'-9"	1	9'-9"
*b2	#4	23	11'-1"	29	11'-1"	35	11'-1"	41	11'-1"	47	11'-1"
x1	#4	16	3'-10"	16	4'-2"	16	4'-6"	16	4'-10"	16	5'-2"

WALL REINFORCING											
		W=4'-4"		W=5'-4"		W=6'-4"		W=7'-4"		W=8'-4"	
Mark	Size	No.	Length	No.	Length	No.	Length	No.	Length	No.	Length
w1	#4	(1)	11'-1"	(1)	11'-1"	(1)	11'-1"	(1)	11'-1"	(1)	11'-1"
w2	#4	(1)	4'-1"	(1)	5'-1"	(1)	6'-1"	(1)	7'-1"	(1)	8'-1"
w3	#4	52	(2)	56	(2)	60	(2)	64	(2)	68	(2)

* Field bend or cut Reinforcing as required for clearance.

(1) 4 (H1-12") (H1-12") Rounded down to nearest 0.5'

(2) H1-3"

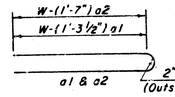

BENDING DIAGRAM

Revised 2-16-89

DETAIL STANDARD TYPE I CURB INLET

INLET OPENING = 6" x 10'-0"

CITY OF WICHITA

M.E. LINDEBAK, CITY ENGINEER

OCTOBER 1984

MANHOLE FRAME AND COVER DETAIL

ADOPTED AS STANDARD DESIGN BY

City of Wichita, Kansas

MANHOLE COVER

Weight: 180 Lbs.

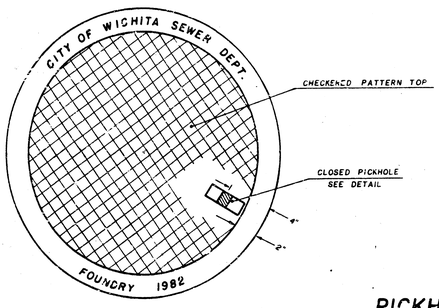

TOP VIEW

PICKHOLE DETAIL

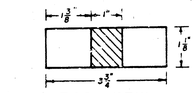

TOP VIEW

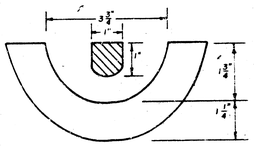

SECTION VIEW

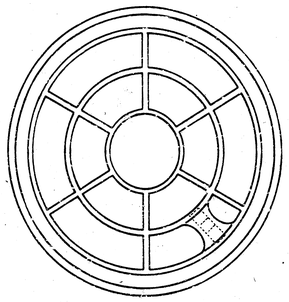

BOTTOM VIEW

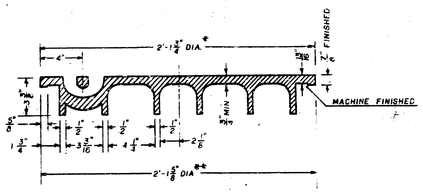

SECTION VIEW

* OUTSIDE DIA TOP OF COVER

** OUTSIDE DIA. BOTTOM OF COVER

MANHOLE FRAME

Weight: 240 Lbs.

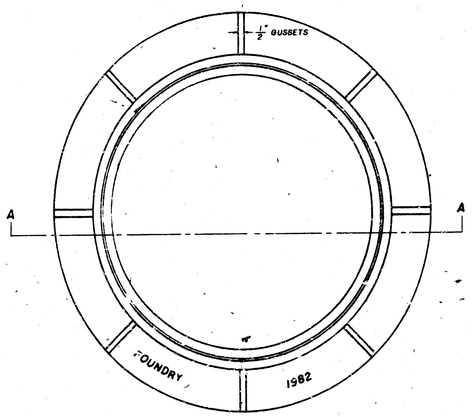

TOP VIEW

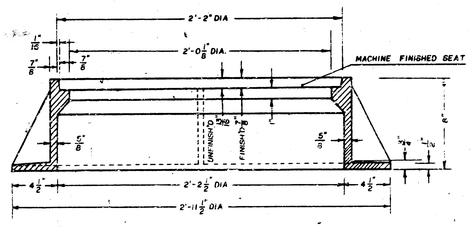

SECTION A-A

GENERAL NOTES

1. MANHOLE CASTINGS SHALL BE MANUFACTURED USING GOOD QUALITY GRAY IRON CONFORMING TO CLASS 30 OF A.S.T.M. DESIGNATION A-48. DIMENSIONS AND WEIGHTS SHOWN ON THE DETAILED DRAWINGS SHALL BE CONSIDERED AS MINIMUM REQUIREMENTS AND ANY DEVIATIONS FROM THE DIMENSIONS SHOWN MUST BE SPECIFICALLY APPROVED. THE FINISHED CASTINGS SHALL BE OF UNIFORM QUALITY, FREE FROM BLOWHOLES, POROSITY, HARD SPOTS, SHRINKAGE DISTORTIONS OR OTHER DEFECTS.

2. MANHOLE CASTINGS SHALL BE COATED WITH AN ASPHALT PAINT RESULTING IN A SMOOTH, TOUGH AND TENACIOUS COATING WHICH IS NOT BRITTLE OR TACKY.

3. MANHOLE CASTINGS SHALL BE MANUFACTURED SUCH THAT A COVER MANUFACTURED BY ANY ONE FOUNDRY WILL FIT INTERCHANGEABLY INTO A FRAME MANUFACTURED BY ANOTHER FOUNDRY AND STILL MEET ALLOWABLE CLEARANCES AND NON-ROCKING REQUIREMENTS. THIS WILL REQUIRE MANUFACTURING OF THE MATCHING FACES ON THE COVER AND THE FRAME TO CLOSE TOLERANCES.

4. THE OUTSIDE CIRCUMFERENCE OF THE VERTICAL FACE OF THE COVER AND THE INSIDE CIRCUMFERENCE OF THE VERTICAL FACE IN THE FRAME RECESS SHALL BE MANUFACTURED TO TOLERANCES SUCH THAT THE CLEARANCE BETWEEN THE COVER AND FRAME WILL NOT EXCEED 1/8" AT ANY POINT AROUND THE CIRCUMFERENCE OF THE COVER. THE SEATING SURFACES BETWEEN THE COVER AND FRAME SHALL BE MACHINED SUCH THAT THESE SURFACES SHALL MAKE FULL CONTACT FOR THEIR FULL CIRCUMFERENCE TO PRECLUDE THE COVER FROM ROCKING IN THE FRAME.

5. THE MANHOLE FRAME AND COVER SHALL BE MARKED WITH LETTERING INDICATING THE NAME OF THE MANUFACTURER AND THE YEAR WHEN THE COVER OR FRAME WAS CAST. THE COVER SHALL BE FURTHER IDENTIFIED WITH REGARDS TO OWNERSHIP USING LETTERS AT LEAST 1" IN HEIGHT. THIS IDENTIFICATION SHALL BE "CITY OF WICHITA SEWER DEPARTMENT". THE WORD DEPARTMENT MAY BE ABBREVIATED. THE TEXTURE OF THE TOP SURFACE OF THE COVER SHALL BE MANUFACTURED IN A CHECKERED PATTERN DESIGN AS INDICATED ON THE DRAWINGS. SMOOTH BLOCKOUTS SHALL BE UTILIZED TO HIGHLIGHT THE LETTERING ON THE COVER SURFACE. THE TOTAL AREA OF SMOOTH SURFACE BLOCKOUT SHALL NOT EXCEED THE AREA AS INDICATED ON THE DRAWING. POSITIONING OF SMOOTH BLOCKOUTS AND LETTERING MAY VARY FROM THAT SHOWN ON THE DETAILED DRAWING.

100 90 80 70 60 50 40 30 20 10 0

1G5
1G0
18+50
T.C. 1G0.74
C = 33
25' Exc. = 31
1G5
1G0
18+25
T.C. 1G0.92
C = 37
25' Exc. = 32
1G5
1G0
18+00
T.C. 1G1.10
C = 37
25' Exc. = 34
1G5
1G0
17+75
T.C. 1G1.28
C = 34
25' Exc. = 33
1G5
1G0
17+50
T.C. 1G1.46
C = 33
25' Exc. = 31
1G5
1G0
17+25
T.C. 1G1.64
C = 26
25' Exc. = 27
1G5
1G0
17+00
T.C. 1G1.82
C = 17
25' Exc. = 20
1G5
1G0
16+75
T.C. 1G2.24
C = 8
25' Exc. = 12
1G5
1G0
16+50
T.C. 1G2.66
C = 3
25' Exc. = 5
1G5
1G0
16+25
1G5
1G0
16+00

Totals
Exc. = 690 C.Y.

Exc. = 225 C.Y.

100 90 80 70 60 50 40 30 20 10 0

Sheet 6 of 8

Proj. No. 472-1G-245-8205-000-000-201

Rehab. Hospital - Decel Lane

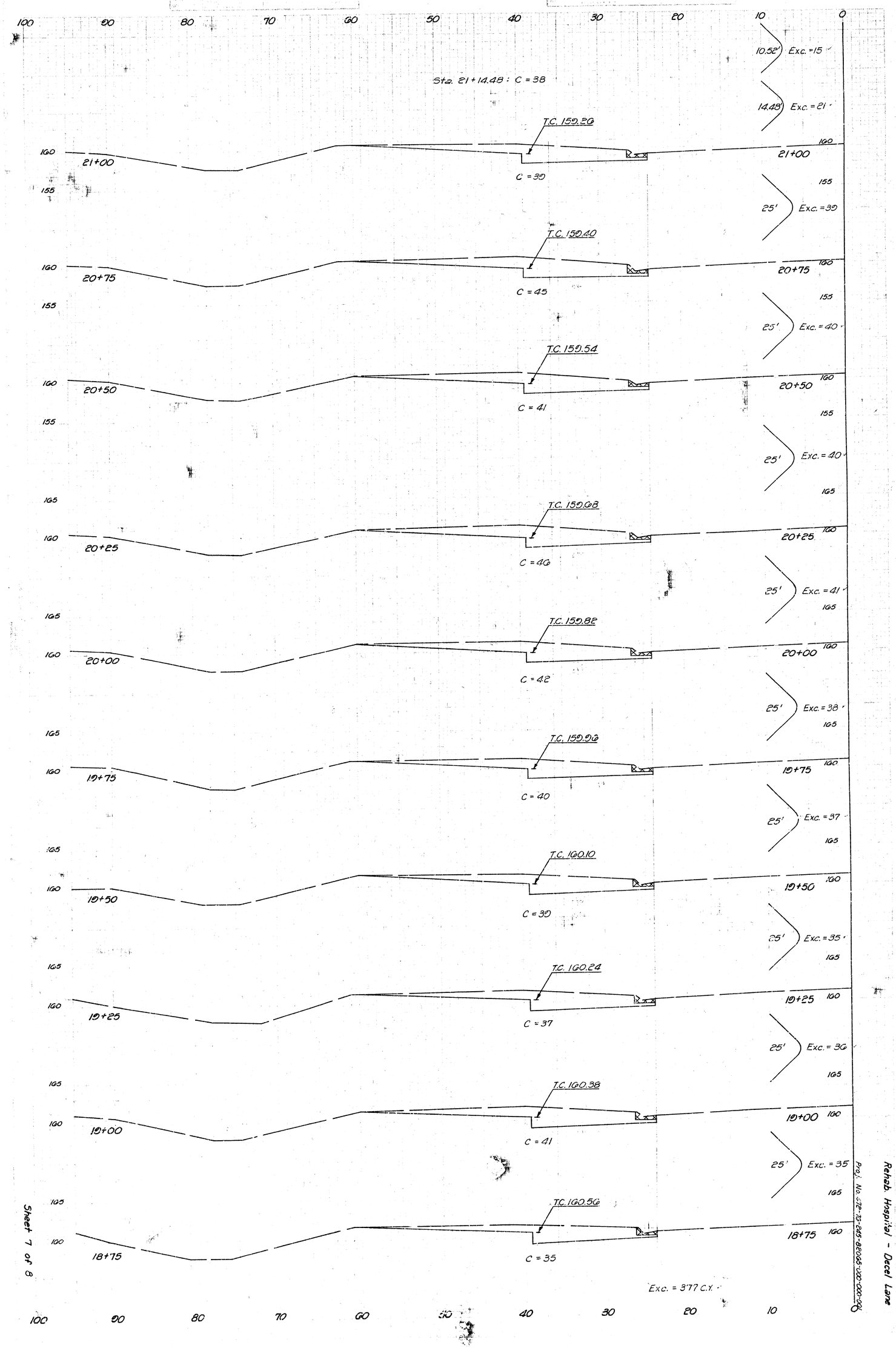

Rehab. Hospital - Decel Lane

Proj. No. 672-73-245-82065-000-000-001

Sheet 7 of 8

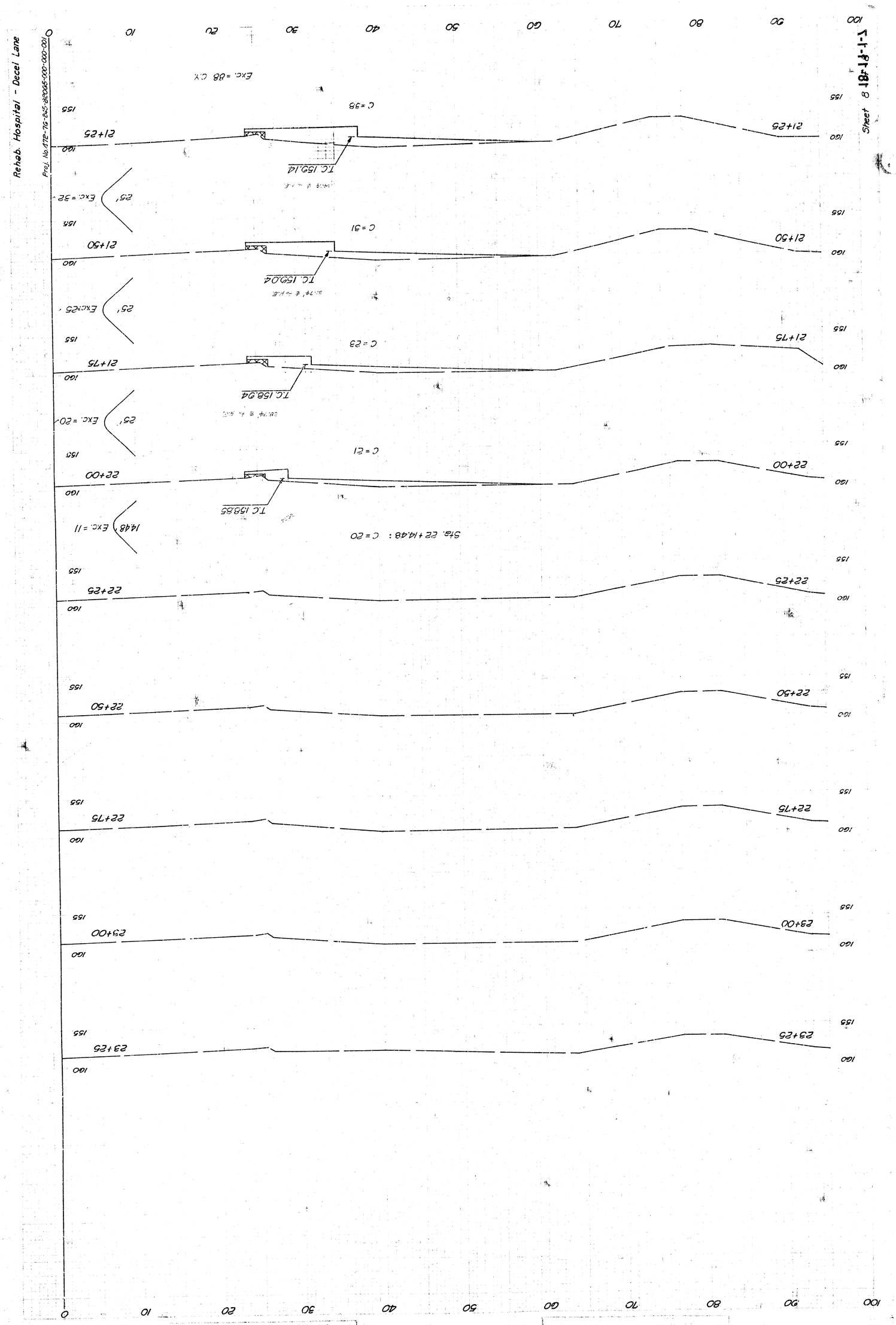
Rehab. Hospital - Decel Lane
Proj. No.472-76-245-82065-000-000-001
Sheet 8
21+25
21+50
21+75
22+00
22+25
22+50
22+75
23+00
23+25
C=38
C=31
C=23
C=21
T.C. 159.14
T.C. 159.04
T.C. 158.94
T.C. 158.85
Exc. = 88 C.Y.
Exc. = 32
Exc. = 25
Exc. = 20
Exc. = 11
Sta. 22+14.48 : C=20
0
10
20
30
40
50
60
70
80
90
100
155
160