COUNTY	STATE	PROJECT NUMBER	FISCAL YEAR	SHEET NO.	TOTAL SHEETS
SEDGWICK	KANSAS	819 - W	1988	44	92

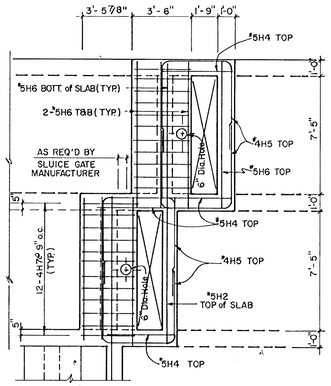

PLAN-TOP SLAB @ EL. 1278.0
(SLUICE GATE STRUCTURE)

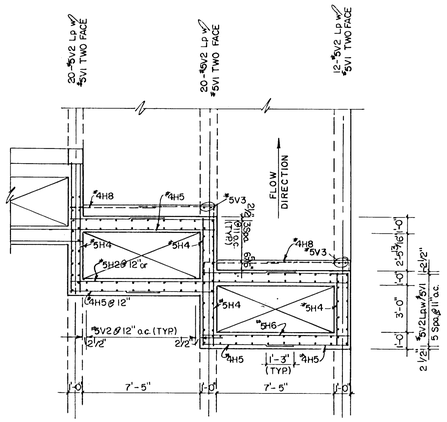

SECTION E-E
(SLUICE GATE STRUCTURE)
(REFER TO SECT. B-B FOR LOCATION)

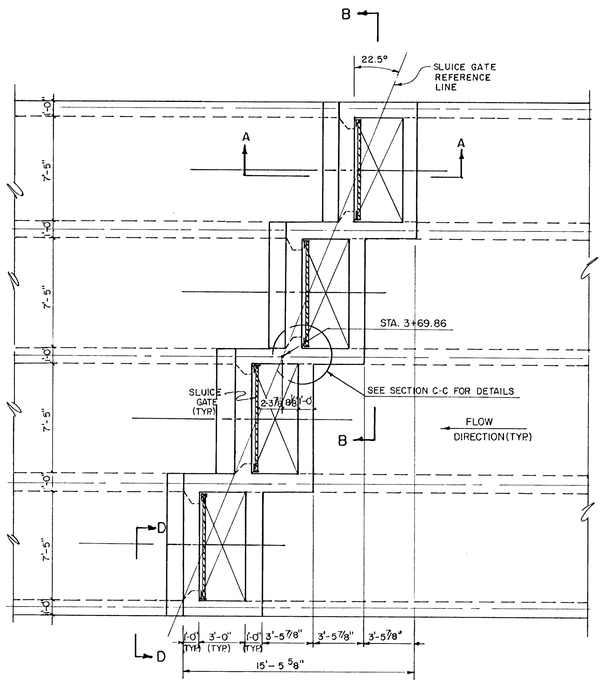

SLUICE GATE STRUCTURE

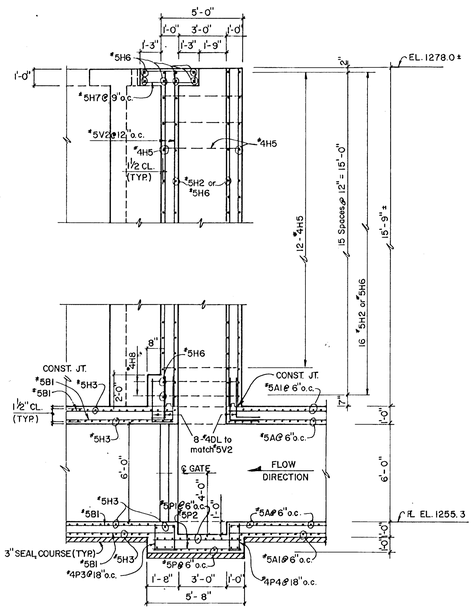

SECTION A-A
(SLUICE GATE STRUCTURE)

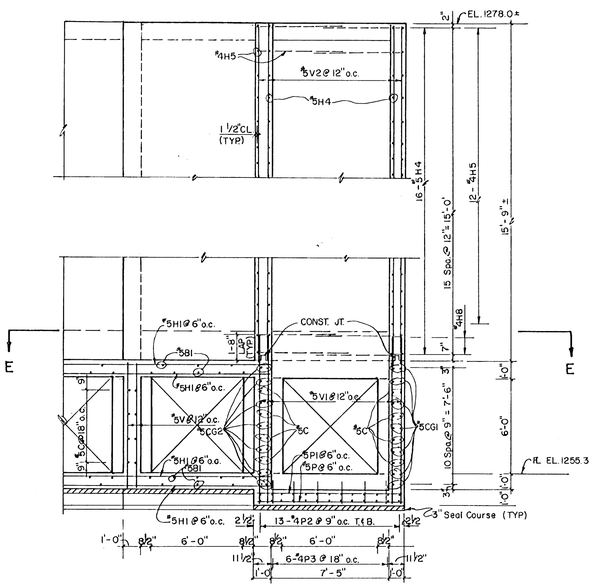

SECTION B-B
(SLUICE GATE STRUCTURE)

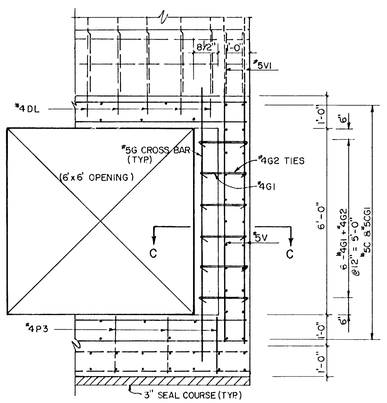

SECTION D-D
(SLUICE GATE STRUCTURE)

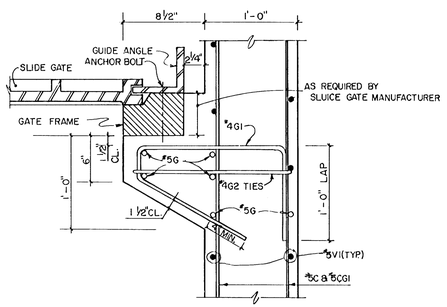

WALL SECTION C-C @ SLUICE GATE

SOUTH SENECA STREET

SLUICE GATE STRUCTURE DETAILS

LEVEE BREACH STRUCTURE

PREPARED BY
SEDGWICK COUNTY BUREAU OF PUBLIC SERVICES
HIGHWAY DIVISION

DAVID C. SPEARS, P.E. DIRECTOR

REVISED	SCALE	DESIGNED	TRACED	CHECKED	SHEET NO
	NONE	SHH.	REF	DV.R.	44
	DATE	8-87	8-87	3-88	
	PLAINFILE		TOTAL SHEETS 92		