COUNTY	STATE	PROJECT NUMBER	FISCAL YEAR	SHEET NO.	TOTAL SHEETS
SEDGWICK	KANSAS	819 - W	1988	45	92

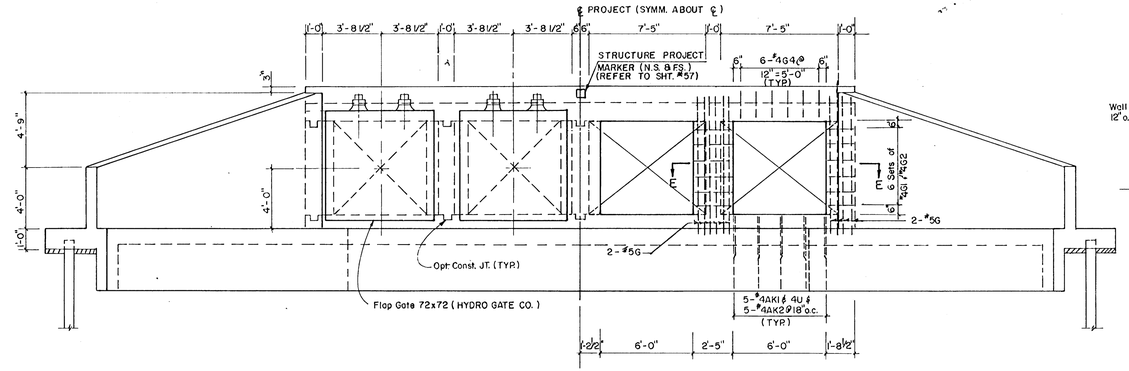

OUTLET WINGWALL & ENDWALL ELEVATION

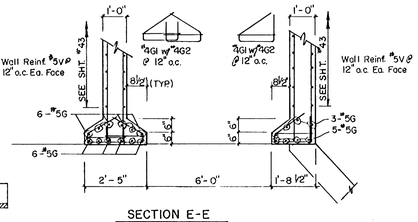

SECTION E-E

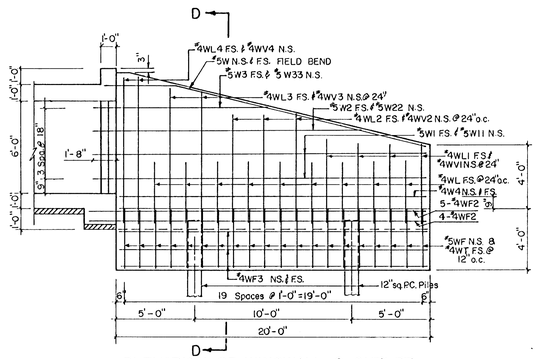

ELEVATION OF WINGWALL @ OUTLET

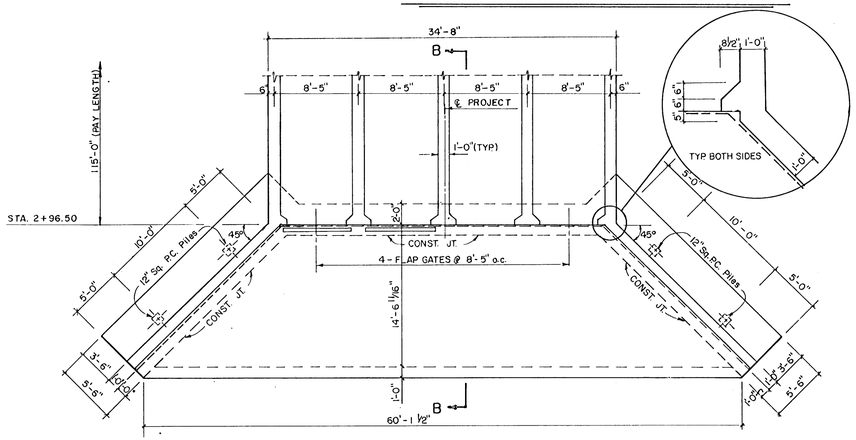

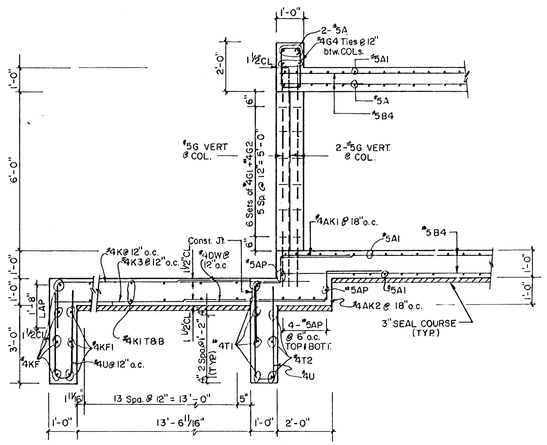

SECTION B-B

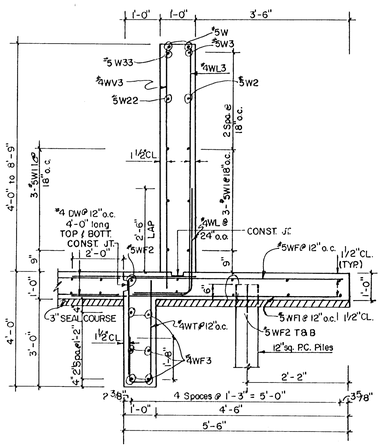

SECTION D-D

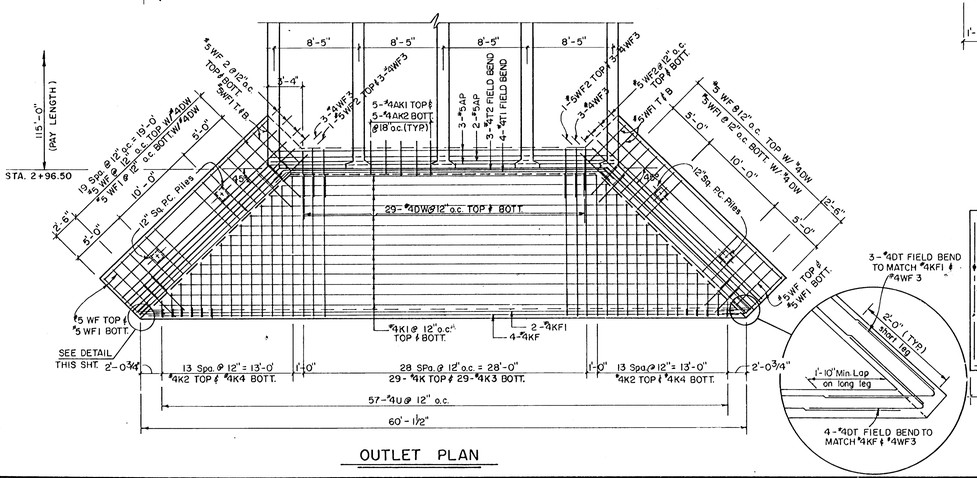

OUTLET PLAN

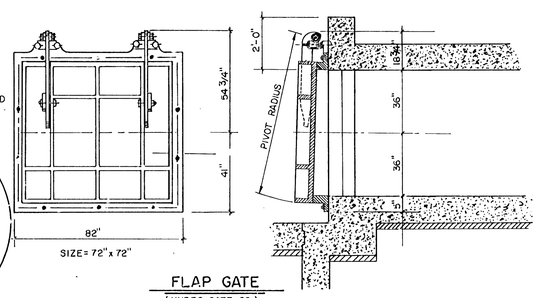

FLAP GATE
(HYDRO GATE CO.)

SOUTH SENECA STREET

OUTLET & FLAP GATE DETAILS

LEVEE BREACH STRUCTURE

PREPARED BY
SEDGWICK COUNTY BUREAU OF PUBLIC SERVICES
HIGHWAY DIVISION

DAVID C. SPEARS, P.E. — DIRECTOR

REVISED	SCALE	DESIGNED	TRACED	CHECKED	SHEET NO
	NONE	S.H.H.	R.E.F.	D.V.R.	45
	DATE	8-87	8-87	3-88	
	PLAINFILE		TOTAL SHEETS 92		