FAWA REGION NO.	STATE	PROJECT NO.	YEAR	SHEET NO.	TOTAL SHEETS
7	KANSAS	54-87-5942(2)	1980	19	32

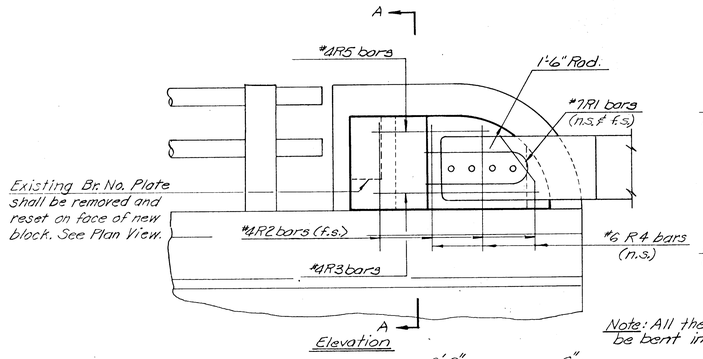

Elevation

Note: All the #4 bars shall be bent in the field.

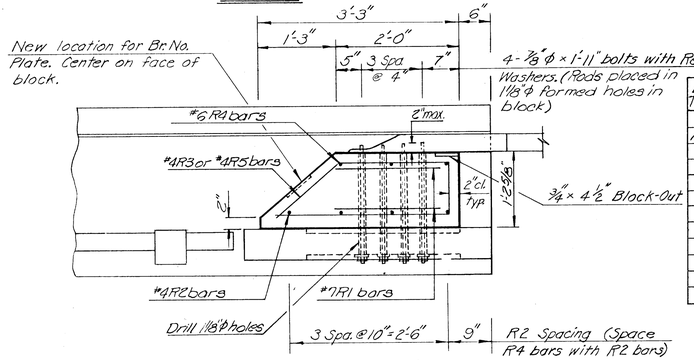

Plan
(Showing Entrance Detail)

Note: For locations of End Blocks, See Construction Layout Sheets. (Three End Blocks required)

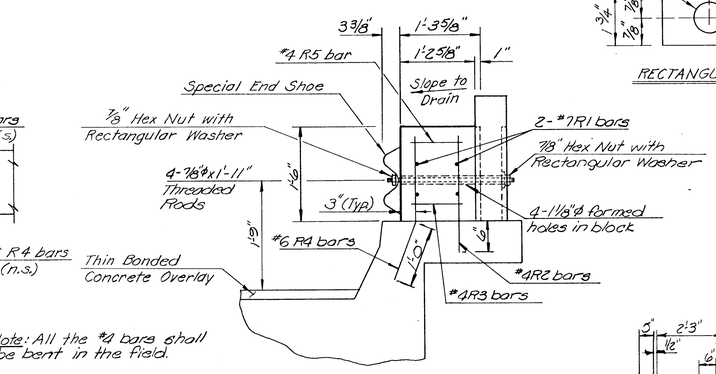

Section A-A

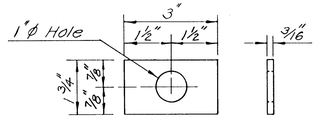

RECTANGULAR WASHER

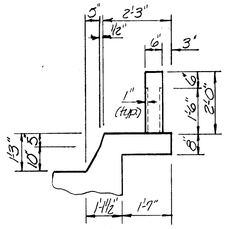

Typical Section thru Curb
(Showing Exist. Dim.)

Bill of Reinforcing Steel for Three Entrance Connections			
Straight Bars			
Mark	Number	Size	Length
R2	12	#4	1'-10"
R3	3	#4	5'-2"
R5	3	#4	6'-8"
Bent Bars			
R1	6	#7	3'-9"
R4	9	#6	2'-4"

Bending Diagrams
(All dim. are out to out)

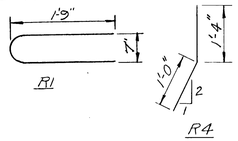

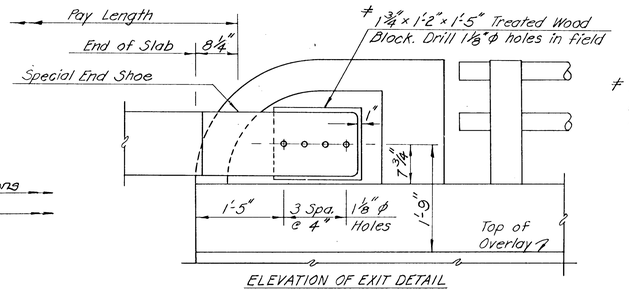

ELEVATION OF EXIT DETAIL

‡ Wood block shall be given a preservative of Creosote or Penta-Solution as provided in the Specifications.

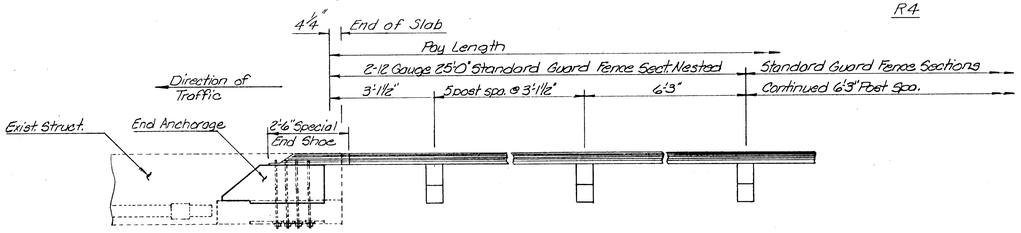

Plan (Entrance End)

Note: Install all Guard Fence Sections with overlaps away from direction of traffic. All splices to be made on post.

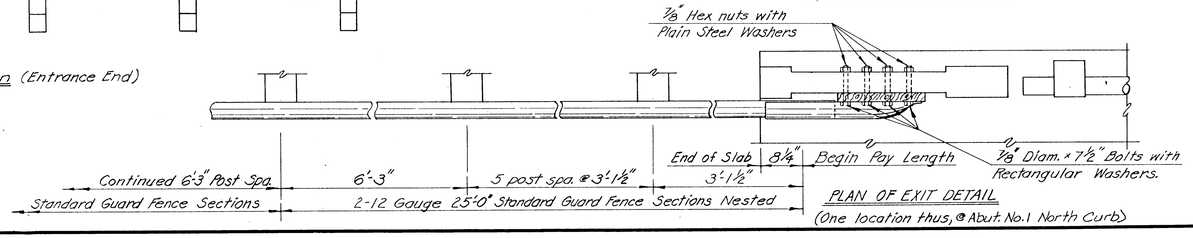

PLAN OF EXIT DETAIL
(One location thus, @ Abut. No. 1 North Curb)

GENERAL NOTES

UNIT STRESSES: fc = 1200 p.s.i., f'c = 3000 p.s.i., fs = 20,000 p.s.i.

TRAFFIC: Traffic shall be carried through construction. (See traffic control sheets)

CONCRETE: Class AAA Conc. (AE) shall be used throughout. Bevel all exposed edges with a 3/4" triangular molding unless otherwise noted.

REINFORCING: All dimensions relative to reinforcing steel are to centerline of bar unless otherwise noted.

DIMENSIONS: Dimensions and stations of existing structures are taken from old plans and shall be verified by the Contractor in the field prior to construction.

DRILLING AND GROUTING: All materials, drilling and grouting required to attach the Special End Shoe to the existing structure shall not be paid for directly but shall be subsidiary to 'Steel Plate Guard Fence (Galv.)'

SPECIAL END SHOE: Special End Shoe shall be 10 guage steel and galvanized in accordance with ASTM Designation A525 with coating class 2.50. The shoe has the same section as through beam guardrail. Special End Shoe shall be subsidiary to 'Steel Plate Guard Fence (Galv.)'.

BOLTS: All bolts, threaded rods, nuts & washers are to be galvanized in accordance with subsection 1006.16 of the Standard Specifications and shall be subsidiary to 'Steel Plate Guard Fence (Galv.)'.

STEEL PLATE GUARD FENCE: One section of the two used in Nested Rail Section shall be subsidiary to bid item Steel Plate Fence (Galv.).

ALIGNMENT OF GUARD FENCE ON APPROACH TO BRIDGE: For alignment of guard fence on approach to bridge, see the next sheet.

** Note: These quantities are subsidiary to Steel Plate Guard Fence (Galv.).

Quantities ** (One Ent. connection)		
Class AAA Conc. (AE)	0.2	Cu. Yds.
Reinforcing Steel	75	Lbs.

NO.	DATE	REVISIONS	BY	APP'D
3				
2				
1				

KANSAS DEPARTMENT OF TRANSPORTATION
Br. No. 54-87-25.80 Bridge Repair

STEEL PLATE GUARD FENCE CONNECTION TO BRIDGE and RETAINING WALL

Proj. No. 54-87-5942(2) Sedgwick Co.

SHEET NO. 19 OF 32	SCALE		APP'D		
DESIGNED PAM	DETAILED RGF	QUANTITIES SGB		TRACED	
DESIGN CK. SGB	DETAIL CK. SGB	QUAN. CK. RAM		TRACE CK.	