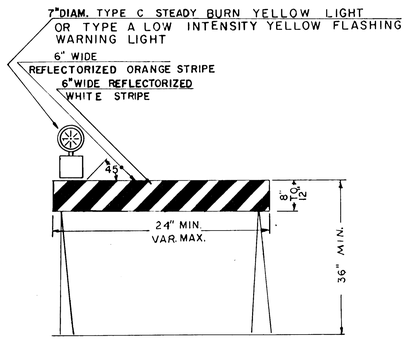
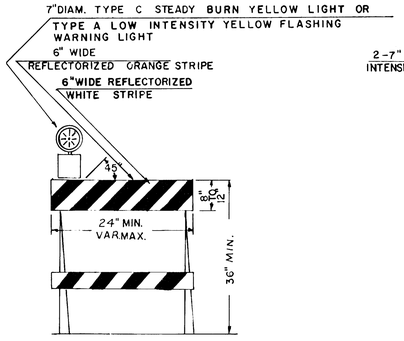
FHWA REGION NO.	STATE	PROJECT NO.	YEAR	SHEET NO.	TOTAL SHEETS
7	KANSAS	54-87-5942(2)	1980	31	32

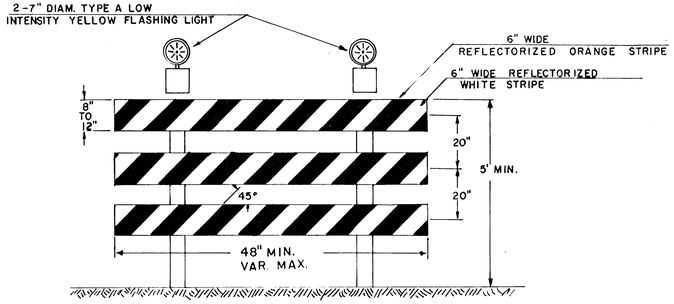
TRAFFIC CONTROL DEVICES
FOR TRAFFIC MOVEMENT THROUGH CONSTRUCTION



TYPE I BARRICADE B(I) WITH ONE YELLOW STEADY BURN OR FLASHING WARNING LIGHT



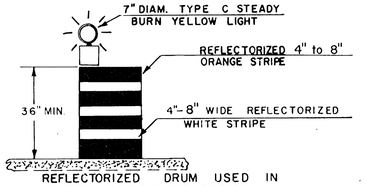
TYPE II BARRICADE B(II) WITH ONE YELLOW STEADY BURN OR FLASHING WARNING LIGHT



TYPE III BARRICADE B(III)

NOTE:

A minimum of two Type A Flashing Lights shall be used at each location where a Type III Barricade or barricades are used. A light shall be mounted on the outside corner of the end barricades when more than one is used.



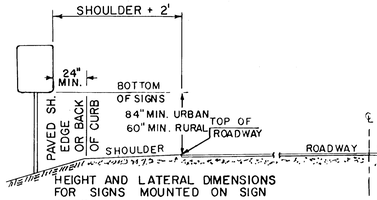
REFLECTORIZED DRUM USED IN SERIES FOR CHANNELIZATION

Barricade Note

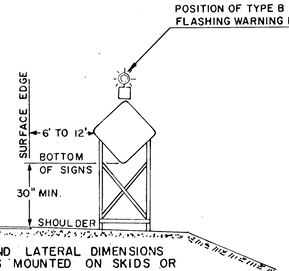
For wooden barricades, nominal lumber dimensions will be satisfactory. For rails less than 3 ft. long, 4" wide stripes may be used. The number of reflectorized rail faces for the (3) types of barricades are to be as follows:

Type I-2 (one each direction)
Type II-4 (two each direction)
Type III-3 if facing traffic in one direction; 6 if facing traffic in two directions

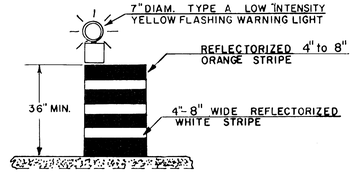
Install Type I or II Barricades at a spacing of 500 feet to 750 feet (maximum) in areas outside City Limits or 100 feet to 200 feet (maximum) in areas inside City Limits. The spacing to be determined by the ENGINEER. Barricades shall be placed approximately at right angles to the surface edge. Each Barricade shall have one Type "A" yellow flashing or Type "C" steady burn warning light (as determined by the ENGINEER) on top near the roadway end at night. Due to existing conditions the ENGINEER may require a decrease in the spacing stipulated above for Barricades and an increase or decrease in the spacing between cones and/or signs. Additional Barricades and Lights required as a result of reduced spacing will be paid for as extra work. All dimensions shown are nominal.



HEIGHT AND LATERAL DIMENSIONS FOR SIGNS MOUNTED ON SIGN POSTS

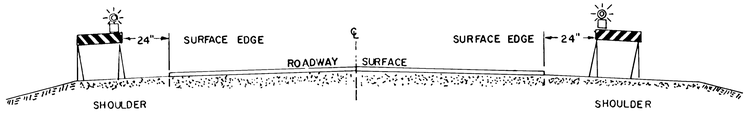


HEIGHT AND LATERAL DIMENSIONS FOR SIGNS MOUNTED ON SKIDS OR OTHER MOVABLE MOUNTS



REFLECTORIZED DRUM USED SINGLY

The predominant color on drums shall be orange with at least two horizontal, circumfrential white stripes 4 to 8 inches wide.



POSITION OF TYPE I OR II BARRICADES WITH ONE YELLOW STEADY BURN OR FLASHING WARNING LIGHT USED ON SHOULDERS ADJACENT TO SURFACE EDGES. SEE NOTE ABOVE.

TO BE USED THROUGHOUT THE PROJECT WHERE NEEDED AS DETERMINED BY THE ENGINEER

NOTE:

All traffic control devices and flagman's equipment shall comply to (1) Section 107 of the 1973 Edition of the Standard Specification and to any Supplemental Specification to this section and (2) the Manual on Uniform Traffic Control Devices For Streets and Highways, latest edition.

Signs, Barricades and Drums used to control traffic shall be reflectorized with reflective sheeting.

Lights placed on signs, barricades and drums shall have a 7" minimum diameter lens. The flashing light shall be Type 'A' Low Intensity regulated to flash 55 to 75 times per minute with a flash duration not less than 10% of time. The steady burn lights shall be Type 'C'.

All signs, barricades, drums, steady burn and flashing lights shall be securely erected and maintained in good condition at all times.

All dimensions shown are nominal.

When no work is in progress all equipment shall be removed from the recovery area and placed or parked at the extreme limits of the right of way or at sites approved by the ENGINEER.

Temporary traffic control devices when not in use shall be either covered with an opaque weatherproof material or removed from the recovery area as approved by the ENGINEER.

The name of the agency, contractor or supplier shall not be shown on the face parts of any barricade.

NO.	DATE	REVISIONS	BY	APP'D
9	11/6/79	Notes, Sign Mtg. Dor - Drum Dimen.	RJH	AFT
8	4/19/78	Barricade, Agency name (Notes)	KB	AFT
7	1-3-78	Signs, Barricades marked near Rdwy.	RR	AFT
6	3/30/77	Lateral dim. at sign	AFT	AFT
5	2/2/77	Sign spacing, Lights, notes	AFT	AFT
4	5/20/76	Removal of ORANGE FLAGS	HH	AFT
3	7-7-75	Delete Port. Fl Spt., Fiberglass Bdrlts	JTG	AFT
2	11-1-74	NOTICE	AFT	AFT
1	6-20-73	1973 Std Spec. note	AFT	AFT

KANSAS DEPARTMENT OF TRANSPORTATION

CONSTRUCTION TRAFFIC CONTROL DEVICES AND LOCATIONS: SIGNS, BARRICADES & DRUMS

STD. 752

12-16-73

SHEET NO. 31 OF 32	SCALE	APP'D	
DESIGNED AFT	DETAILED LT	QUANTITIES	TRACED LT
DESIGN CK	DETAIL CK AFT	QUAN. CK	TRACE CK