STATE	PROJECT NO.	YEAR	SHEET NO.	TOTAL SHEETS
KANSAS	54-87 K-6657-01	2002	585	1122

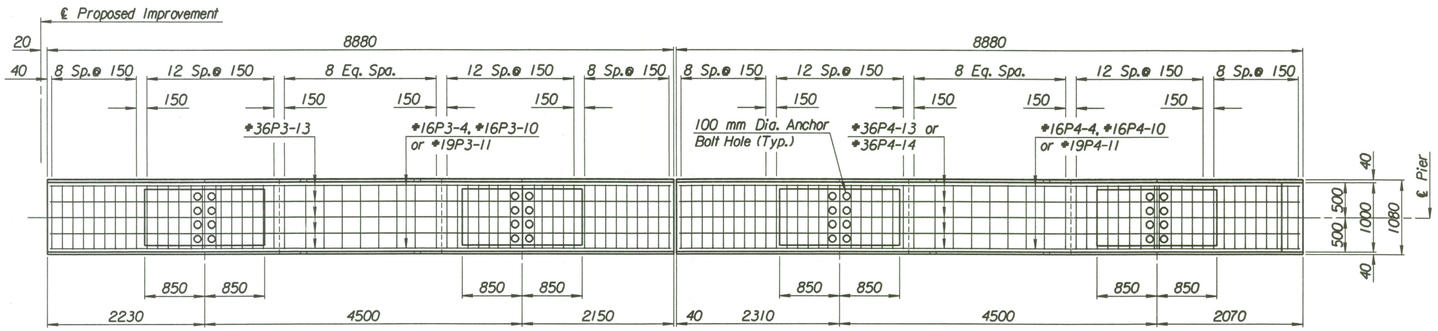

PLAN

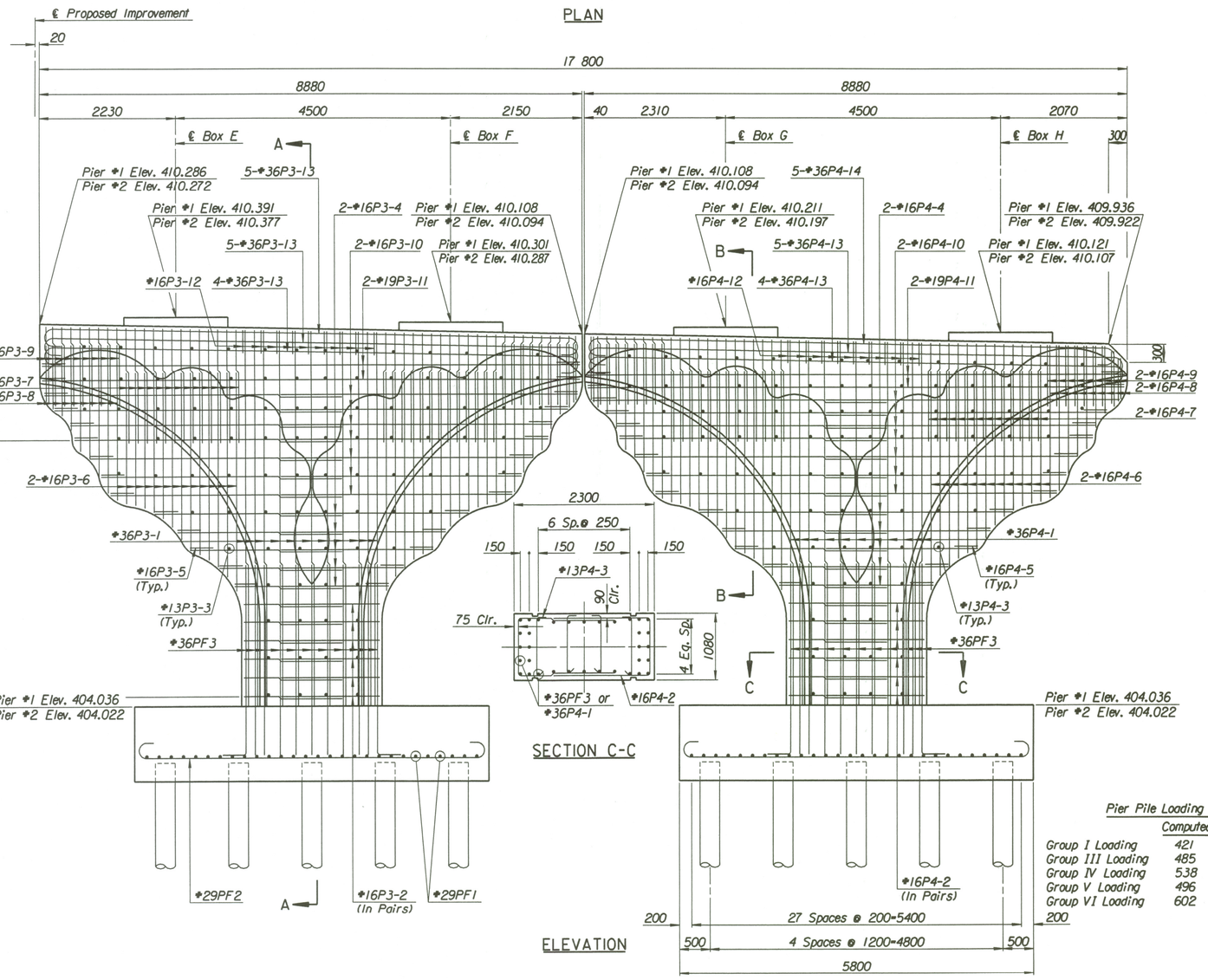

ELEVATION

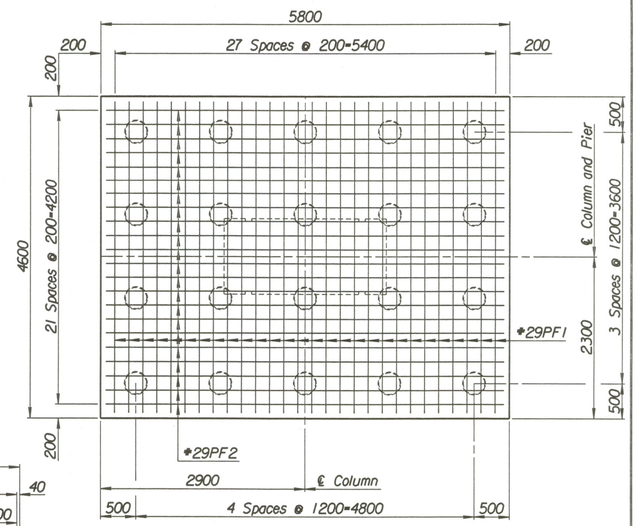

FOOTING PLAN

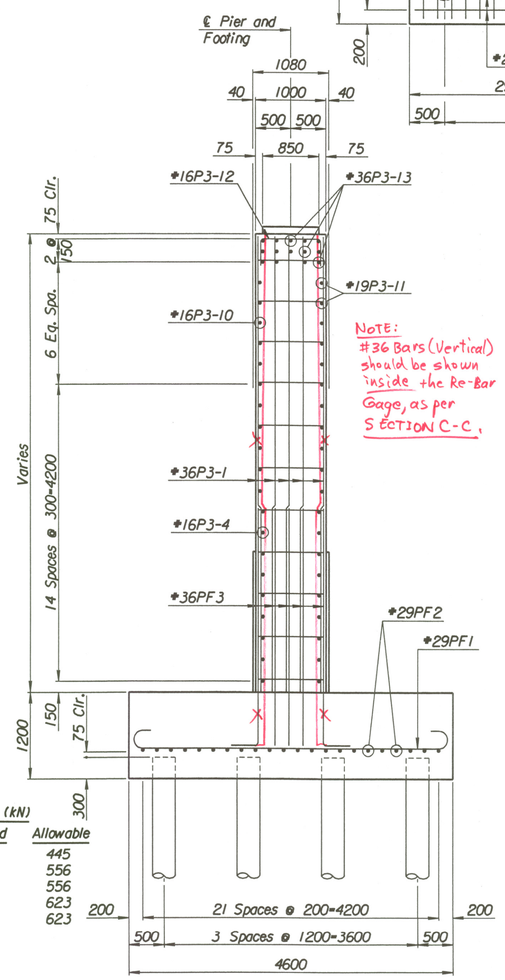

NOTE:
#36 Bars (Vertical) should be shown inside the Re-Bar Gage, as per SECTION C-C.

SECTION A-A

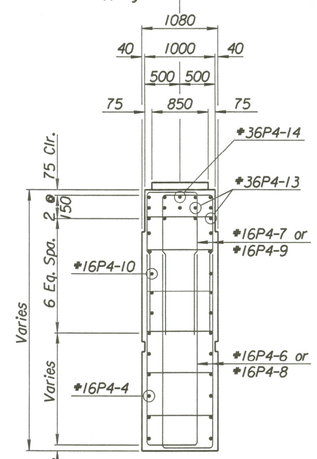

SECTION B-B

SECTION C-C

Pier Pile Loading (kN)

	Computed	Allowable
Group I Loading	421	445
Group III Loading	485	556
Group IV Loading	538	556
Group V Loading	496	623
Group VI Loading	602	623

No.	Revisions	By	Date
1			

CITY OF WICHITA

BR. NO. 54-87-20.12 (497) E.B. STA. 17+332.607

PIER DETAILS

KELLOGG (US-54)
OVER TYLER ROAD

SEDGWICK COUNTY

Professional Engineering Consultants, P.A.
303 S. TOPEKA • WICHITA, KANSAS 67202
316-262-2691 • FAX 316-262-3003

Designed by	P.D.F.	Checked by	R.A.S.
Drawn by	W.L.L.	Date April, 2002	Job No. 97362

Drawn by: wll
Plotted by: wll 3-26-2002
i:/1997/97362/001/bridge/tylerrd/pier