CITY OF WICHITA, KANSAS

SANITARY SEWER SYSTEM IMPROVEMENTS

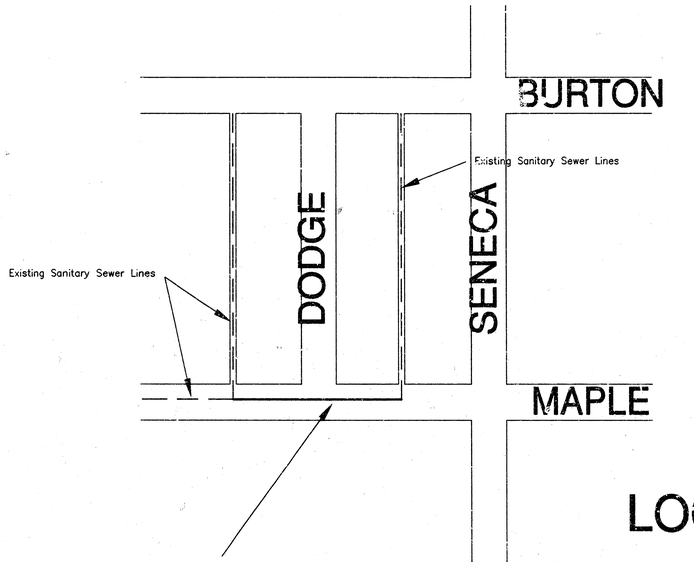
REPLACEMENT OF SANITARY SEWER, LOCATED IN MAPLE STREET FROM ALLEY WEST OF DODGE TO ALLEY EAST OF DODGE STREET

PROJECT NO.: 468-82647

INDEX CODE: 621466

INDEX:

SHEET	1	TITLE SHEET
SHEET	2	STANDARD MANHOLE DETAILS TYPE 'P'
SHEET	3	PLAN-PROFILE SHEETS



SCALE : 1" = 150'

LOCATION MAP

GENERAL NOTES:

1. CONTRACTOR WILL BE REQUIRED TO PROVIDE A MINIMUM ADVANCE NOTICE OF TWENTY-FOUR (24) HOURS TO UTILITY COMPANIES PRIOR TO STARTING ANY EXCAVATION.

KANSAS GAS & ELECTRIC	316-261-6421
K.P.L. GAS SERVICE	316-942-8350
SOUTHWESTERN BELL TELEPHONE CO.	316-383-0454
WICHITA WATER DEPARTMENT	316-269-4555
MULTIMEDIA CABLEVISION	316-262-4270
WICHITA SEWER MAINTENANCE	316-258-4210
KANSAS ONE-CALL	1-687-2470

2. THE SEWER LINE SHALL BE CONSTRUCTED ON THE ALIGNMENT SHOWN BY THE PLANS. TREES AND SHRUBS IN PUBLIC RIGHT-OF-WAY WHICH ARE IN DIRECT CONFLICT WITH PROPOSED NEW CONSTRUCTION SHALL BE REMOVED BY THE CONTRACTOR WITH ENGINEER'S APPROVAL. TREES AND SHRUBS WHICH ARE NOT IN DIRECT CONFLICT WITH PROPOSED NEW CONSTRUCTION SHALL BE SAVED AND PROTECTED FROM DAMAGE. THE COST FOR ANY NECESSARY TREE TRIMMING, CLEARING AND/OR GRUBBING SHALL BE INCLUDED IN THE PRICE BID FOR INSTALLED SEWER PIPE.

3. EXISTING UTILITIES AND THEIR LOCATIONS, AS SHOWN ON THE PLANS, ARE NOT GUARANTEED FOR ACCURACY. IT SHALL BE THE CONTRACTOR'S RESPONSIBILITY TO CONTACT KANSAS ONE-CALL AND INDIVIDUAL UTILITY COMPANIES AND REQUEST THAT THEY FIELD LOCATE THEIR UNDERGROUND FACILITIES. CONTRACTOR WILL THEN IDENTIFY POTENTIAL CONFLICTS (BOTH HORIZONTAL AND VERTICAL) OF NEW SEWER LINE WITH EXISTING UTILITY LINES AND NOTIFY THE ENGINEER IMMEDIATELY. CONTRACTOR WILL COORDINATE ADJUSTMENT OF UTILITIES, IF NEEDED, WITH UTILITY COMPANIES.

4. RUBBLE FROM THE REMOVAL OF MISCELLANEOUS STRUCTURES AND EXCESS EXCAVATION WHICH IS TO BE WASTED SHALL BE DISPOSED OF ON SITES TO BE PROVIDED BY THE CONTRACTOR. THESE SITES SHALL BE APPROVED BY THE ENGINEER AS TO SUITABILITY, APPEARANCE AND SITE LOCATION.

5. THE CONTRACTOR SHALL RESPONSIBLE FOR PRESERVING PROPERTY IRONS. THE CONTRACTOR WILL BE REQUIRED TO RE-ESTABLISH ANY PROPERTY IRONS WHICH ARE DAMAGED OR DESTROYED BY HIS CONSTRUCTION OPERATIONS. SUCH IRONS SHALL BE RE-ESTABLISHED BY A LICENSED LAND SURVEYOR IN ACCORDANCE WITH STATE LAW.

6. CONTRACTOR SHALL BE RESPONSIBLE FOR MAINTAINING TRAFFIC ON STREETS DURING ALL PHASES OF CONSTRUCTION. CONTRACTOR SHALL INSTALL APPROPRIATE BARRICADES, TRAFFIC CONTROL SIGNS AND FLAGGERS AS NECESSARY TO MAINTAIN TRAFFIC.

7. TOP OF NEW MANHOLE ELEVATIONS AS SHOWN ON PLAN PROFILE SHEET ARE APPROXIMATE. TOP OF NEW MANHOLE ELEVATIONS, IN UNPAVED AREAS, SHALL BE SET IN FILED SUCH THAT IT IS 0.2 FEET ABOVE ADJACENT NATURAL GROUND.

BENCH MARK:

B.M. # 1: CITY OF WICHITA STANDARD DISK, 32.6 FT. ±. AND 39 FT. WEST OF INTERSECTION OF MAPLE AND SENECA STREETS.
ELEV. = 109.78

B.M. # 2: CHISELED SQUARE CUT ON NE CORNER OF 5'X5' CONC. FLAG POLE BASE NORTH SIDE OF KANSAS MASONIC HOME, STA. 4+98, RT.
ELEV. = 112.37

AS BUILT
6-6-01 RDL

DALBAR M. KRAUSE LICENSED 6/19/01

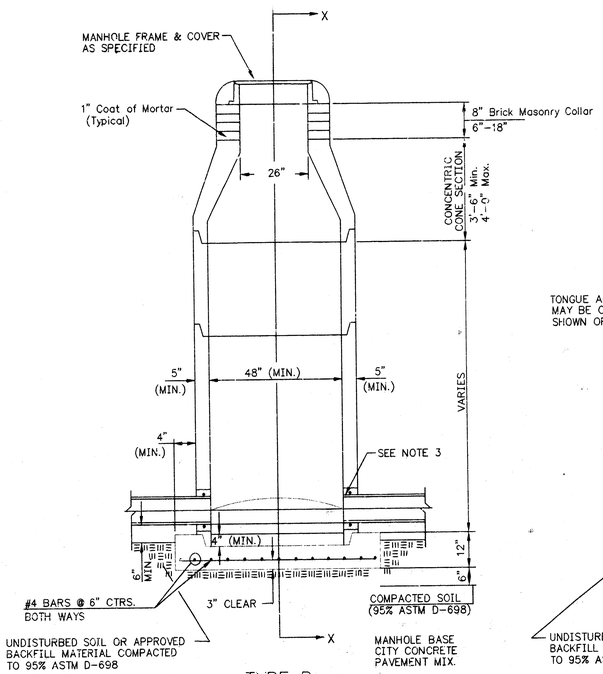
TITLE SHEET

SCALE:	APPROVED	DRAWN BY: F. A.
DATE:		CHECKED: B. K.
PROJECT NO		SHEET NO.: 1 OF 3

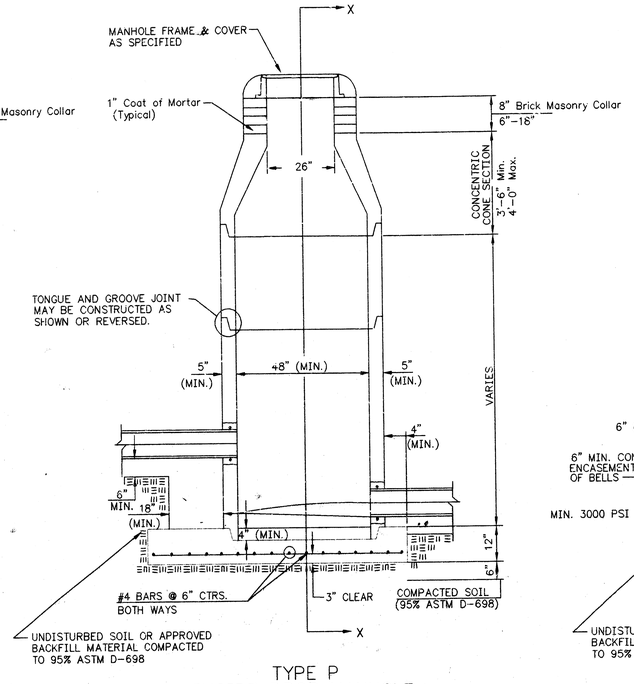
MUNICIPAL ENGINEERS
254-LAURA, SUITE 201
WICHITA, KANSAS 67211
316-262-3842

MICHAEL E. LINDEBAK, P.E., CITY ENGINEER

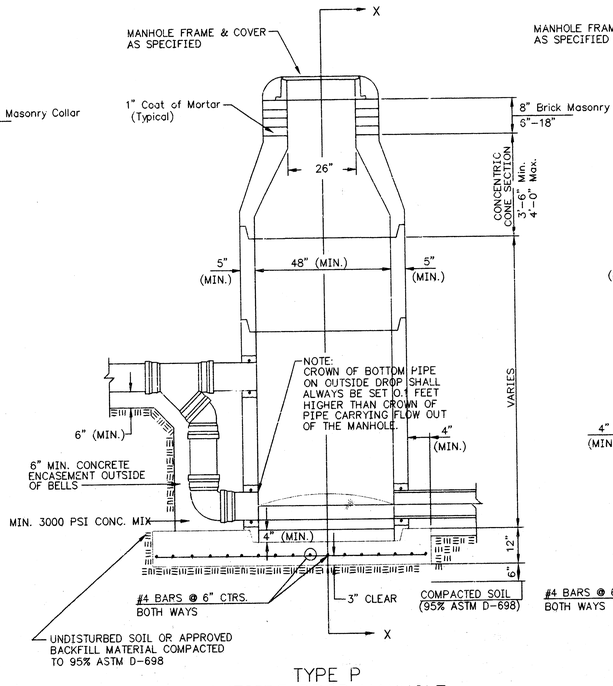
SEWER APPURTENANCES DETAILS



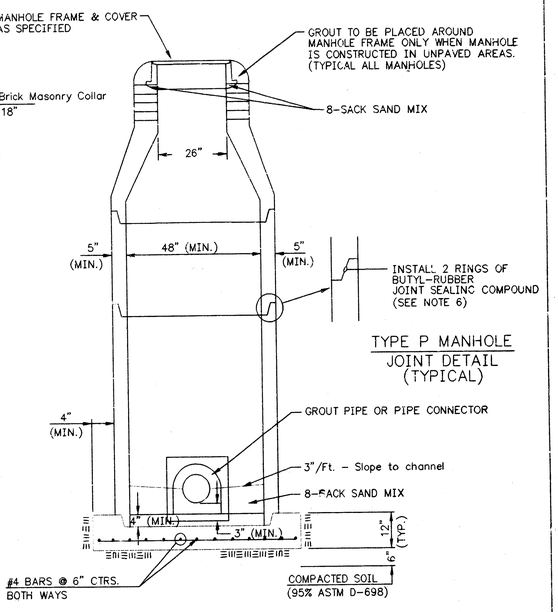
TYPE P
STANDARD MANHOLE



TYPE P
INSIDE DROP MANHOLE



TYPE P
OUTSIDE DROP MANHOLE



SECTION X
(TYPICAL)

GENERAL NOTES

PRECAST MANHOLE NOTES

1. ALL PRECAST CONCRETE MANHOLE SECTIONS SHALL CONFORM TO THE LATEST REVISIONS OF A.S.T.M. C478 AS MODIFIED BY THE SPECIFICATIONS.
2. NON-SHRINK GROUT SHALL BE NON-METALLIC TYPE.
3. APPROVED FLEXIBLE WATERSTOP GASKETS SHALL BE INSTALLED TO JOIN THE SEWER TO THE MANHOLE WALL WHEN A.B.S. COMPOSITE PIPE OR P.V.C. PIPE IS USED. FOR OTHER TYPES OF PIPE THE SEWER SHALL BE GROUTED IN PLACE WITH NON-SHRINK GROUT. THE SEWER PIPE SHALL BE SUPPORTED WITH CONCRETE ENCASEMENT A MINIMUM OF 3 FEET FROM THE MANHOLE WALL AND TO THE FIRST JOINT FOR V.C.P. SUCH THAT THE JOINT REMAINS FLEXIBLE.
4. ALL INSIDE SURFACES OF THE CONCRETE MANHOLE WHICH WOULD BE EXPOSED TO SEWER GAS SHALL BE COATED WITH 2 COATS TNEMEC SERIES 66 HI-BUILD EPOXOLINE, DRY THICKNESS OF 8 MILS (MIN.)
5. EXTERIOR MANHOLE WALLS SHALL BE COATED WITH 1 COAT MOBILARMA 633 BITUMINOUS COATING.
6. JOINT SEALING COMPOUND SHALL BE KENT SEAL NO. 2 OR APPROVED EQUAL.
7. PRECAST MANHOLES SHALL BE SET AT LEAST 4 INCHES INTO THE MANHOLE BASE.
8. TOP OF MANHOLE FLOOR SLAB SHALL BE AT LEAST 3 INCHES BELOW THE FLOW LINE OF THE OUTLET PIPE TO INSURE SUFFICIENT MINIMUM THICKNESS OF SHAPED INVERT.
9. LIFTING HOLES SHALL BE FILLED WITH NON-SHRINK GROUT AND THE INTERIOR SURFACE COATED AS SPECIFIED.
10. MORTAR USED IN MASONRY CONSTRUCTION SHALL CONTAIN 6 SACKS OF CEMENT PER CUBIC YARD. CONCRETE USED IN MANHOLE BASES SHALL CONFORM TO THE REQUIREMENTS OF CONCRETE FOR CONCRETE PAVEMENT CONSTRUCTION AS SPECIFIED IN THE CITY STANDARD PAVING SPECIFICATIONS USING CITY CONCRETE PAVEMENT MIX WITHOUT AIR ENTRAINING ADMIXTURE. MORTAR SHALL BE PLACED AROUND THE MANHOLE RING AS SHOWN ON THE DRAWINGS WHEN MANHOLES ARE CONSTRUCTED IN UNPAVED AREAS. MANHOLES CONSTRUCTED WHERE PIPE SIZES ARE SMALLER THAN 24" SHALL HAVE AN INSIDE DIAMETER OF 4'. MANHOLES CONSTRUCTED WHERE PIPE SIZES ARE 24" OR LARGER SHALL HAVE AN INSIDE DIAMETER OF 5'. COMPLETED MANHOLE SHALL BE WITHOUT LEAKS AND WATER TIGHT.
11. REINFORCING STEEL SHALL BE INSTALLED IN THE MANHOLE BASES AND SHALL CONSIST OF NO. 4 BARS PLACED ON 6" CENTERS IN BOTH DIRECTIONS. THE MANHOLE BASE REINFORCEMENT SHALL BE PLACED AT LEAST 3" ABOVE THE BOTTOM OF THE MANHOLE BASE. ALL COSTS FOR FURNISHING AND INSTALLING REINFORCING STEEL SHALL BE INCLUDED IN THE UNIT PRICE BID FOR THE MANHOLE.
12. OPENINGS SHALL BE CUT INTO THE MANHOLE WALL WHEN OUTSIDE DROPS ARE CONSTRUCTED ON EXISTING MANHOLES. SUCH OPENINGS CUT INTO EXISTING MANHOLES SHALL BE AS SMALL AS PRACTICAL TO FACILITATE INSTALLING AND GROUTING THE NEW PIPE IN PLACE. WATERSTOP GASKETS SHALL BE USED WITH P.V.C. AND A.B.S. COMPOSITE PIPE. THE NEW PIPE SHALL BE GROUTED INTO THE OPENING USING AN APPROVED NONSHRINK GROUT FOR THE FULL MANHOLE WALL THICKNESS. THE EXTERIOR OF THE COMPLETED CONNECTION SHALL BE SEALED WITH AN APPROVED BITUMINOUS COATING SUCH THAT THE CONNECTION WILL BE WATER TIGHT. FLOOR OF MANHOLE SHALL BE MODIFIED TO FORM NEW FLOW CHANNEL FOR THE NEW CONNECTION AS INDICATED BY THE DRAWING. THIS WORK, INCLUDING MODIFICATION OF MANHOLE FLOOR, SHALL BE PAID FOR AT THE UNIT PRICE BID FOR OUTSIDE DROP STACK CONSTRUCTED ON EXISTING MANHOLE.
13. THE FLOORS OF ALL MANHOLES SHALL BE SHAPED WITH FLOW CHANNELS SUCH THAT THE MANHOLES WILL BE SELF CLEANING AND FREE OF AREAS WHERE SOLIDS COULD BE DEPOSITED AS SEWAGE FLOWS THROUGH THE MANHOLE FROM ALL INLET PIPES TO THE OUTLET PIPE. FLOW CHANNELS SHALL BE FORMED TO MATCH THE BOTTOM HALVES OF THE INFLOWING PIPES AND THE OUTFLOWING PIPE AS SHOWN BY THE DRAWINGS EXCEPT FOR INSIDE DROP MANHOLES. FLOW CHANNELS FOR INSIDE DROP MANHOLES SHALL BE CONSTRUCTED AS INDICATED BY THE DRAWING. MANHOLE FLOORS SHALL HAVE SLOPES OF 3 INCHES PER FOOT IN THE AREAS OUTSIDE OF THE FLOW CHANNELS SLOPED TOWARD THE FLOW CHANNELS. PIPES LAID THROUGH MANHOLES SHALL HAVE THE TOP HALF REMOVED TO MEAT LINES FOR THE FULL INSIDE DIAMETER OF THE MANHOLE. MANHOLE FLOORS SHALL THEN BE SHAPED AROUND THE BOTTOM HALF OF THE PIPE WHICH FORMS THE FLOW CHANNEL.
14. PIPES INSTALLED WITHIN THE EXCAVATION MADE FOR THE MANHOLE SHALL BE CRADLED WITH CONCRETE TO THE LIMITS OF THE MANHOLE EXCAVATION. WHEN CLAY PIPE IS USED, THE CRADLE SHALL EXTEND TO THE FIRST JOINT OUTSIDE THE MAHOLE. THE CRADLE SHALL BE TERMINATED AT THE CLAY PIPE JOINT IN A MANNER WHICH WILL MAINTAIN THE FLEXIBILITY OF THE JOINT. COST OF CRADLE WITHIN MANHOLE EXCAVATION OR TO CLAY PIPE JOINTS ADJACENT TO MANHOLE SHALL BE INCLUDED IN THE UNIT PRICE BID FOR THE MANHOLE.
15. MANHOLE COVER CASTINGS AND MANHOLE FRAME CASTINGS SHALL CONFORM TO THE REQUIREMENTS AS INDICATED IN THE STANDARD SPECIFICATIONS AND AS SHOWN IN THE STANDARD DETAIL DRAWING.
16. THE VERTICAL DROP IN INSIDE DROP MANHOLES SHALL NOT EXCEED 2' FOR INFLOWING PIPES SIZED 12" OR SMALLER AND 2' FOR INFLOWING PIPES LARGER THAN 12". THE CROWNS OF INFLOWING PIPES SHALL NEVER BE SET LOWER THAN THE CROWN OF THE OUTFLOWING PIPE.
17. STANDARD MANHOLES AND STANDARD INSIDE DROP MANHOLES SHALL BE BID AS STANDARD MANHOLES FOR THE TYPE AND DIAMETER INDICATED. OUTSIDE DROP MANHOLES SHALL BE BID AS STANDARD OUTSIDE DROP MANHOLES FOR THE TYPE AND DIAMETER INDICATED. ALL MANHOLE DIAMETERS WILL BE 4' UNLESS INDICATED OTHERWISE.
18. A BRICK MASONRY COLLAR SHALL BE INSTALLED BETWEEN THE CAST IRON FRAME AND THE CONCENTRIC CONE. THE COLLAR WILL HAVE 8" WALLS AND A VERTICAL HEIGHT OF 6" MINIMUM AND 18" MAXIMUM. A 1" COAT OF MORTAR WILL BE PLASTERED ON THE OUTSIDE OF THE COLLAR. THE USE OF PRE-CAST CONCRETE SPACERS FOR MANHOLE TOP ADJUSTMENT IS ALSO ALLOWED.

THE CITY OF WICHITA
CITY ENGINEER'S OFFICE
CITY HALL - SEVENTH FLOOR
455 NORTH MAIN STREET
WICHITA, KANSAS 67202
(316) 268-4501
(316) 268-4114 FAX

STANDARD
TYPE 'P'
MANHOLES

M. E. LINDEBAK P.E. - CITY ENGINEER

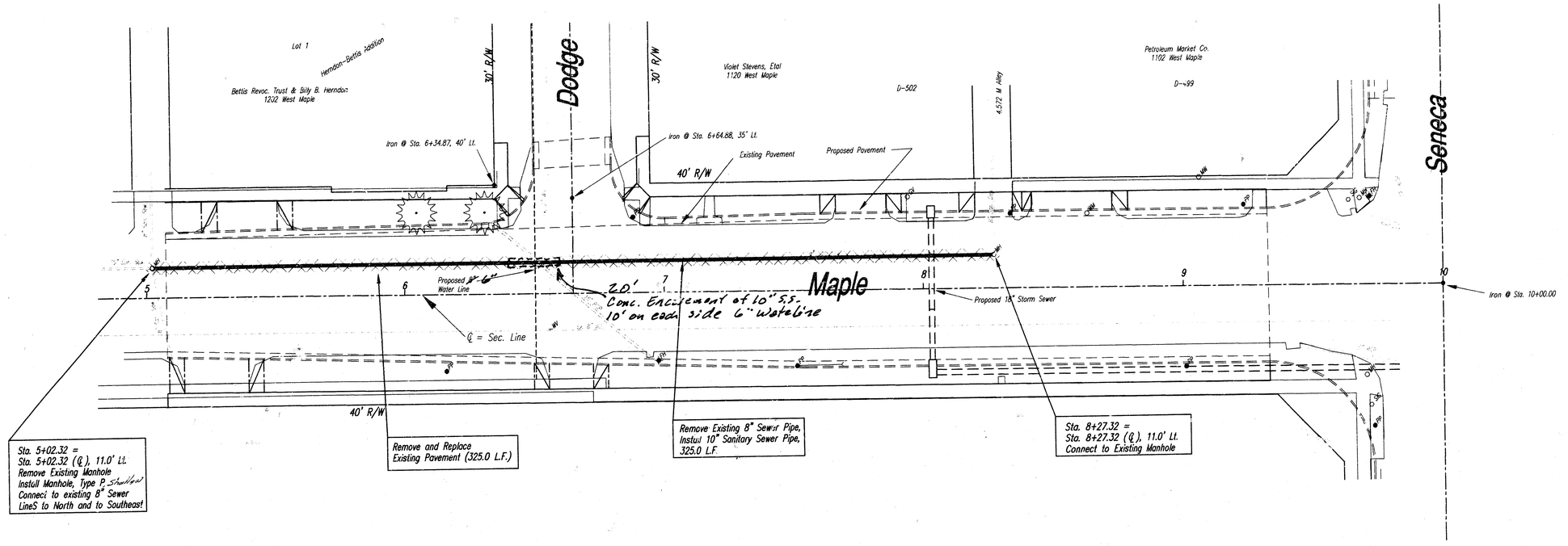
PROJECT NUMBER 468-82647
INDEX CODE
DATE
SHEET 2 OF 3

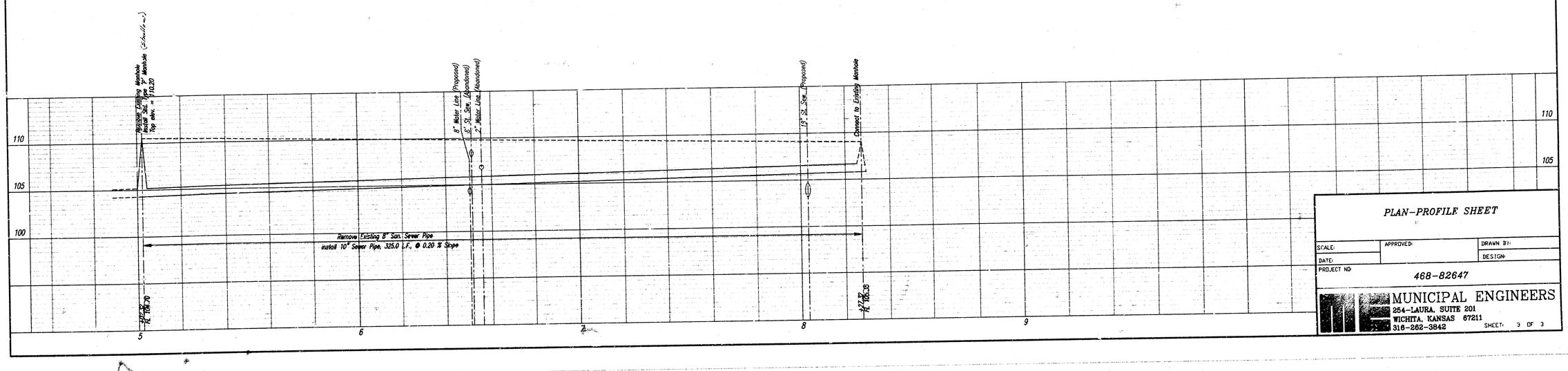
PMH.DWG

SCALE:

PLAN : 1" = 20'

PROFILE : 1" = 20' (H)
1" = 5' (V)





PLAN-PROFILE SHEET

SCALE:	APPROVED:	DRAWN BY:
DATE:		DESIGN:
PROJECT NO:	468-82647	

MUNICIPAL ENGINEERS
254-LAURA, SUITE 201
WICHITA, KANSAS 67211
316-262-3842