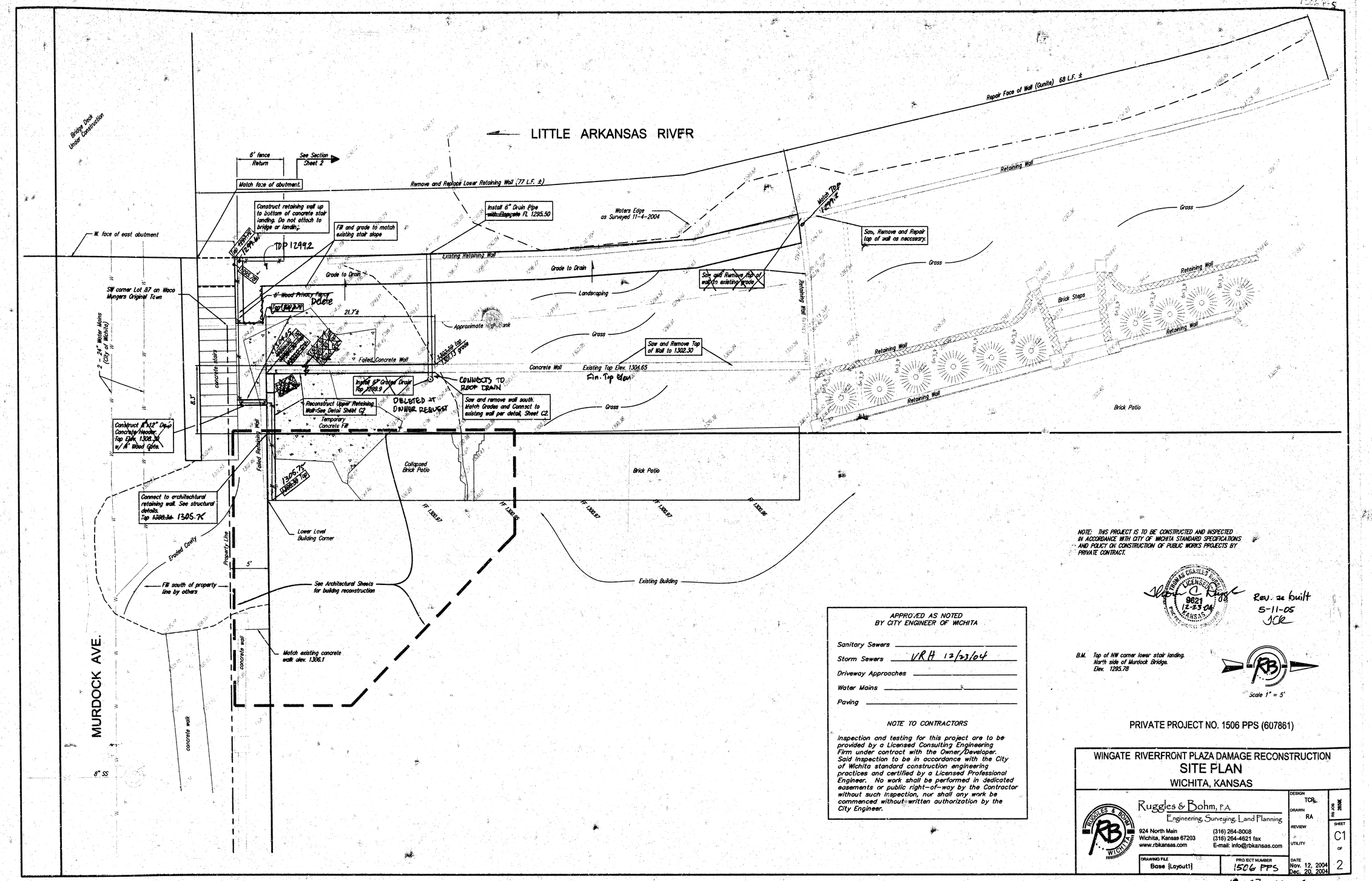

NOTE: THIS PROJECT IS TO BE CONSTRUCTED AND INSPECTED IN ACCORDANCE WITH CITY OF WICHITA STANDARD SPECIFICATIONS AND POLICY ON CONSTRUCTION OF PUBLIC WORKS PROJECTS BY PRIVATE CONTRACT.

THOMAS CHARLES RUGGLES LICENSED 9821 12-23-04 KANSAS PROFESSIONAL ENGINEER

Rev. as built 5-11-05 JCR

B.M. Top of NW corner lower stair landing. North side of Murdock Bridge. Elev. 1295.78

Scale 1" = 5'

APPROVED AS NOTED BY CITY ENGINEER OF WICHITA

Sanitary Sewers _____

Storm Sewers VRH 12/23/04

Driveway Approaches _____

Water Mains _____

Paving _____

NOTE TO CONTRACTORS

Inspection and testing for this project are to be provided by a Licensed Consulting Engineering Firm under contract with the Owner/Developer. Said Inspection to be in accordance with the City of Wichita standard construction engineering practices and certified by a Licensed Professional Engineer. No work shall be performed in dedicated easements or public right-of-way by the Contractor without such inspection, nor shall any work be commenced without written authorization by the City Engineer.

PRIVATE PROJECT NO. 1506 PPS (607861)

WINGATE RIVERFRONT PLAZA DAMAGE RECONSTRUCTION
SITE PLAN
WICHITA, KANSAS

Ruggles & Bohm, P.A.
Engineering, Surveying, Land Planning
924 North Main
Wichita, Kansas 67203
www.rbkansas.com
(316) 264-8008
(316) 264-4621 fax
E-mail: info@rbkansas.com

DESIGN	TCR
DRAWN	RA
REVIEW	
UTILITY	
DATE	Nov. 12, 2004 Dec. 20, 2004
SHEET	C1 OF 2
DRAWING FILE	Base (Layout1)
PROJECT NUMBER	1506 PPS

07 01 04

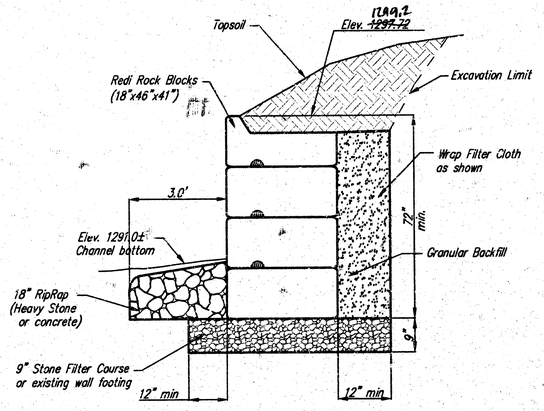

LOWER RETAINING WALL

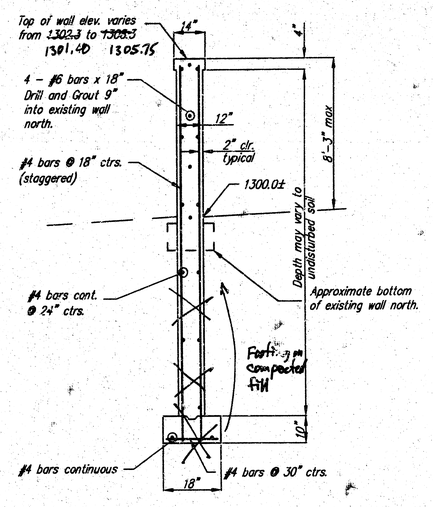

UPPER RETAINING WALL

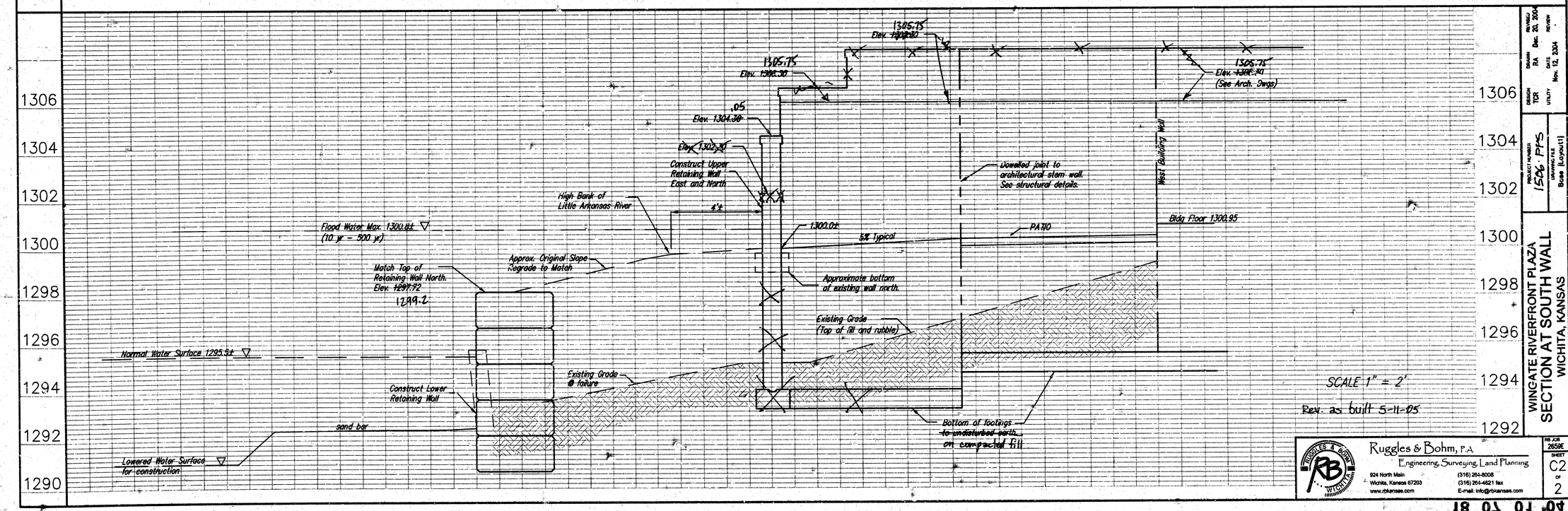

REVISED	Dec. 20, 2004
REVIEW	
DRAWN	RA
DATE	Nov. 12, 2004
DESIGN	TCR
UTILITY	
PROJECT NUMBER	1596.PFS
DRAWING FILE	Base (Layout1)

WINGATE RIVERFRONT PLAZA
SECTION AT SOUTH WALL
WICHITA, KANSAS

Ruggles & Bohm, P.A.
Engineering, Surveying, Land Planning
924 North Main
Wichita, Kansas 67203
www.rbkansas.com
(316) 264-8008
(316) 264-4621 fax
E-mail: info@rbkansas.com

RB JOB 2659E
SHEET C2 OF 2

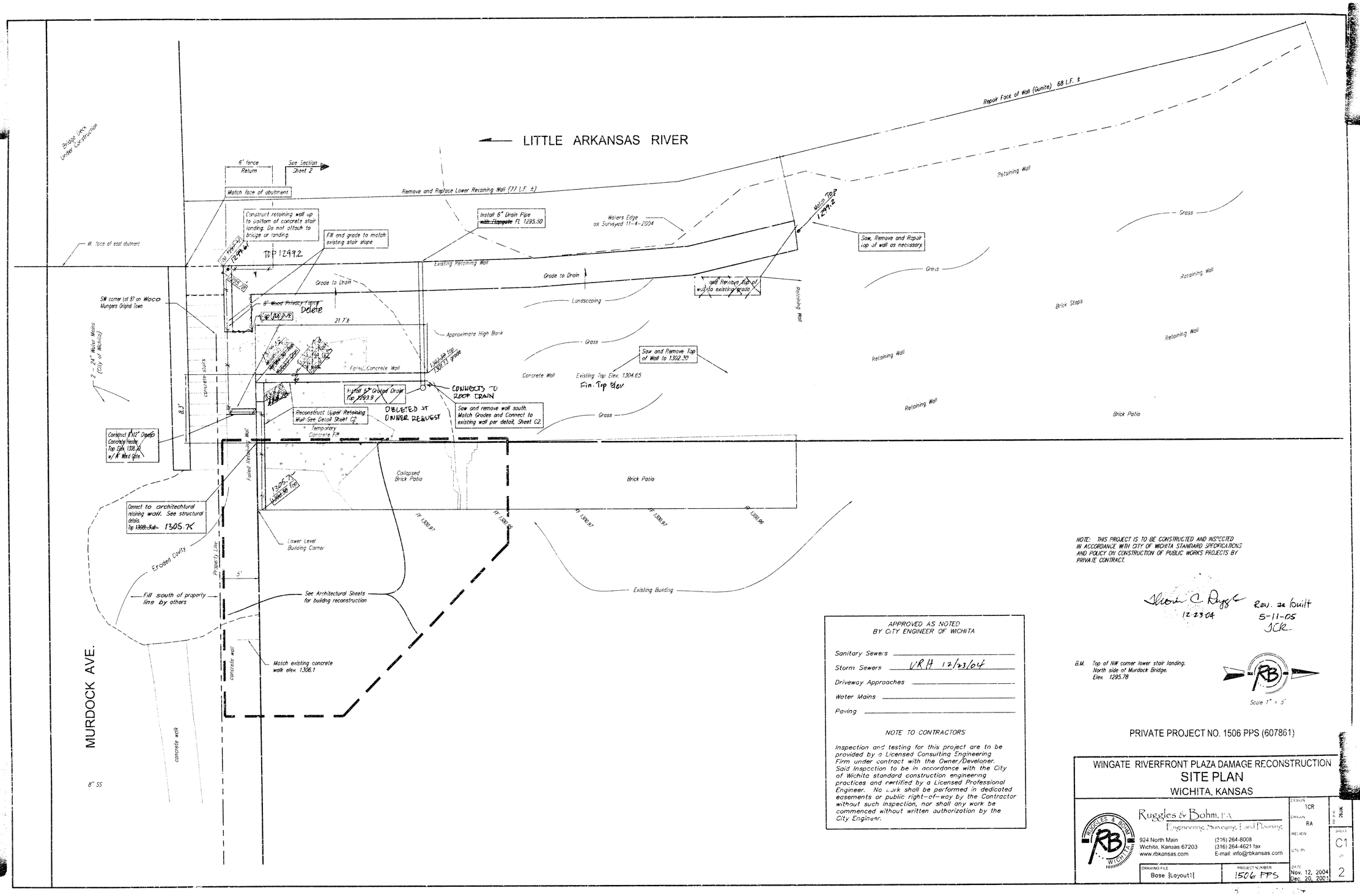

NOTE: THIS PROJECT IS TO BE CONSTRUCTED AND INSPECTED IN ACCORDANCE WITH CITY OF WICHITA STANDARD SPECIFICATIONS AND POLICY ON CONSTRUCTION OF PUBLIC WORKS PROJECTS BY PRIVATE CONTRACT.

Steven C. Ruggles 12-23-04

Rev. as built 5-11-05 JCR

B.M. Top of NW corner lower stair landing. North side of Murdock Bridge. Elev. 1295.78

Scale 1" = 5'

APPROVED AS NOTED BY CITY ENGINEER OF WICHITA

Sanitary Sewers _____

Storm Sewers VRH 12/23/04

Driveway Approaches _____

Water Mains _____

Paving _____

NOTE TO CONTRACTORS

Inspection and testing for this project are to be provided by a Licensed Consulting Engineering Firm under contract with the Owner/Developer. Said Inspection to be in accordance with the City of Wichita standard construction engineering practices and certified by a Licensed Professional Engineer. No work shall be performed in dedicated easements or public right-of-way by the Contractor without such inspection, nor shall any work be commenced without written authorization by the City Engineer.

PRIVATE PROJECT NO. 1506 PPS (607861)

WINGATE RIVERFRONT PLAZA DAMAGE RECONSTRUCTION
SITE PLAN
WICHITA, KANSAS

Ruggles & Bohm, P.A.
Engineering, Surveying, Land Planning
924 North Main
Wichita, Kansas 67203
www.rbkansas.com
(316) 264-8008
(316) 264-4621 fax
E-mail: info@rbkansas.com

DESIGN	TCR
DRAWN	RA
REVIEW	
UTILITY	
DATE	Nov. 12, 2004 Dec. 20, 2004
SHEET	C1
OF	2
DRAWING FILE	Base (Layout1)
PROJECT NUMBER	1506 PPS

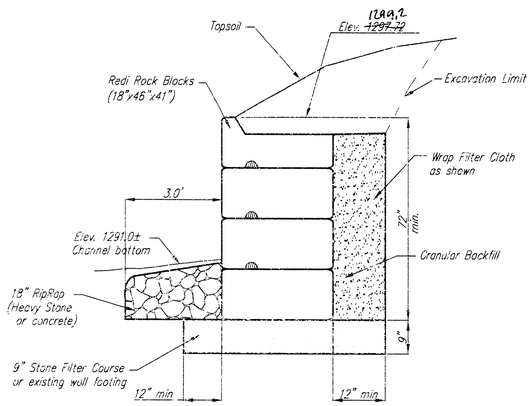

LOWER RETAINING WALL

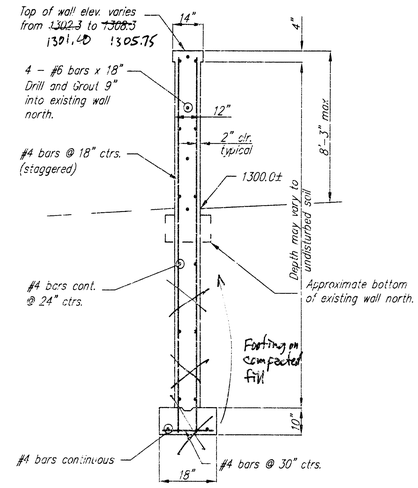

UPPER RETAINING WALL

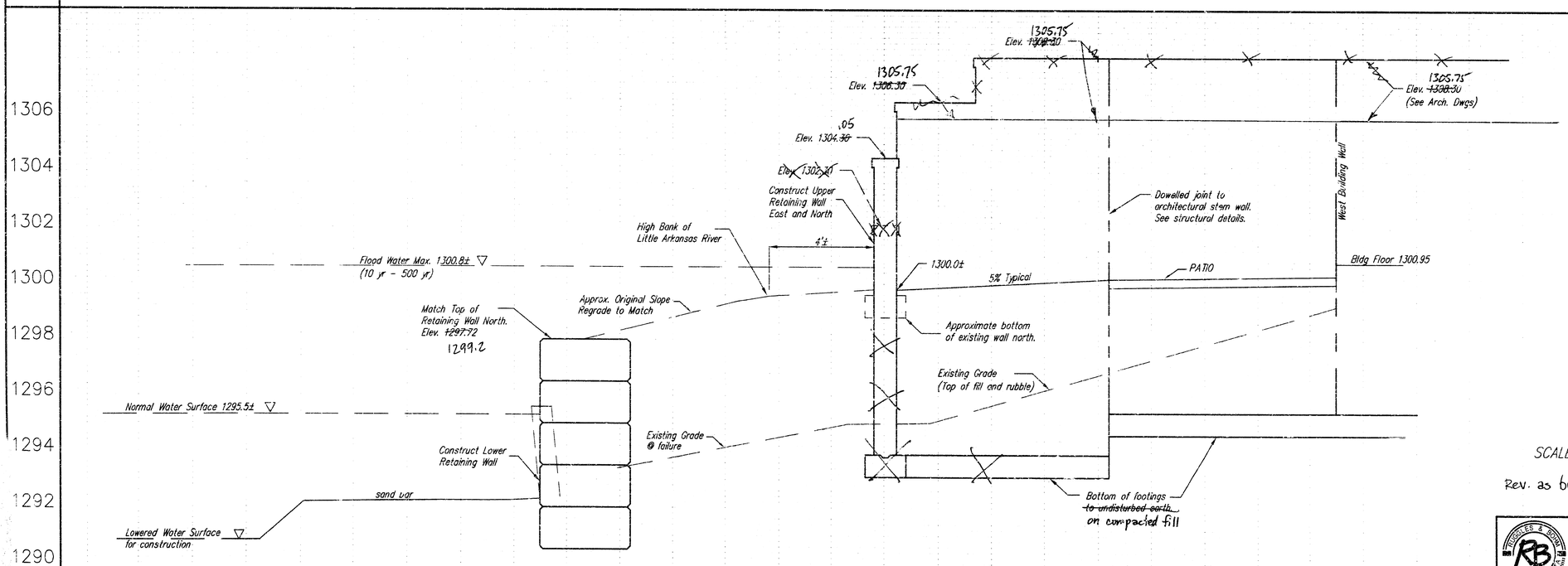

SCALE 1" = 2'

Rev. as built 5-11-05

DRAWN RA	REVISED Dec. 20, 2004
DESIGN TLCR	DATE Nov. 12, 2004
PROJECT NUMBER 15206 PPS	SHEET NUMBER Base Layout

WINGATE RIVERFRONT PLAZA
SECTION AT SOUTH WALL
WICHITA, KANSAS

Ruggles & Bohm, P.A.
Engineering, Surveying, Land Planning
924 North Main
Wichita, Kansas 67203
www.rbkansas.com
(316) 264-8008
(316) 264-4621 fax
E-mail: info@rbkansas.com

RB JOB 2659E
SHEET C2 OF 2

40 TO 01 8T