LATERAL 71, WAR INDUSTRIES SEWER

Project no. 468-76-245-81138-000-000-001

CITY OF WICHITA, KANSAS
MIKE E. LINDEBAK CITY ENGINEER

As Built
7-85

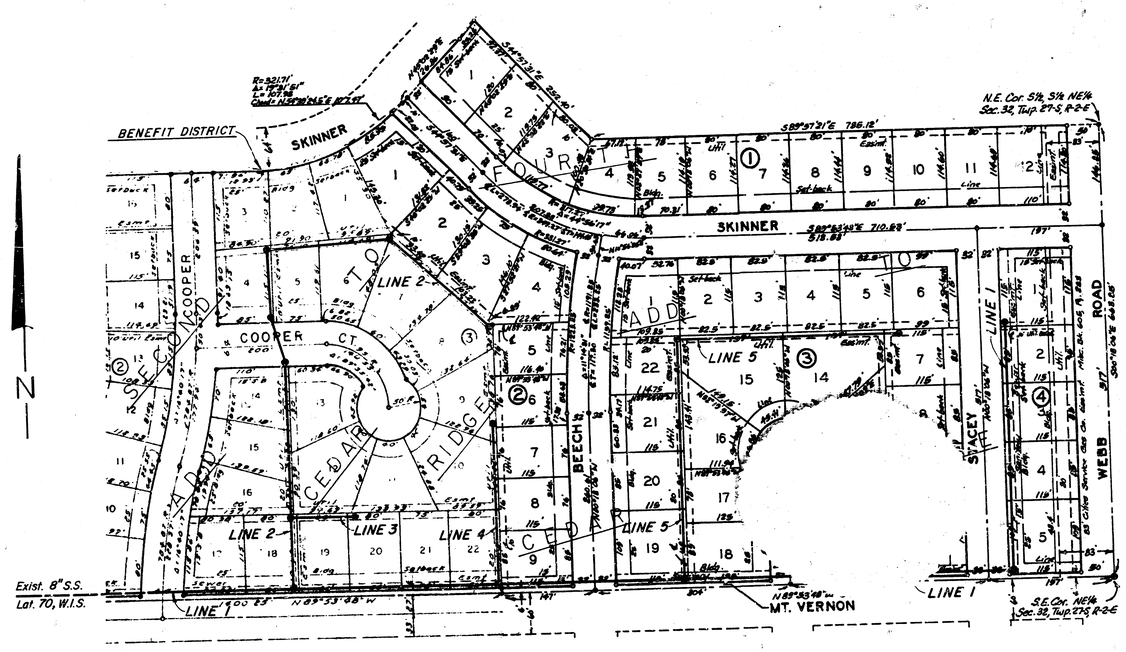

GENERAL NOTE

The Contractor shall be responsible for preserving property irons. The Contractor shall be required to re-establish any property irons which are destroyed or damaged by his construction operations. Such irons shall be re-established by a licensed land surveyor or a professional engineer in accordance with state laws.

M. BRENT WOOTEN LICENSED 8470 KANSAS PROFESSIONAL ENGINEER

MAY 1984

1 of 10

1/10

BAUGHMAN COMPANY, P.A.
SURVEYING & ENGINEERING
316/262-7271 • 338 LAURA • WICHITA, KANSAS 67211

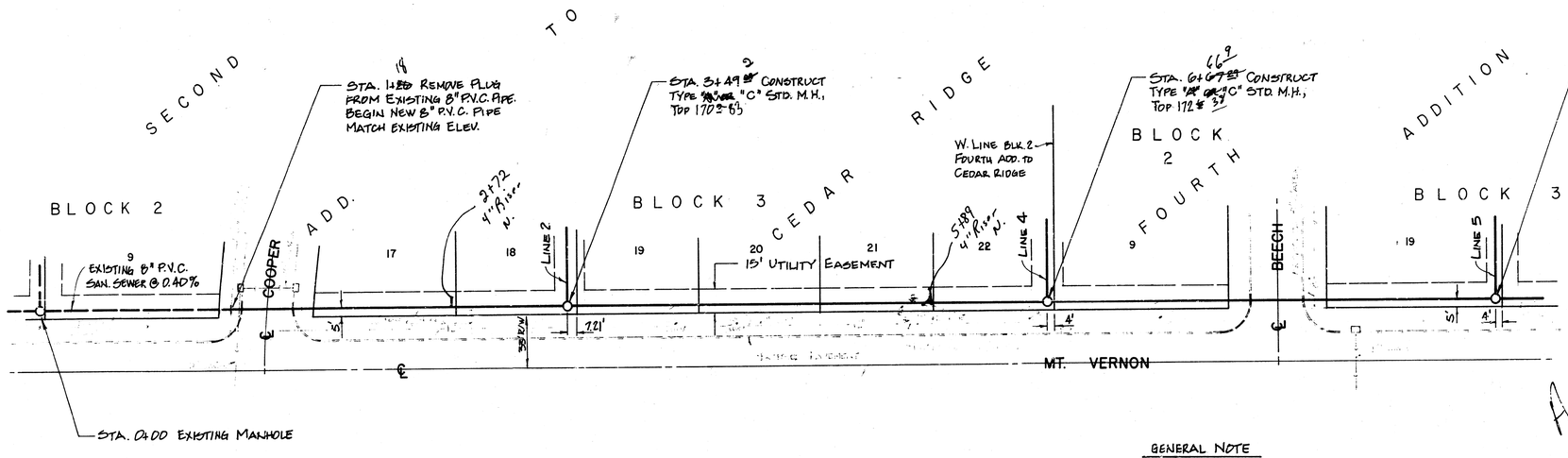

As Built 7-85 J.L.L.

GENERAL NOTE

TREES AND HEDGE TO BE REMOVED AS REQUIRED FOR CONSTRUCTION. COST OF REMOVAL SHALL BE INCIDENTAL TO L.F. OF PIPE.

BENCH MARK

CITY OF WICHITA STD. DISC 47' W. & 44' N. OF ℄ MT. VERNON & WEBB ROAD, ELEV. 182.48

SCALE

PLAN - 1" = 40'

PROFILE - 1" = 40' HORZ. 1" = 5' VERT.

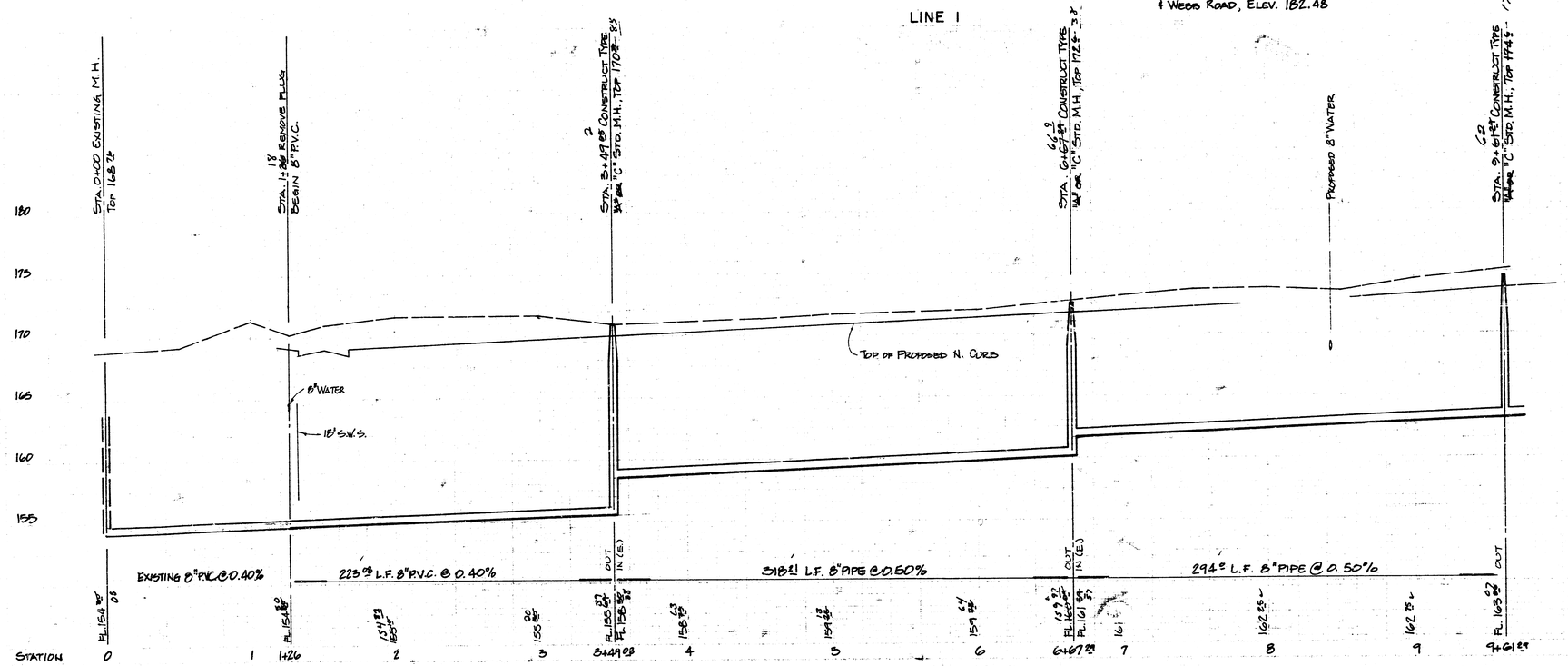

N. BRENT WOOTEN LICENSED 8470 KANSAS PROFESSIONAL ENGINEER

LATERAL 71
WAR INDUSTRIES SEWER

City of Wichita, Kansas

Project no. 468-76-245-81138-000-000-001

BAUGHMAN COMPANY, P.A.
SURVEYING & ENGINEERING
316/262-7271 • 330 LAURA • WICHITA, KANSAS 67213

2/10

2 of 10

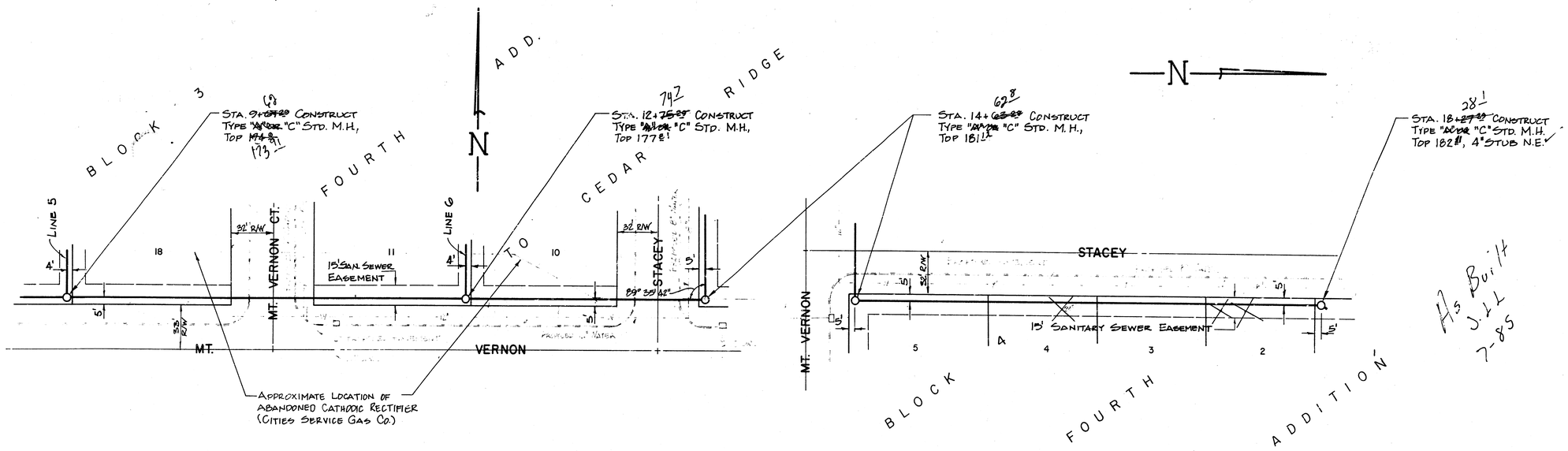

SCALE

PLAN - 1" = 40'

PROFILE - 1" = 40' HORZ.
1" = 5' VERT.

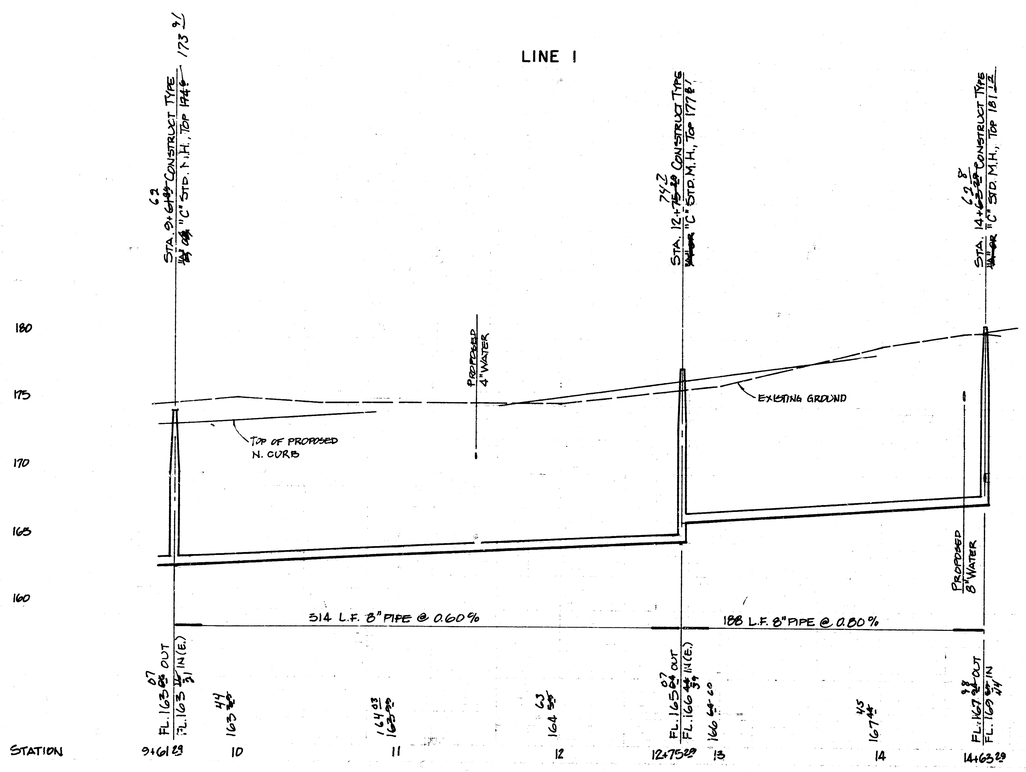

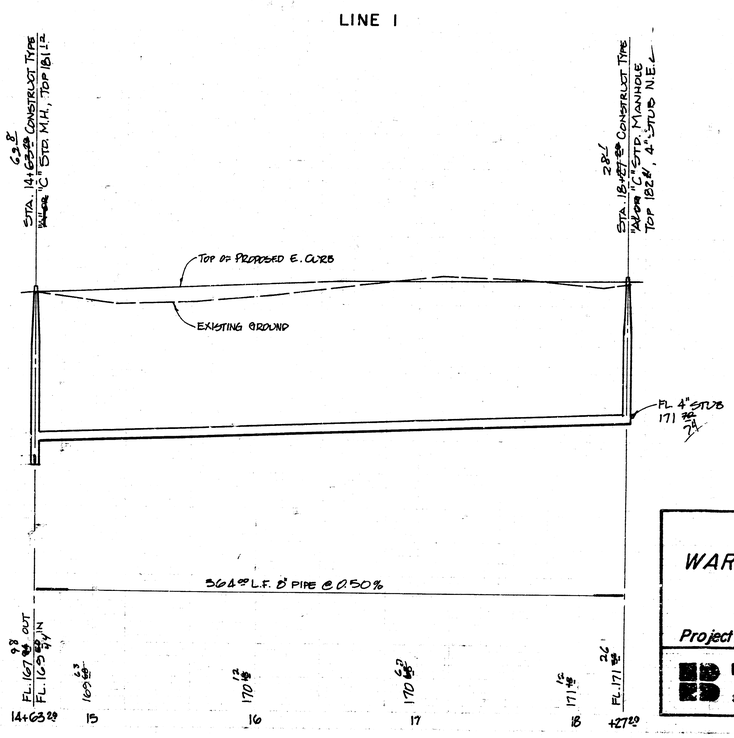

LATERAL 71
WAR INDUSTRIES SEWER

City of Wichita, Kansas

Project no. 468-76-245-81138-000-000-001

BAUGHMAN COMPANY, P.A.
SURVEYING & ENGINEERING
316/262-7271 • 330 LAURA • WICHITA, KANSAS 67211

3/10 3 OF 10

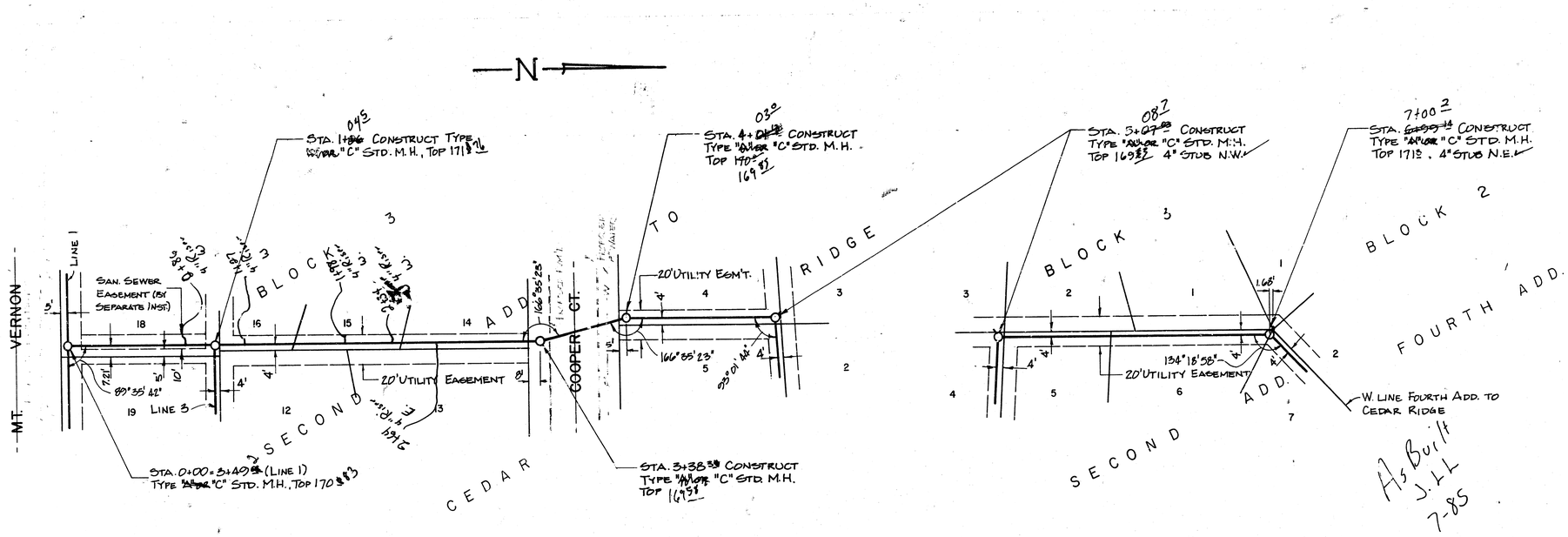

SCALE

PLAN - 1" = 40'

PROFILE - 1" = 40' HORZ.
1" = 5' VERT.

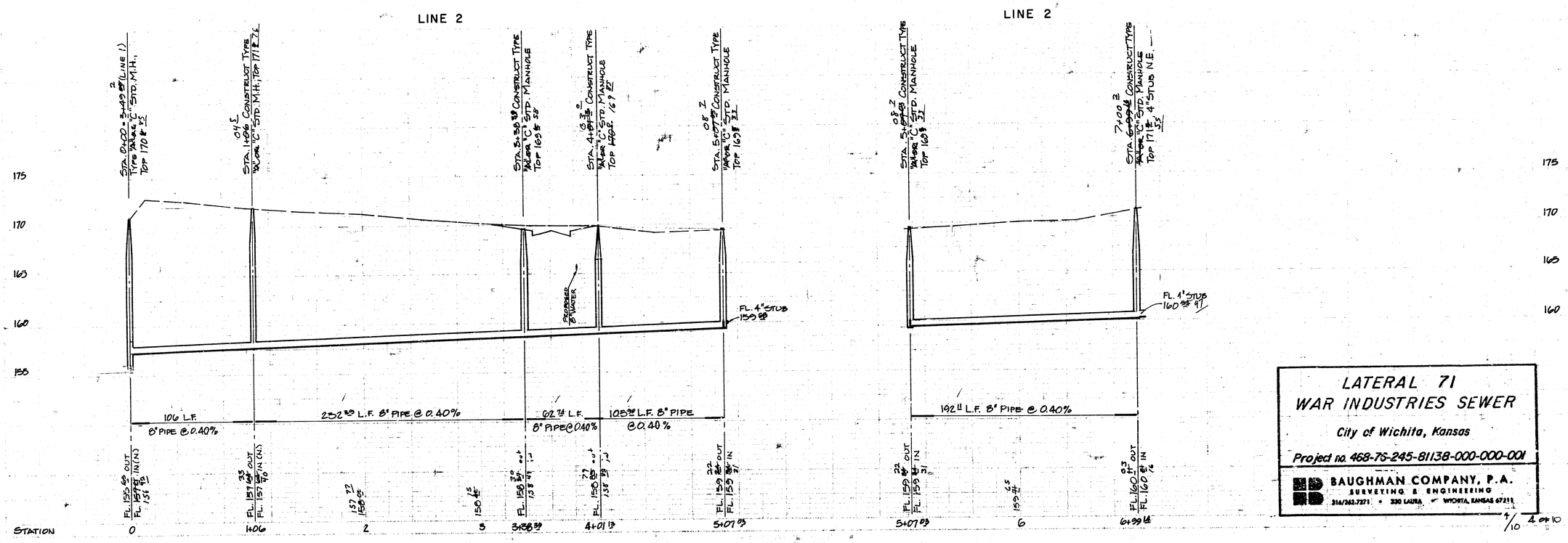

LATERAL 71
WAR INDUSTRIES SEWER

City of Wichita, Kansas

Project no. 468-75-245-81138-000-000-001

BAUGHMAN COMPANY, P.A.
SURVEYING & ENGINEERING
316/262-7271 • 330 LAURA • WICHITA, KANSAS 67211

4/10 4 of 10

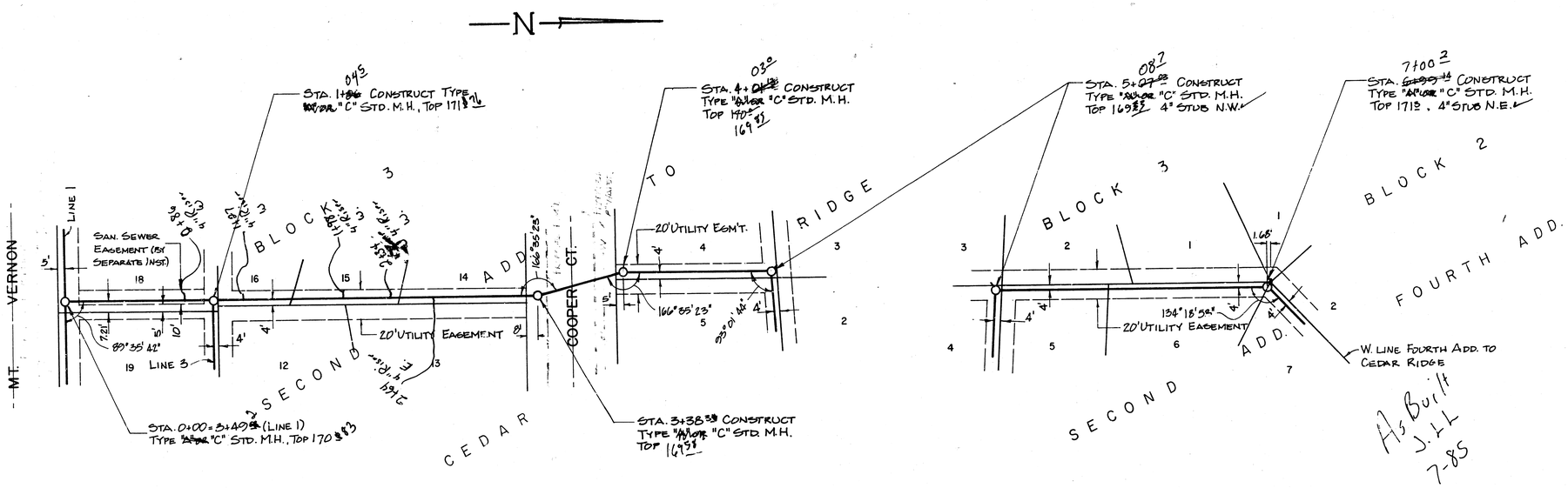

SCALE

PLAN - 1" = 40'

PROFILE - 1" = 40' HORZ.
1" = 5' VERT.

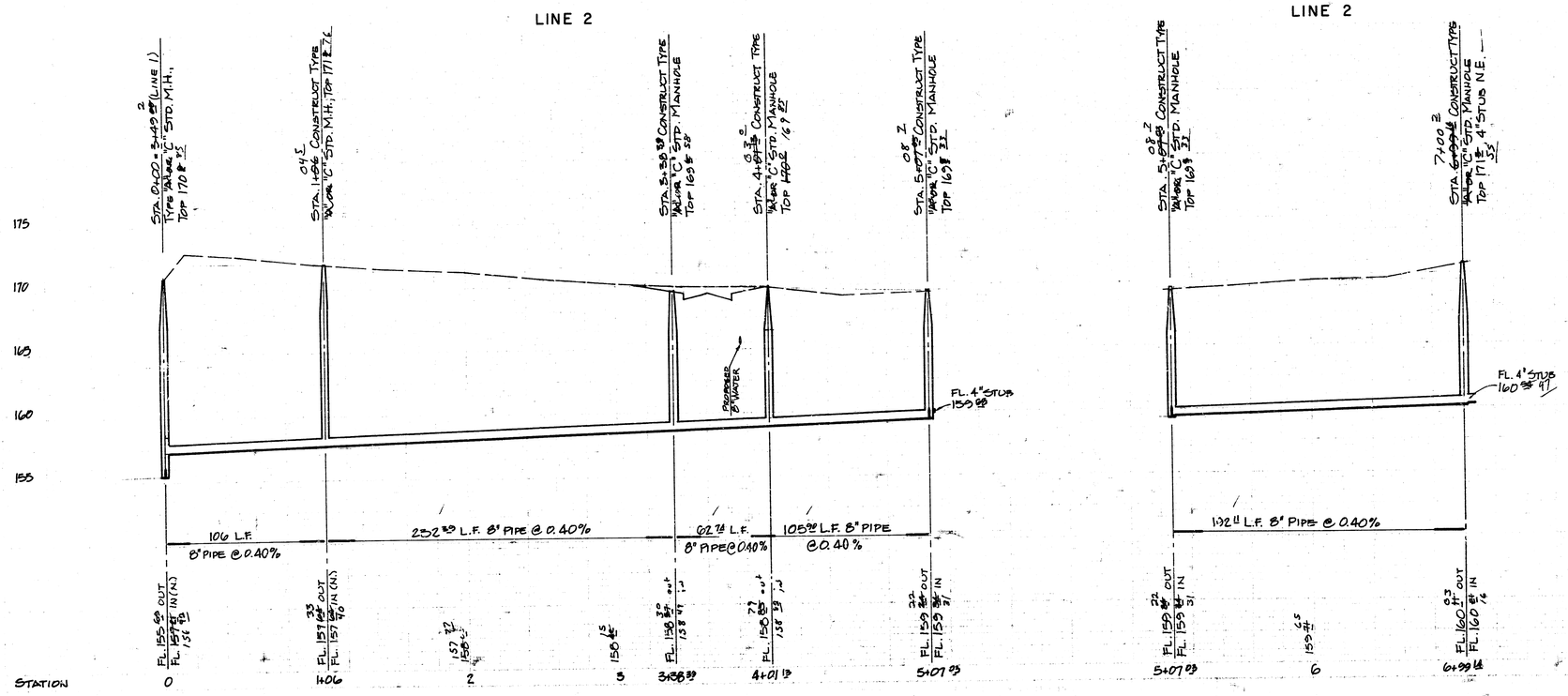

LATERAL 71
WAR INDUSTRIES SEWER

City of Wichita, Kansas

Project no. 468-76-245-81138-000-000-001

BAUGHMAN COMPANY, P.A.
SURVEYING & ENGINEERING
316/262-7271 • 330 LAURA • WICHITA, KANSAS 67211

4/10 4 of 10

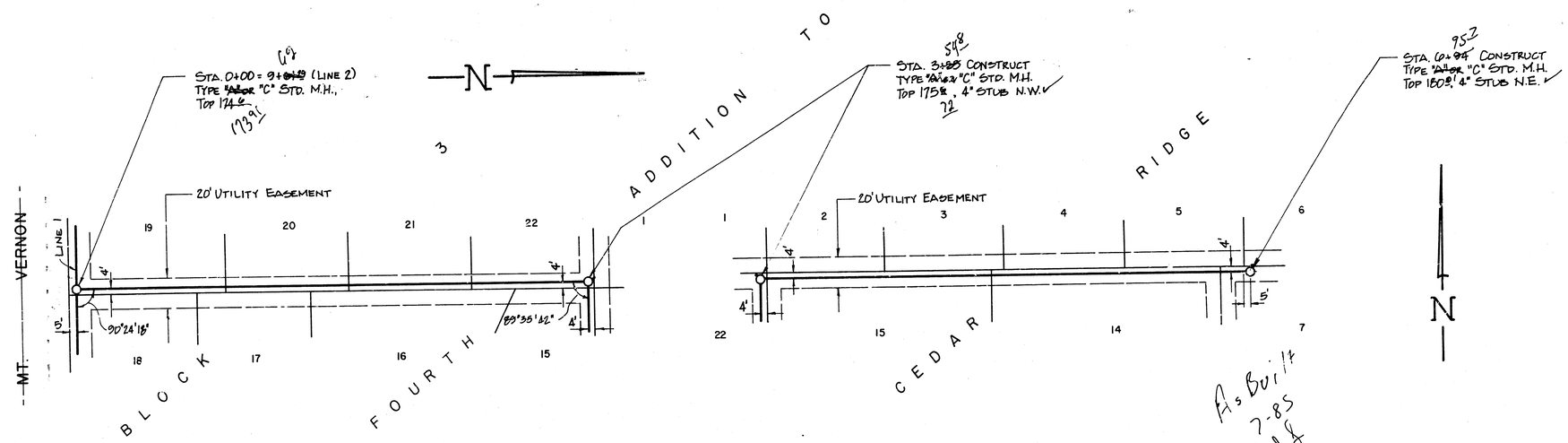

As Built 7-85

SCALE

PLAN - 1" = 40'

PROFILE - 1" = 40' HORZ.
1" = 5' VERT.

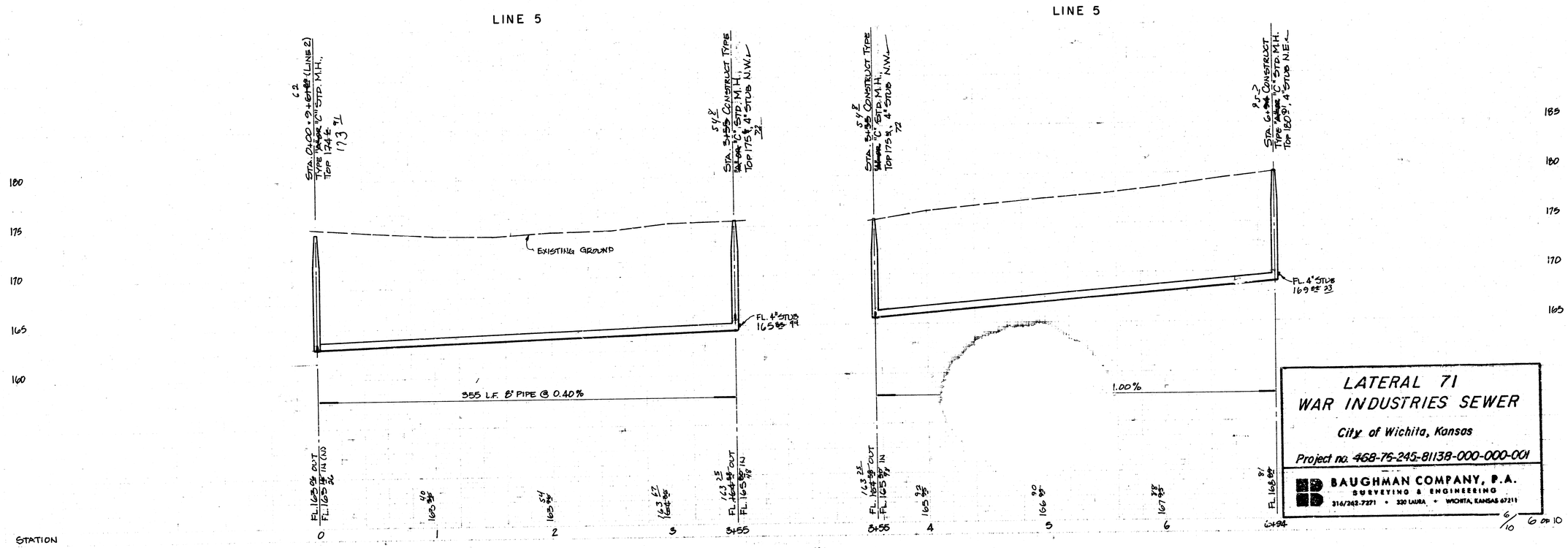

LATERAL 71
WAR INDUSTRIES SEWER

City of Wichita, Kansas

Project no. 468-76-245-81138-000-000-001

BAUGHMAN COMPANY, P.A.
SURVEYING & ENGINEERING
316/262-7271 • 330 LAURA • WICHITA, KANSAS 67211

6/10

6 of 10

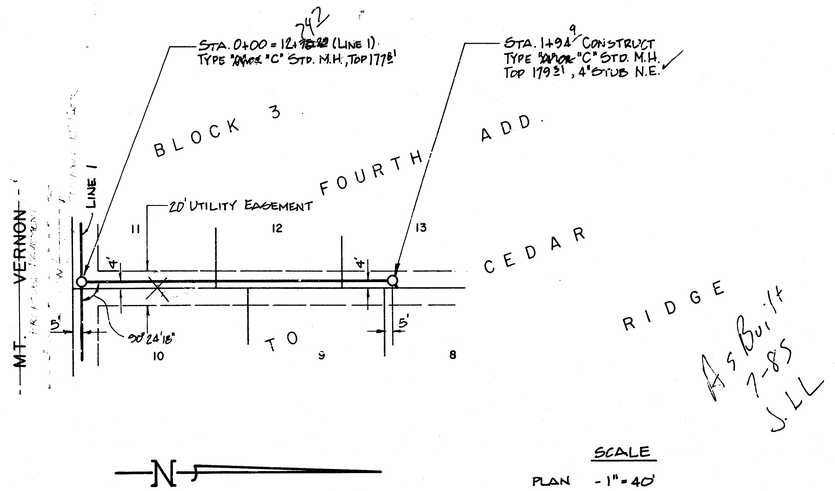

As Built 7-85 SLL

SCALE

PLAN - 1" = 40'

PROFILE - 1" = 40' HORZ.
1" = 5' VERT.

LINE 6

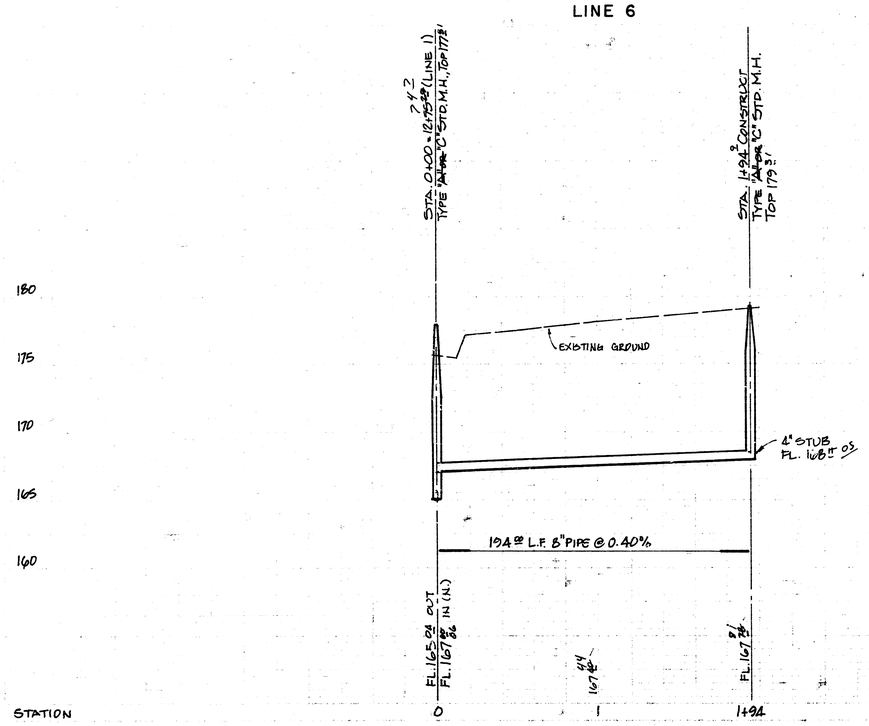

LATERAL 71
WAR INDUSTRIES SEWER

City of Wichita, Kansas

Project no. 468-76-245-81138-000-000-001

BAUGHMAN COMPANY, P.A.
SURVEYING & ENGINEERING
316/262-7271 • 330 LAURA • WICHITA, KANSAS 67211

REVISED APRIL, 1980

VERTICAL RISER DETAIL

ADOPTED AS STANDARD DESIGN BY

CITY OF WICHITA, KANSAS

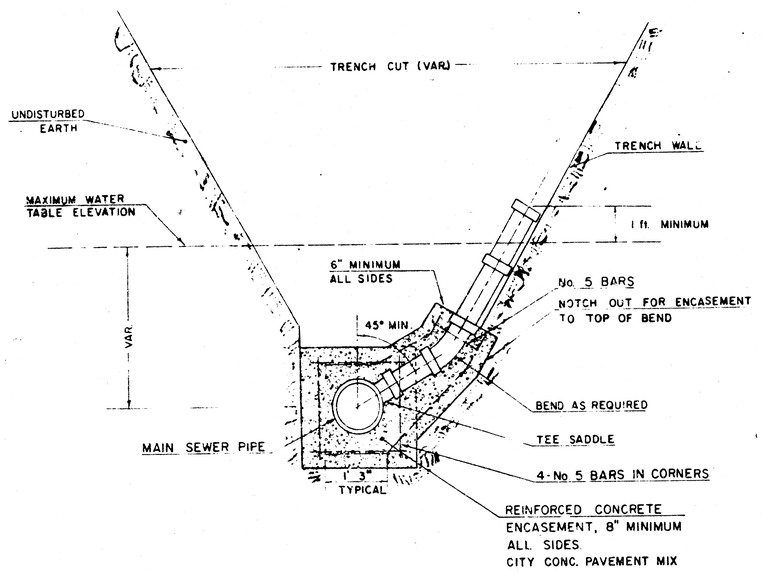

TYPICAL RISER FOR SLOPING TRENCH WALLS

NOTE:
TOP OF 4" OR 6" RISER PIPE TO BE EXTENDED TO AN ELEVATION OF 1 ft. MINIMUM ABOVE THE WATER TABLE ELEVATION, WHEN WATER EXISTS, OR TO AN ELEVATION SUITABLE FOR PROVIDING SERVICE TO THE LOT TO BE SERVED AND THEN PLUGGED.

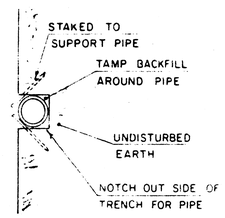

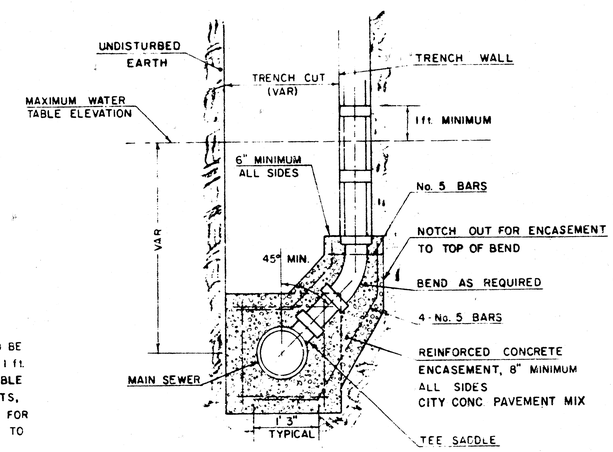

TYPICAL RISER FOR VERTICAL TRENCH WALLS

GENERAL NOTES

RISERS SHALL BE INSTALLED TO SERVE ALL LOTS OR TRACTS OF LAND ADJACENT TO THE MAIN SEWER LINE. WHEN ALL LOTS OR TRACTS CANNOT BE SERVED BY A SINGLE RISER, ADDITIONAL RISERS SHALL BE INSTALLED TO SERVE ADJACENT LOTS OR TRACTS. WHEN ALL LOTS OR TRACTS CANNOT BE SERVED BY A SINGLE RISER, ADDITIONAL RISERS SHALL BE INSTALLED TO SERVE DEVELOPED PROPERTY. WHEN A SINGLE RISER CANNOT BE INSTALLED TO SERVE DEVELOPED PROPERTY, ADDITIONAL RISERS SHALL BE INSTALLED AT THE EXPENSE OF THE PROPERTY OWNER. RISERS SHALL BE INSTALLED TO A DEPTH OF 4 FEET MINIMUM AS DETERMINED BY THE FIELD ENGINEER. MANHOLE PIPE STUBS AND SEWER LINES OF THE MAIN SEWER LINE SHALL NOT EXCEED 8 FT. MANHOLE PIPE STUBS SHALL NOT BE SET BELOW AN ELEVATION WHICH WILL PERMIT THE TOP OF THE INSIDE OF PIPE STUB TO MATCH THE TOP OF THE INSIDE OF THE MAIN SEWER PIPE. PIPE STUBS AND RISERS INSTALLED TO SERVE COMMERCIAL OR INDUSTRIAL PROPERTY SHALL BE 6 INCH. PIPE STUBS AND RISERS INSTALLED TO SERVE RESIDENTIAL PROPERTY MAY BE EITHER 4 INCH OR 6 INCH DEPENDING UPON THE AVAILABLE HEAD AND THE SIZE OF THE LOT AS DETERMINED BY THE FIELD ENGINEER. ENCASEMENT OF VITRIFIED CLAY MAIN SEWER PIPE SHALL EXTEND 10 FEET MINIMUM IN THE MAIN SEWER CLAY PIPE ON EACH SIDE OF THE RISER INSTALLATION. ENCASEMENT OF A.S.T.M. SDR 35 PLASTIC OR P.V.C. MAIN SEWER PIPE SHALL EXTEND A MINIMUM OF 5 FEET ON EACH SIDES OF THE CLAY ENCASEMENT OF THE RISER. FOUR INCH AND SIX INCH RISER PIPE SHALL BE ENCASED WITH CONCRETE TO THE TOP OF THE PIPE AS INDICATED ON THE DRAWINGS. FOUR INCH AND SIX INCH CLAY PIPE USED FOR RISERS SHALL BE EXTRA STRENGTH PIPE CONFORMING TO THE REQUIREMENTS OF THE LATEST REVISION OF A.S.T.M. DESIGNATION C700. COMPRESSION JOINTS AS SPECIFIED FOR CLAY PIPE IN THE STANDARD SPECIFICATIONS. FOUR INCH AND SIX INCH A.B.S. OR P.V.C. PIPE SHALL BE PIPE APPROVED FOR USE IN THE CITY BY THE CITY PLUMBING AND MECHANICAL INSPECTOR OR THE GENERAL INSPECTOR, DIVISION OF PUBLIC HEALTH AND ENVIRONMENTAL DEVELOPMENT. LOCATIONS OF THE RISERS SHALL BE MARKED BY FASTENING GREEN COLORED PLASTIC APPROXIMATELY 2 FEET ABOVE THE END OF THE RISER WHICH SHALL BE EXTENDED TO THE GROUND SURFACE AS THE EXCAVATION IS BACKFILLED SUCH THAT THE COLORED APPURTENANCE WILL BE VISIBLE WHEN THE PROJECT IS COMPLETED. THE ENDS OF THE RISER PIPE AND MANHOLE STUBS SHALL BE CAPPED BY PLUGGED USING FITTINGS FURNISHED BY THE MANUFACTURER OF THE PIPE. CONTRACTOR'S METHODS FOR INSTALLING AND BACKFILLING RISER PIPE SHALL BE APPROVED BY THE ENGINEER.

FURNISHING AND INSTALLING RISERS SHALL BE PAID FOR AT THE UNIT PRICES BID FOR 4" PIPE, 6" PIPE AND REINFORCED CONCRETE ENCASEMENT FOR THE VARIOUS MAIN SEWER PIPE SIZES INDICATED. THE PRICE BID SHALL INCLUDE ALL COSTS FOR COMPLETION OF THIS ITEM INCLUDING SADDLES, BENDS, CONCRETE, REINFORCING STEEL, CAPS OR PLUGS AND ALL OTHER NECESSARY MATERIALS OR WORK. CONCRETE ENCASEMENT OF THE RISER PIPE TO THE TOP OF THE BEND AS SHOWN ON THE DRAWINGS SHALL NOT BE PAID FOR DIRECTLY AND THE COST FOR THIS WORK SHALL BE CONSIDERED AS SUBSIDIARY TO THE OTHER ITEM OF WORK.

THE PROJECT INSPECTOR SHALL REPORT ON INSPECTOR CARDS THE LOCATION OF ALL RISERS CONSTRUCTED AS MEASURED FROM THE NEAREST MANHOLE, THE DIRECTION OF SERVICE, THE ELEVATION OF THE TOP OF THE RISER, AND THE PARTICULARITIES INVOLVED. THE PROJECT INSPECTOR SHALL ALSO REPORT ON INSPECTOR CARDS THE LOCATION, DIRECTION OF SERVICE, AND SIZE OF ALL STUBS INSTALLED IN MANHOLES.

LATERAL 71
WAR INDUSTRIES SEWER
City of Wichita, Kansas
Project no. 468-76-245/31138-000-000-001

BAUGHMAN COMPANY, P.A.
SURVEYING & ENGINEERING
316/262-7271 • 320 LAURA • WICHITA, KANSAS 67211

8/10

SECOND ADDITION TO CEDAR RIDGE

WICHITA, KANSAS

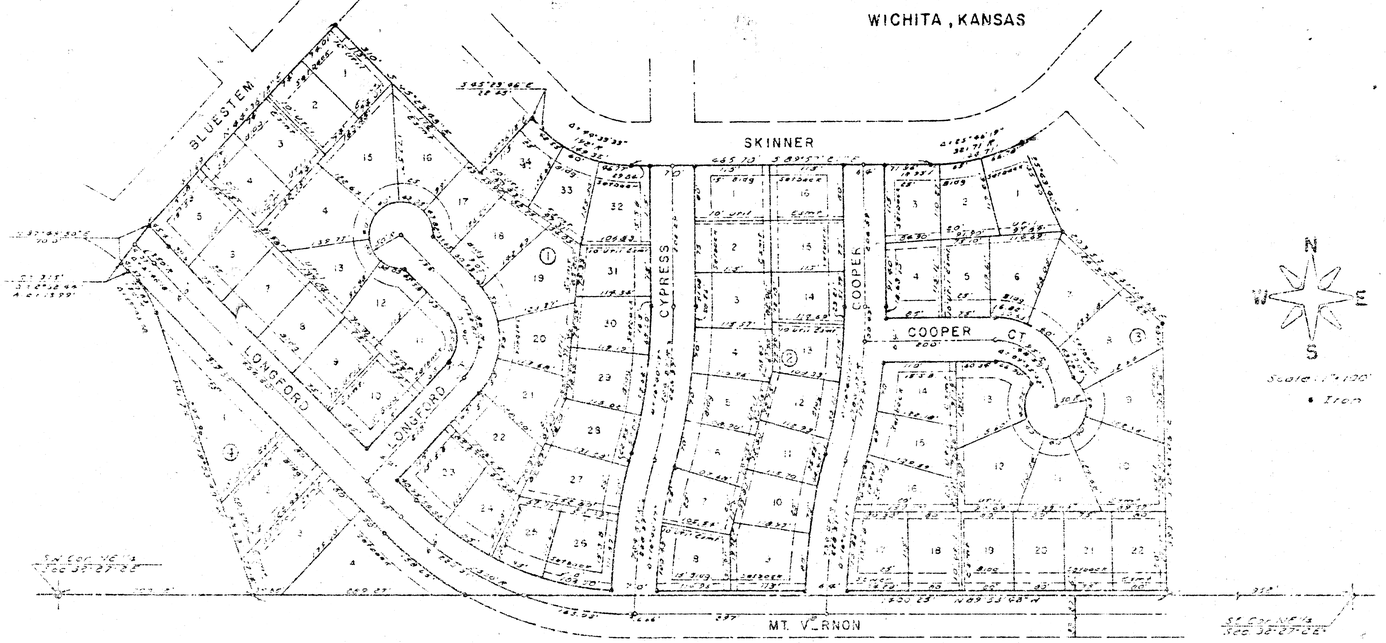

State of Kansas } S.S.
Sedgwick County }
We, Baughman Company, P.A., Surveyors in aforesaid county and state do hereby certify that we have surveyed and platted "SECOND ADDITION TO CEDAR RIDGE", Wichita, Kansas, and that the accompanying plat is a true and correct exhibit of the property surveyed, described as a replat of Lot 3, Blk. 8 of Fourth Addition to Cherry Creek Hills, Wichita, Kansas, and all that part of the NE ¼ of Section 32, T29S, R2E of the 6th P.M., Sedgwick County, Kansas, lying south and east of the Fourth Addition to Cherry Creek Hills, Wichita, Kansas, south of First Addition to Cedar Ridge, Wichita, Kansas; east of Hedgecliff Addition, Wichita, Kansas; and west of the following described line: Beginning at a point on the south line of said NE¼, said point being 952 feet west of the SE corner thereof; thence N0°18'05"W, parallel with the east line of said NE¼, 395 feet; thence N47°38'48"W, 203.54 feet; thence N25°43'40"W, 195.30 feet to the south line of Skinner St. as platted in said First Addition to Cedar Ridge.

Date June 12, 1981 Baughman Company, P.A.

John E. Lundstrom — Surveyor

Know all men by these presents, that we, the undersigned, have caused the land described in the surveyors certificate to be platted into lots, blocks and streets to be known as "SECOND ADDITION TO CEDAR RIDGE", Wichita, Kansas. The easements are hereby granted as indicated for the construction and maintenance of public utilities. The streets are hereby dedicated to and for the use of the public.

Cherry Creek Development, Inc.

Clifford A. Nies — President

State of Kansas } S.S.
Sedgwick County }
The foregoing instrument was acknowledged before me this 10 day of June, 1981, by Cherry Creek Development, Inc., by Clifford A. Nies, President. In testimony whereof, I have hereunto set my hand and affixed my notarial seal the day and year above written.

Notary Public
My Commission Expires 5-12-

This plat of "SECOND ADDITION TO CEDAR RIDGE", Wichita, Kansas, has been submitted to and approved by the Wichita-Sedgwick County Metropolitan Area Planning Commission, Wichita, Kansas. Dated this 7th day of July, 1980.

Wichita-Sedgwick County Metropolitan Area Planning Commission

William L. Kahrs — Chairman

Robert A. Larkin — Secretary

This plat approved and all dedications shown hereon accepted by the Board of City Commissioners, Wichita, Kansas, this ____ day of ____, 1981.

Mayor

City Clerk

This plat approved and all dedications shown hereon accepted by the Board of County Commissioners, Sedgwick County, Kansas, this 1st day of July, 1981

Chairman

Commissioner

Commissioner

County Clerk

Entered on transfer record this 1st day of July, 1981

County Clerk

State of Kansas } S.S.
Sedgwick County }
This is to certify that this plat has been filed for record in the Office of the Register of Deeds this ____ day of ____, 1981, at ____ o'clock ____ M., and is duly recorded.

Register of Deeds

Deputy

FOURTH ADDITION TO CEDAR RIDGE

WICHITA, KANSAS

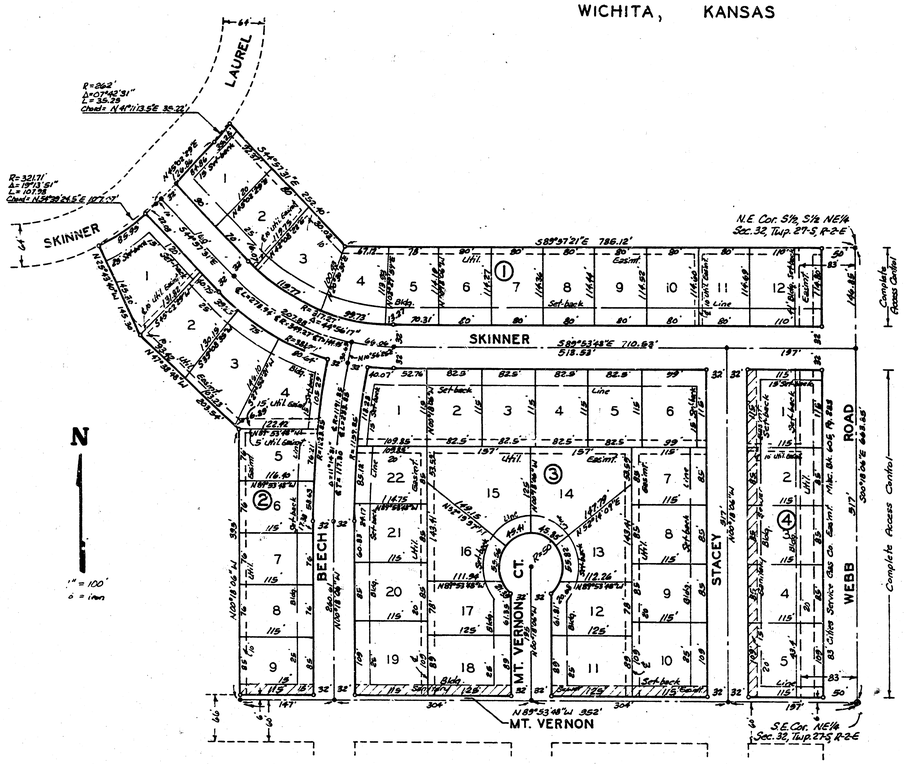

State of Kansas } S.S.
Sedgwick County }

We, Baughman Company, P.A. Surveyors in aforesaid county and state do hereby certify that we have surveyed and platted "FOURTH ADDITION TO CEDAR RIDGE" Wichita Kansas and that the accompanying plat is a true and correct exhibit of the property surveyed, described as and being a replat of Lot 1, Block 2 and Lots 1 and 2, Block 3 and part of Skinner as platted in First Addition to Cedar Ridge, Wichita Kansas and part of the S½ of the NE¼ of Sec. 32, Twp. 27-S, R-2-E of the 6th. P.M., Sedgwick County, Kansas, all being described as follows:

Beginning at the S.E. Corner of said NE¼; thence N 89°53'48"W, along the south line of said NE¼ 952 feet; thence N 00°18'06"W, parallel with the east line of said NE¼ 395 feet; thence N 47°38'48"W, 203.54 feet; thence N 25°43'40"W, 145.30 feet to a point on a curve to the left, having a radius of 321.71 feet, a central angle of 19°13'51" and an arc length of 107.98 feet; thence northeasterly along said curve, having a chord bearing N 54°39'24.5"E, 107.47 feet to the point of tangency of said curve; thence N 45°02'29"E, along the tangent of said curve, 126.86 feet to the point of curvature of a curve to the left, having a radius of 262 feet; thence northeasterly along said curve, through a central angle of 07°42'31", an arc distance of 35.25 feet and having a chord bearing N 41°11'13.5"E, 35.22 feet; thence N 44°57'31"E, 252.40 feet to a point on the north line of the S½ of the S½ of said NE¼; thence S 89°57'21"E, along the north line of the S½ of the S½ of said NE¼, 785.12 feet, to the NE. Corner thereof; thence S 00°18'06"E, 663.85 feet to the place of beginning. Skinner Street being vacated by virtue of K.S.A. 12-512(b).

Baughman Company, P.A.

1-19-84
Date

William L. Korber — Surveyor

Know all men by these presents, that we the undersigned, have caused the land described in the surveyors certificate to be platted into Lots, Blocks and Streets to be known as "FOURTH ADDITION TO CEDAR RIDGE" Wichita, Kansas. Easements are hereby granted as indicated for the construction and maintenance of all public utilities. The streets are hereby dedicated to and for the use of the public. All abutters rights of access to or from Webb Rd. over and across the east line of Lot 12, Block 1, and the east line of Lots 1, 2, 3, 4 and 5, Block 2, are hereby granted to the City of Wichita, Kansas.

Cherry Creek Development, Inc.

Clifford A. Nies — President

Equitable Owner
Red Oaks, Inc.

Stephen Russell — President

This plat of "FOURTH ADDITION TO CEDAR RIDGE" Wichita Kansas, has been submitted to and approved by the Wichita-Sedgwick County Metropolitan Area Planning Commission, Wichita, Kansas.
Dated this 22nd day of March 198 .

Wichita-Sedgwick County Metropolitan Area Planning Commission.

Robert E. Chisham — Chairman

Robert A. Lakin — Secretary

This plat approved and all dedications shown hereon accepted by the Board of Commissioners of Wichita, Kansas, this 3rd day of April 1984.

Margaret Wright — Mayor

Donald E. Gisick — City Clerk

This plat approved and all dedications shown hereon accepted by the Board of Commissioners of Sedgwick County, Kansas, this ____ day of ____ 198__.

Jack Spratt — Chairman

Donald E. Gragg — Commissioner

Tom Scott — Commissioner

Dorothy K. White — County Clerk

Entered on transfer record this ____ day of ____ 198__.

Dorothy K. White — County Clerk

State of Kansas } S.S.
Sedgwick County }

This is to certify that this plat has been filed for record in the office of the Register of Deeds, this ____ day of ____ 198__, at ____ o'clock ____ M; and is duly recorded.

Bette F. McCart — Register of Deeds

Pat Kettler — Deputy

State of Kansas } S.S.
Sedgwick County }

The foregoing instrument was acknowledged before me, this 3rd day of February 1984, by Clifford A. Nies, President of Cherry Creek Development, Inc., on behalf of the corporation and by Stephen Russell, President of Red Oaks, Inc., on behalf of the corporation.

Mark A. Savey — Notary Public

My Appt. Exp. 12 May 1984

FOURTH ADDITION TO CEDAR RIDGE 10 of 10 10/10