Lat. 18, Main 13, S.W.I.

SANITARY SEWER IMPROVEMENTS

to serve

LARK 6TH ADDITION - PHASE II

CITY OF WICHITA, KANSAS

Michael E. Lindebak, P.E. City Engineer

Project Number

468-82794

Index Code:

743427

Vicinity Map

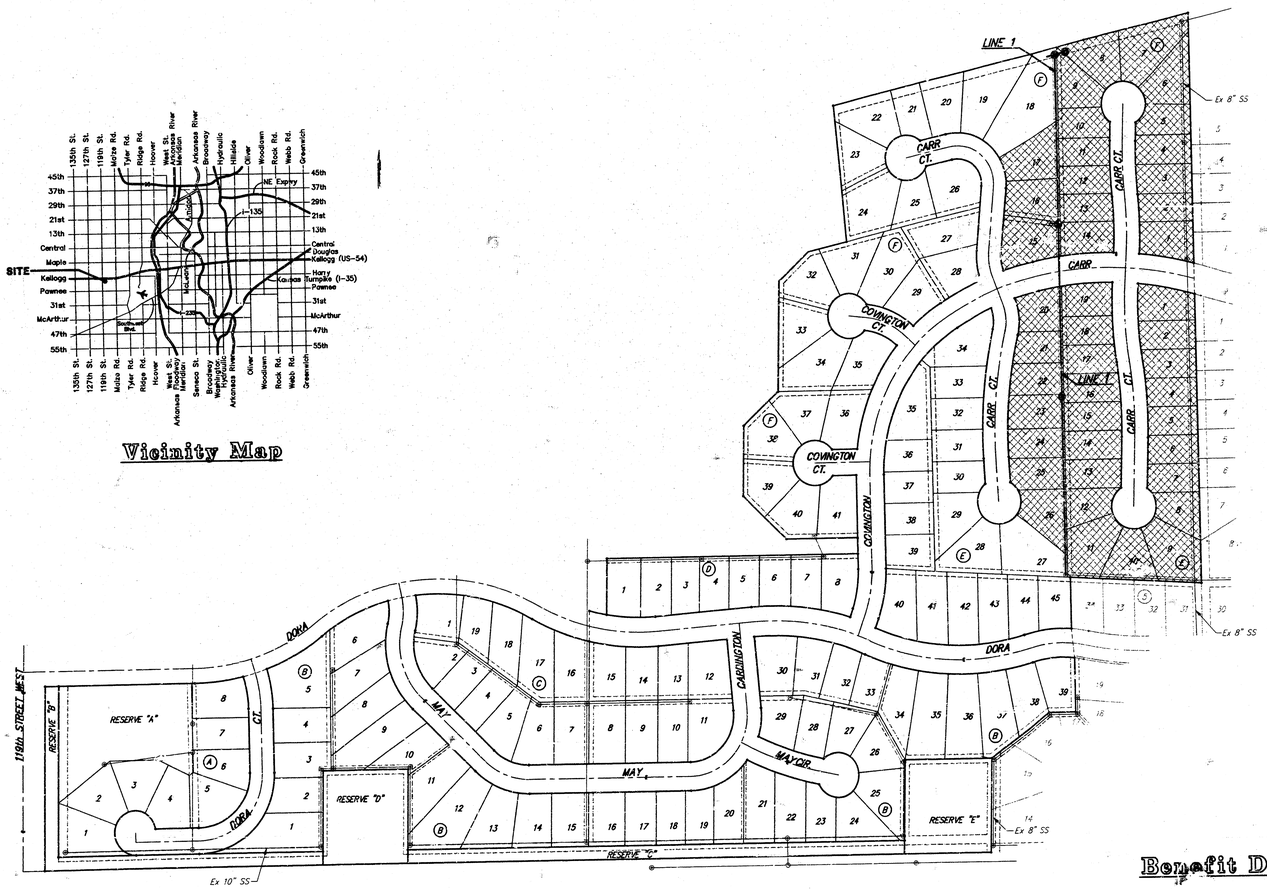

Scale: 1" = 150'

Benchmark

R.R. Spike in East Side of P.P. Located 112.5' North of the North R/W of Dora and 41.5' East of the ℄ of 119th St W. Elev. = 145.26 (City Datum)

V-Notch Cut in Curb at the Northwest Corner of Lot 1, Block 5, Lark 3rd Addition. Elev. = 145.48 (City Datum)

Approximate Easement Grading Quantities:
(For Information Only)
Excavation: 109 C.Y.
Fill: 707 C.Y.

Benefit District

Booked 8/3/98 P-23 RDL

GENERAL NOTES:

1. Contractor will be required to provide notice to utility companies a minimum of twenty-four (24) hours prior to any excavation, as follows:

   Kansas One-Call 687-2470

   The Contractor must notify the following in case of an emergency:

Multimedia Cablevision	262-0661
K.P.L. Gas Service Company	383-8650
Kansas Gas & Electric Company	383-8600
Peoples Gas Company	242-8350
Southwestern Bell Telephone Company	1-571-2611
City of Wichita Water Dept	268-4906
City of Wichita Traffic Engineering	269-4446

2. Underground utility service lines and overhead utility pole lines are to be adjusted as necessary by others prior to construction unless the plans specifically call for their adjustment by the Contractor or unless the plans specifically identify a utility to be adjusted by its owner during construction. Existing utilities and their location, as shown on the plans, represent the best information obtainable for design. The Contractor will be required to work around existing utilities within the right-of-way which do not conflict with proposed construction.

3. Trees and shrubs in public right-of-way which are in direct conflict with proposed new construction shall be removed by the Contractor with the Engineer's approval. Trees and shrubs which are not in direct conflict with proposed new construction shall be saved and protected from damage.

4. The Contractor shall give all property owners and/or tenants of developed property abutting the construction of this project a minimum of ten (10) days advance notice prior to start of construction.

5. The Contractor shall be responsible for preserving property irons. The Contractor will be required to re-establish any property irons which are damaged or destroyed by his construction operations. Such irons shall be re-established by a licensed land surveyor in accordance with state laws.

6. Contractor shall grade the sanitary sewer alignment to the profile and elevations shown on the easement grading plans. All costs for grading shall be paid as lump sum for easement grading.

7. All areas disturbed by construction operations shall by seeded with rye grass at a rate of 300 lbs/acre immediately following construction in that area. Prior to seeding, area shall be prepared per City specs.

8. The Contractor shall be responsible for maintaining continuous flow of sewage through construction. Contractor's proposed method for maintaining sewage flow shall be approved by the Engineer. Cost of maintaining flow of sewage through construction will not be paid for directly and this cost shall be considered as subsidiary to the other pay items of work.

Sheet Index

Title Sheet	1
Line 1	2
Easement Grading Plan	3
Standard Manhole Detail	4
Ring & Cover Detail	5
4" Vertical Riser Detail	6
Copy of Plat	7

PROFESSIONAL ENGINEER 13744 KANSAS 06/29/98

BAUGHMAN COMPANY P. A.
ENGINEERING, SURVEYING, & PLANNING
316-262-7271 • 315 ELLIS • WICHITA, KANSAS 67211

MINIMUM BUILDING PAD ELEVATIONS FOR LOWEST OPENINGS TO THE STRUCTURES			
LOT	BLOCK	ELEVATION	
		CITY DATUM	M.S.L.
1-8	D	142.0	1329.4
22-24	F	142.0	1329.4
31-34	F	142.0	1329.4
37-41	F	142.0	1329.4
1-8	A	142.0	1329.4

SCALE: 1" = 60'
• = Iron

BENCHMARK:

R.R. Spike in East Side of P.P. Located 112.5' North of the North R/W of Dora and 41.5' East of the ℄ of 119th St. W. Elev. = 145.26 (City Datum)

V-Notch Cut in Curb at the Northwest Corner of Lot 1, Block 5, Lark 3rd Addition. Elev. = 145.48 (City Datum)

= Easements To Be Graded

Approximate Easement Grading Quantities:
(For Information Only)
Excavation: 109 C.Y.
Fill: 707 C.Y.

The contractor shall grade the easements as shown to the elevations given on the easement grading plan. All costs for grading shall be incidental to the Easement Grading Bid Item.

The contractor shall 'straight' grade the easements between the elevations given. Where a callout designates 'Match', the contractor will grade to the existing ground elevation.

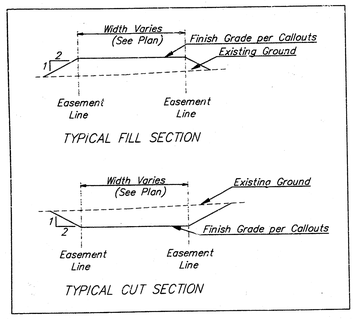

SECTION A-A

LARK 6TH ADDITION - PHASE II

EASEMENT GRADING

LAT. 18, MAIN 13, S.W.I.

BAUGHMAN COMPANY P.A.
ENGINEERING, SURVEYING, & PLANNING
316-262-7271 • 315 ELLIS • WICHITA, KANSAS 67211

PROJECT NUMBER	SHEET
468-82794	3 OF 7

DESIGN	DRAWN	APPROVED	DATE	SCALE
BLP	JAK	DMV	2-13-98	NOTED

LARK6\PH2\SSESGRD

SEWER APPURTENANCES DETAILS

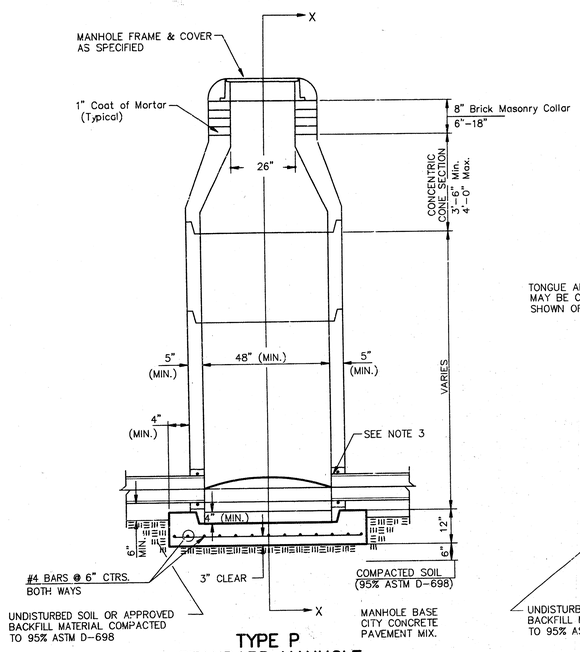

TYPE P
STANDARD MANHOLE

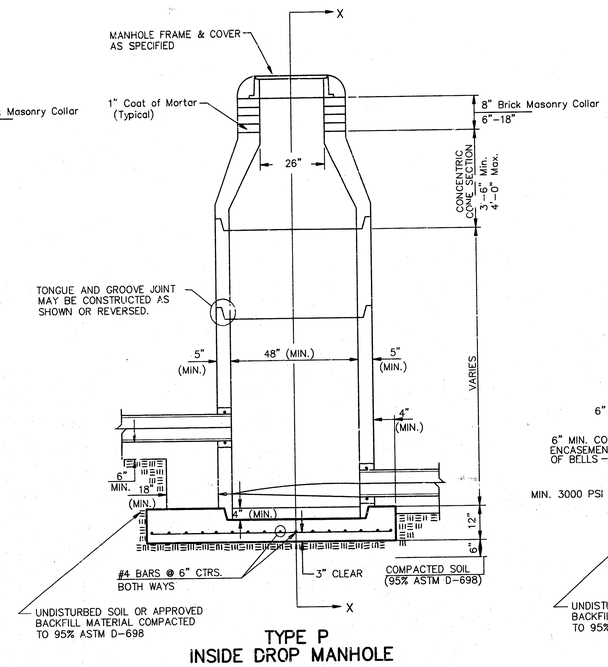

TYPE P
INSIDE DROP MANHOLE

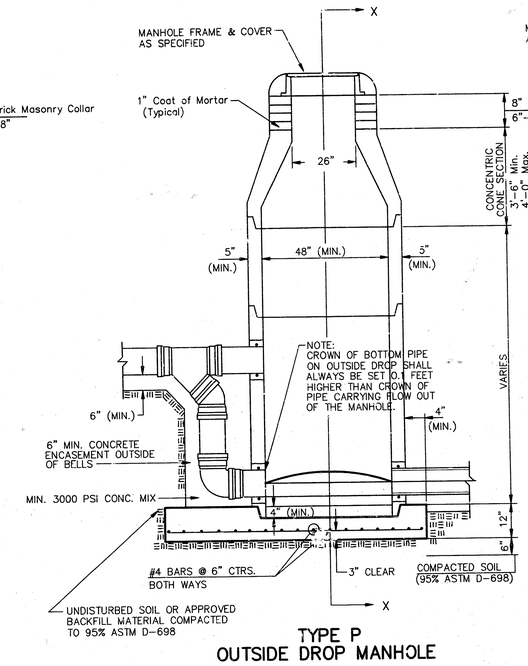

TYPE P
OUTSIDE DROP MANHOLE

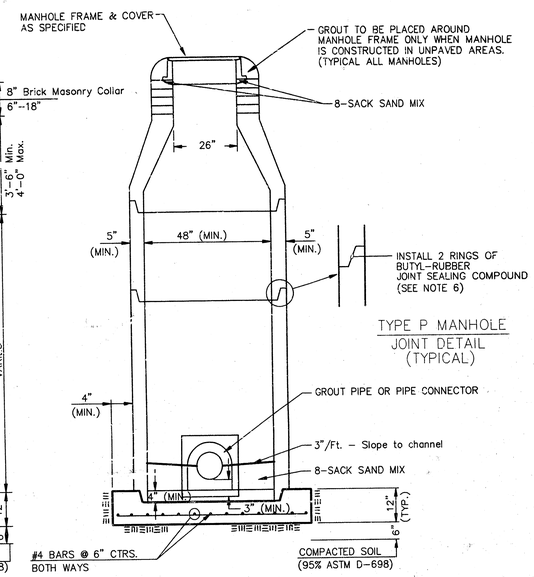

SECTION X
(TYPICAL)

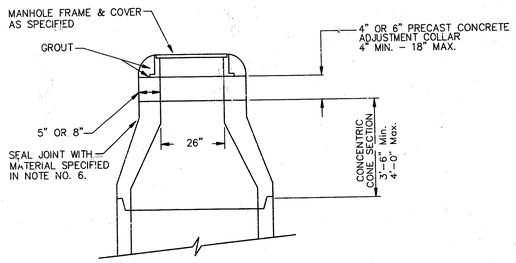

ALTERNATE CONSTRUCTION
IN UNPAVED AREAS

GENERAL NOTES

PRECAST MANHOLE NOTES

1. ALL PRECAST CONCRETE MANHOLE SECTIONS SHALL CONFORM TO THE LATEST REVISIONS OF A.S.T.M. C478 AS MODIFIED BY THE SPECIFICATIONS.
2. NON-SHRINK GROUT SHALL BE NON-METALLIC TYPE.
3. APPROVED FLEXIBLE WATERSTOP GASKETS SHALL BE INSTALLED TO JOIN THE SEWER TO THE MANHOLE WALL WHEN A.B.S. COMPOSITE PIPE OR P.V.C. PIPE IS USED. FOR OTHER TYPES OF PIPE THE SEWER SHALL BE GROUTED IN PLACE WITH NON-SHRINK GROUT. THE SEWER PIPE SHALL BE SUPPORTED WITH CONCRETE ENCASEMENT A MINIMUM OF 3 FEET FROM THE MANHOLE WALL AND TO THE FIRST JOINT FOR V.C.P. SUCH THAT THE JOINT REMAINS FLEXIBLE.
4. ALL INSIDE SURFACES OF THE CONCRETE MANHOLE WHICH WOULD BE EXPOSED TO SEWER GAS SHALL BE COATED WITH 2 COATS TNEMEC SERIES 66 HI-BUILD EPOXOLINE, DRY THICKNESS OF 8 MILS (MIN.)
5. EXTERIOR MANHOLE WALLS SHALL BE COATED WITH 1 COAT MOBILARMA 633 BITUMINOUS COATING.
6. JOINT SEALING COMPOUND SHALL BE KENT SEAL NO. 2 OR APPROVED EQUAL.
7. PRECAST MANHOLES SHALL BE SET AT LEAST 4 INCHES INTO THE MANHOLE BASE.
8. TOP OF MANHOLE FLOOR SLAB SHALL BE AT LEAST 3 INCHES BELOW THE FLOW LINE OF THE OUTLET PIPE TO INSURE SUFFICIENT MINIMUM THICKNESS OF SHAPED INVERT.
9. LIFTING HOLES SHALL BE FILLED WITH NON-SHRINK GROUT AND THE INTERIOR SURFACE COATED AS SPECIFIED.
10. MORTAR USED IN MASONRY CONSTRUCTION SHALL CONTAIN 8 SACKS OF CEMENT PER CUBIC YARD. CONCRETE USED IN MANHOLE BASES SHALL CONFORM TO THE REQUIREMENTS OF CONCRETE FOR CONCRETE PAVEMENT CONSTRUCTION AS SPECIFIED IN THE CITY STANDARD PAVING SPECIFICATIONS USING CITY CONCRETE PAVEMENT MIX WITHOUT AIR ENTRAINING ADMIXTURE. MORTAR SHALL BE PLACED AROUND THE MANHOLE RING AS SHOWN ON THE DRAWINGS WHEN MANHOLES ARE CONSTRUCTED IN UNPAVED AREAS. MANHOLES CONSTRUCTED WHERE PIPE SIZES ARE SMALLER THAN 24" SHALL HAVE AN INSIDE DIAMETER OF 4'. MANHOLES CONSTRUCTED WHERE PIPE SIZES ARE 24" OR LARGER SHALL HAVE AN INSIDE DIAMETER OF 5'. COMPLETED MANHOLE SHALL BE WITHOUT LEAKS AND WATER TIGHT.
11. REINFORCING STEEL SHALL BE INSTALLED IN THE MANHOLE BASES AND SHALL CONSIST OF NO. 4 BARS PLACED ON 6" CENTERS IN BOTH DIRECTIONS. THE MANHOLE BASE REINFORCEMENT SHALL BE PLACED AT LEAST 3" ABOVE THE BOTTOM OF THE MANHOLE BASE. ALL COSTS FOR FURNISHING AND INSTALLING REINFORCING STEEL SHALL BE INCLUDED IN THE UNIT PRICE BID FOR THE MANHOLE.
12. OPENINGS SHALL BE CUT INTO THE MANHOLE WALL WHEN OUTSIDE DROPS ARE CONSTRUCTED ON EXISTING MANHOLES. SUCH OPENINGS CUT INTO EXISTING MANHOLES SHALL BE AS SMALL AS PRACTICAL TO FACILITATE INSTALLING AND GROUTING THE NEW PIPE IN PLACE. WATERSTOP GASKETS SHALL BE USED WITH P.V.C. AND A.B.S. COMPOSITE PIPE. THE NEW PIPE SHALL BE GROUTED INTO THE OPENING USING AN APPROVED NONSHRINK GROUT FOR THE FULL MANHOLE WALL THICKNESS. THE EXTERIOR OF THE COMPLETED CONNECTION SHALL BE SEALED WITH AN APPROVED BITUMINOUS COATING SUCH THAT THE CONNECTION WILL BE WATER TIGHT. FLOOR OF MANHOLE SHALL BE MODIFIED TO FORM NEW FLOW CHANNEL FOR THE NEW CONNECTION. AS INDICATED BY THE DRAWING. THIS WORK, INCLUDING MODIFICATION OF MANHOLE FLOOR, SHALL BE PAID FOR AT THE UNIT PRICE BID FOR OUTSIDE DROP STACK CONSTRUCTED ON EXISTING MANHOLE.
13. THE FLOORS OF ALL MANHOLES SHALL BE SHAPED WITH FLOW CHANNELS SUCH THAT THE MANHOLES WILL BE SELF CLEANING AND FREE OF AREAS WHERE SOLIDS COULD BE DEPOSITED AS SEWAGE FLOWS THROUGH THE MANHOLE FROM ALL INLET PIPES TO THE OUTLET PIPE. FLOW CHANNELS SHALL BE FORMED TO MATCH THE BOTTOM HALVES OF THE INFLOWING PIPES AND THE OUTFLOWING PIPE AS SHOWN BY THE DRAWINGS EXCEPT FOR INSIDE DROP MANHOLES. FLOW CHANNELS FOR INSIDE DROP MANHOLES SHALL BE CONSTRUCTED AS INDICATED BY THE DRAWING. MANHOLE FLOORS SHALL HAVE SLOPES OF 3 INCHES PER FOOT IN THE AREAS OUTSIDE OF THE FLOW CHANNELS SLOPED TOWARD THE FLOW CHANNELS. PIPES LAID THROUGH MANHOLES SHALL HAVE THE TOP HALF REMOVED TO NEAT LINES FOR THE FULL INSIDE DIAMETER OF THE MANHOLE. MANHOLE FLOORS SHALL THEN BE SHAPED AROUND THE BOTTOM HALF OF THE PIPE WHICH FORMS THE FLOW CHANNEL.
14. PIPES INSTALLED WITHIN THE EXCAVATION MADE FOR THE MANHOLE SHALL BE CRADLED WITH CONCRETE TO THE LIMITS OF THE MANHOLE EXCAVATION. WHEN CLAY PIPE IS USED, THE CRADLE SHALL EXTEND TO THE FIRST JOINT OUTSIDE THE MANHOLE. THE CRADLE SHALL BE TERMINATED AT THE CLAY PIPE JOINT IN A MANNER WHICH WILL MAINTAIN THE FLEXIBILITY OF THE JOINT. COST OF CRADLE WITHIN MANHOLE EXCAVATION OR TO CLAY PIPE JOINTS ADJACENT TO MANHOLE SHALL BE INCLUDED IN THE UNIT PRICE BID FOR THE MANHOLE.
15. MANHOLE COVER CASTINGS AND MANHOLE FRAME CASTINGS SHALL CONFORM TO THE REQUIREMENTS AS INDICATED IN THE STANDARD SPECIFICATIONS AND AS SHOWN IN THE STANDARD DETAIL DRAWING.
16. THE VERTICAL DROP IN INSIDE DROP MANHOLES SHALL NOT EXCEED 2' FOR INFLOWING PIPES SIZED 12" OR SMALLER AND 2' FOR INFLOWING PIPES LARGER THAN 12". THE CROWNS OF INFLOWING PIPES SHALL NEVER BE SET LOWER THAN THE CROWN OF THE OUTFLOWING PIPE.
17. STANDARD MANHOLES AND STANDARD INSIDE DROP MANHOLES SHALL BE BID AS STANDARD MANHOLES FOR THE TYPE AND DIAMETER INDICATED. OUTSIDE DROP MANHOLES SHALL BE BID AS STANDARD OUTSIDE DROP MANHOLES FOR THE TYPE AND DIAMETER INDICATED. ALL MANHOLE DIAMETERS WILL BE 4' UNLESS INDICATED OTHERWISE.
18. A BRICK MASONRY COLLAR SHALL BE INSTALLED BETWEEN THE CAST IRON FRAME AND THE CONCENTRIC CONE. THE COLLAR WILL HAVE 8" WALLS AND A VERTICAL HEIGHT OF 6" MINIMUM AND 18" MAXIMUM. A 1" COAT OF MORTAR WILL BE PLASTERED ON THE OUTSIDE OF THE COLLAR. THE USE OF PRE-CAST CONCRETE SPACERS FOR MANHOLE TOP ADJUSTMENT IS ALSO ALLOWED.

CITY OF WICHITA
STD. MANHOLE DETAILS
& SEWER APPURTENANCES DETAIL

BAUGHMAN COMPANY P.A.
ENGINEERING, SURVEYING, & PLANNING
316-262-7271 • 315 ELLIS • WICHITA, KANSAS 67211

PROJECT NUMBER				SHEET
468-82794				4 OF 7
DESIGN C.O.W.	DRAWN Staff	APPROVED	DATE	SCALE NONE

DETAILS1.DWG

MANHOLE FRAME AND COVER DETAIL

ADOPTED AS STANDARD DESIGN BY
CITY OF WICHITA, KANSAS

MANHOLE COVER

Weight = 180 Lbs.

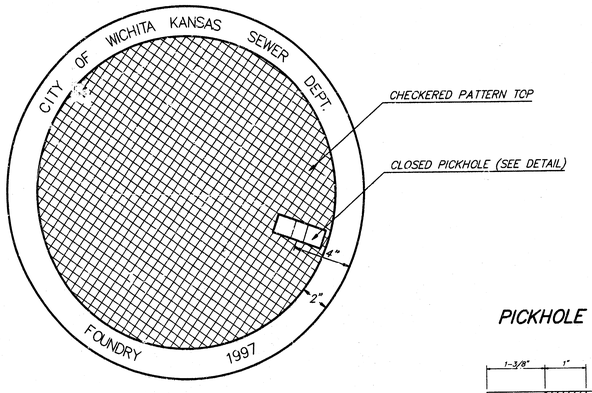

TOP VIEW

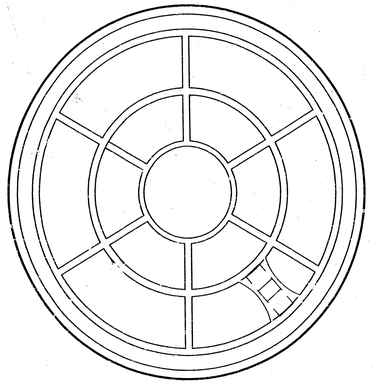

BOTTOM VIEW

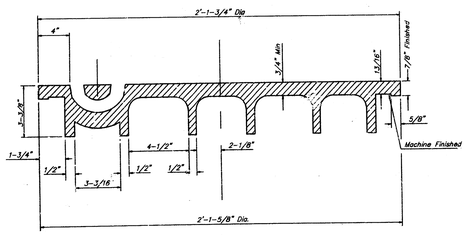

SECTION VIEW

PICKHOLE DETAIL

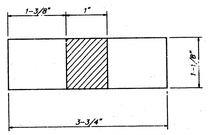

TOP VIEW

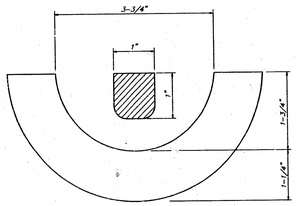

SECTION VIEW

MANHOLE FRAME

Weight = 240 Lbs.

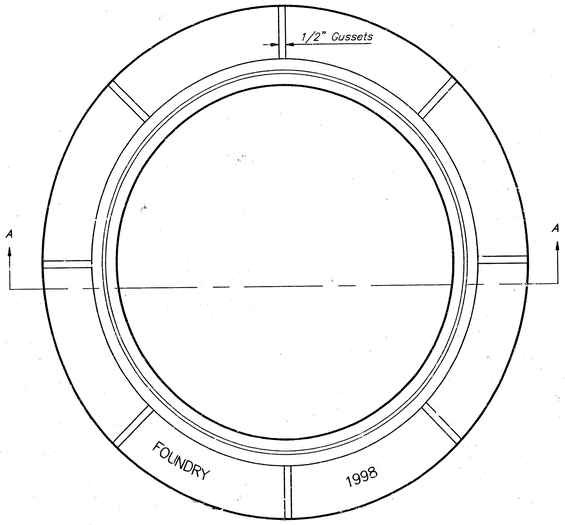

TOP VIEW

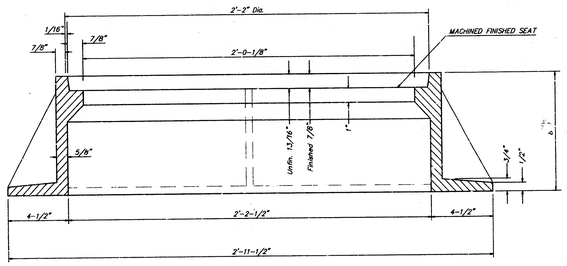

SECTION A–A

GENERAL NOTES

MANHOLE CASTINGS SHALL BE MANUFACTURED USING GOOD QUALITY GRAY IRON CONFORMING TO CLASS 30 OF A.S.T.M. DESIGNATION A–48. DIMENSIONS AND WEIGHTS SHOWN ON THE DETAILED DRAWINGS SHALL BE CONSIDERED AS MINIMUM REQUIREMENTS AND ANY DEVIATIONS FROM THE DIMENSIONS SHOWN MUST BE SPECIFICALLY APPROVED. THE FINISHED CASTINGS SHALL BE OF UNIFORM QUALITY, FREE FROM BLOWHOLES, POROSITY, HARD SPOTS, SHRINKAGE DISTORTIONS OR OTHER DEFECTS.

MANHOLE CASTINGS SHALL BE COATED WITH AN ASPHALT PAINT RESULTING IN A SMOOTH, TOUGH AND TENACIOUS COATING WHICH IS NOT BRITTLE OR TACKY.

MANHOLE CASTINGS SHALL BE MANUFACTURED SUCH THAT A COVER MANUFACTURED BY ANY ONE FOUNDARY WILL FIT INTERCHANGEABLY INTO A FRAME MANUFACTURED BY ANOTHER FOUNDRY AND STILL MEET ALLOWABLE CLEARANCES AND NON–ROCKING REQUIREMENTS. THIS WILL REQUIRE MANUFACTURING OF THE MATCHING FACES ON THE COVER AND THE FRAME TO CLOSE TOLERANCES.

THE OUTSIDE CIRCUMFERENCE OF THE VERTICAL FACE OF THE COVER AND THE INSIDE CIRCUMFERENCE OF THE VERTICAL FACE IN THE FRAME RECESS SHALL BE MANUFACTURED TO TOLERANCES SUCH THAT THE CLEARANCE BETWEEN THE COVER AND FRAME WILL NOT EXCEED 1/8" AT ANY POINT AROUND THE CIRCUMFERENCE OF THE COVER. THE SEATING SURFACES BETWEEN THE COVER AND FRAME SHALL BE MACHINED SUCH AS THESE SURFACES SHALL MAKE FULL CONTACT FOR THEIR FULL CIRCUMFERENCE TO PRECLUDE THE COVER FROM ROCKING IN THE FRAME.

THE MANHOLE FRAME AND COVER SHALL BE MARKED WITH LETTERING INDICATING THE NAME OF THE MANUFACTURER AND THE YEAR WHEN THE COVER OR FRAME WAS CAST. THE COVER SHALL BE FURTHER IDENTIFIED WITH REGARDS TO OWNERSHIP USING LETTERS AT LEAST 1 INCH IN HEIGHT. THIS IDENTIFICATION SHALL BE "CITY OF WICHITA SEWER DEPARTMENT". THE WORD DEPARTMENT MAY BE ABBREVIATED. THE TEXTURE OF THE TOP SURFACE OF THE COVER SHALL BE MANUFACTURED IN A CHECKERED PATTERN DESIGN AS INDICATED ON THE DRAWINGS. SMOOTH BLOCKOUTS SHALL BE UTILIZED TO HIGHLIGHT THE LETTERING ON THE COVER SURFACE. THE TOTAL AREA OF SMOOTH SURFACE BLOCKOUT SHALL NOT EXCEED THE AREA AS INDICATED ON THE DRAWING. POSITIONING OF SMOOTH BLOCKOUTS AND LETTERING MAY VARY FROM THAT SHOWN ON THE DETAILED DRAWING.

MANHOLE FRAME AND COVER DETAIL

ADOPTED AS STANDARD DESIGN BY
CITY OF WICHITA, KANSAS

BAUGHMAN COMPANY P. A.
ENGINEERING, SURVEYING, & PLANNING
316-262-7271 • 315 ELLIS • WICHITA, KANSAS 67211

PROJECT NUMBER	SHEET
468-82794	5 OF 7

DESIGN	DRAWN	APPROVED	DATE	SCALE
	Staff			None

DETAILS\MANHOLE

VERTICAL RISER DETAILS
ADOPTED AS STANDARD DESIGN
BY
CITY OF WICHITA, KANSAS
OCTOBER 1992

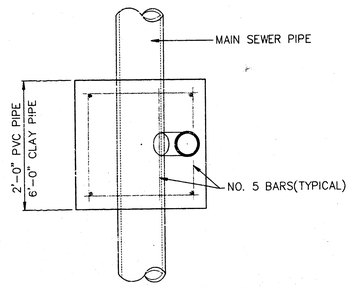

TYPICAL PLAN VIEW

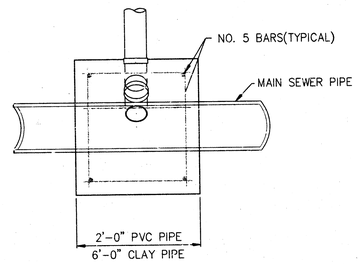

TYPICAL SECTION X–X

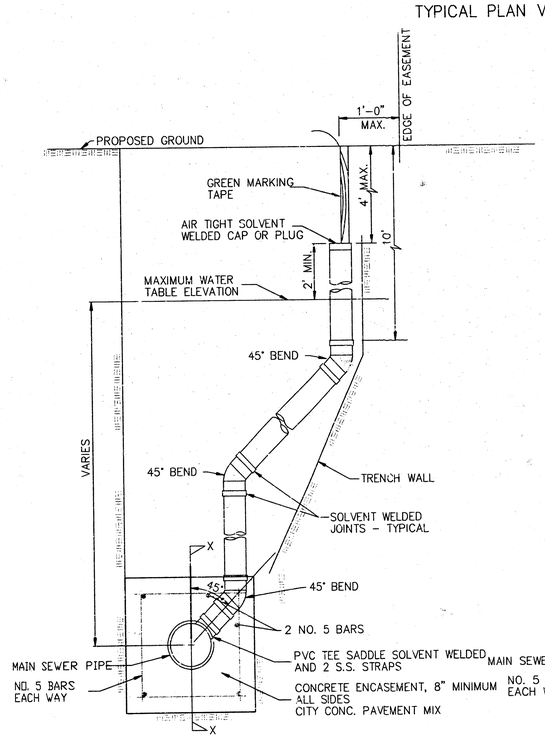

METHOD "A"

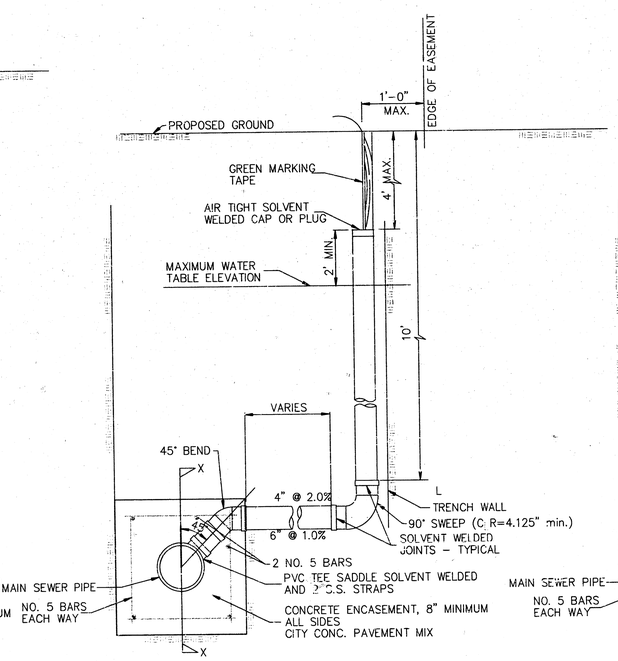

METHOD "B"

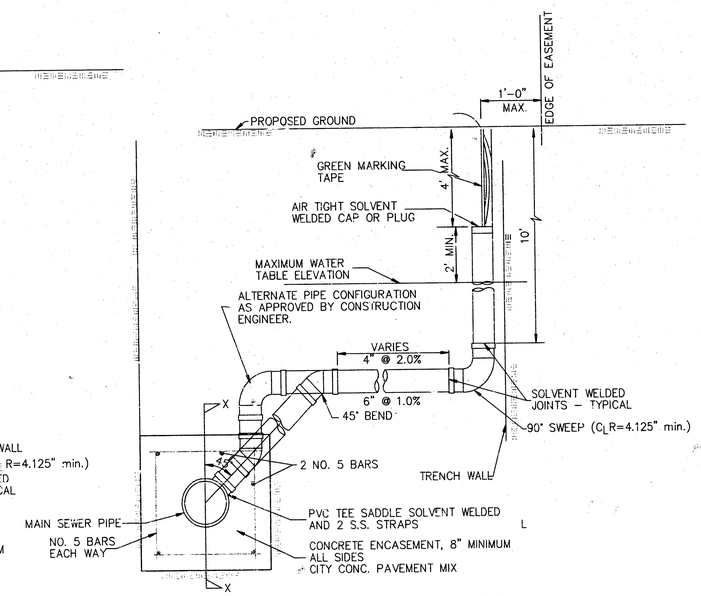

METHOD "C"

NOTE: RISER PIPE REQUIREMENTS AT MANHOLE STUBS SHALL BE SIMILAR TO THOSE SHOWN ABOVE.

GENERAL NOTES

1. RISERS. Risers shall be installed to serve all lots or tracts where the sanitary sewer main is below the water table. Risers shall also be installed to serve all lots and tracts where the sanitary sewer main depth is greater than 12 feet below the proposed ground elevation. Installation of risers because of field conditions shall be as approved by the Construction Engineer. The location of the risers to serve developed property shall be approved by the property owner and the Construction Engineer.

2. PIPE STUBS. Pipe stubs shall be installed in manholes where locations of manholes will provide satisfactory service connection as determined by the Construction Engineer. The vertical distance between the flowline of the manhole pipe stub and the flowline of the sanitary sewer main out of the manhole shall not exceed 2 feet. Risers shall be utilized at manhole pipe stubs as indicated in Note 1. Manhole pipe stubs shall be set such that the top of the stub is not lower than the top of the sanitary sewer main.

3. SIZING. Pipe stubs and risers shall be sized according to the plans and riser table where risers are indicated by the plans. Where risers or pipe stubs are required because of field conditions, the risers and stubs shall be six-inch diameter for commercial or industrial properties and 4" or 6" diameter for residential properties, based on lot size and sanitary sewer main depth. Sizing of risers and stubs shall be approved by the Construction Engineer prior to installation.

4. RISER OR STUB MATERIAL. Risers and stubs shall be constructed of SDR 35 PVC Pipe or Schedule 40 PVC Pipe, meeting the requirements of the latest revision of A.S.T.M. . All pipe joints shall be solvent welded.

5. REINFORCED CONCRETE ENCASEMENT. Riser connections to clay pipe sanitary sewers shall be reinforced concrete encased both ways from the riser centerline. The reinforced concrete encasement shall extend three feet from the riser centerline or stop at the first sanitary sewer pipe joint within three feet of the riser centerline. Riser connections to PVC Sanitary Sewer mains shall be reinforced concrete encased one foot each way from the riser centerline. The concrete encasement shall be reinforced using reinforcing steel as shown in the appropriate drawing. The concrete shall conform to the City Standard Specifications for concrete pavement.

6. BEDDING. Bedding around the sanitary sewer riser shall be compacted Pipe Bedding Type 1 or 2. The bedding shall be placed and compacted from the depth of the sanitary sewer main to the top of the sanitary sewer riser pipe. Compacted Pipe Bedding Type 1 or 2 shall be required for all risers whether constructed in vertical wall or sloped wall trenches. Bedding material and construction practices shall be approved by the Construction Engineer prior to installation.

7. SUPPORT OF RISERS. Sanitary sewer riser pipe shall be supported during trench backfill. The riser pipe shall be held in a vertical position at all times until trench backfill and compaction has been completed. Contractor's methods for supporting and backfilling the riser pipe shall be approved by the Construction Engineer.

8. PLUGGING. The ends of the riser pipes and manhole stubs shall be plugged using an airtight solvent welded cap or plug. Cap or plug fittings shall be approved by the Construction Engineer prior to installation. Caps or plugs which do not provide an airtight seal will not be accepted.

9. TOP OF THE RISER PIPE. The top elevation of the sanitary sewer riser pipe shall be built per plan elevations, unless otherwise directed by the Construction Engineer. Where riser elevations are not shown on the plans, the top of the risers shall be set at an elevation four feet below the proposed ground surface. If ground water is encountered, the top of the riser pipe shall be set at an elevation two feet (min.) above the maximum water table elevation, regardless of the riser elevation shown on the plans.

10. MARKING. Locations of the ends of the sanitary sewer riser pipe shall be marked by fastening green colored plastic tape to the end of the riser. The tape shall be supported by a length of wooden 2 x 4, extending from the top of the riser pipe to the proposed ground surface. The green tape shall be visible and extend one foot above the proposed ground surface. The green tape shall be 4 mil Polyethylene film with a minimum width of three inches, specifically manufactured for the purpose of identification of underground sewers.

11. LOCATION MEASURES. The project inspector shall record and document the location of all risers constructed as measured from the nearest manhole, indicating the direction from the manhole, the direction and distance from the main, riser size, and elevation of the top of the riser.

12. RISER LOCATION. The riser shall be located per plan if shown. If not shown on the plan, the riser shall be located at the center of the lot, within one foot of the property side of the easement for the lot being served. All riser locations shall be approved by the Construction Engineer prior to installation.

13. PAYMENT. "Sanitary sewer risers" shall be paid for at the contract unit price per each, which price shall be full compensation for all pipe, fittings, marking tape, length of wooden 2 x 4, reinforced concrete encasement, support during backfill, backfill, labor, site restoration, and any other items necessary to complete the work.

"Manhole stubs" shall be paid for at the contract unit price per each, which shall be full compensation for all labor, material, and incidentals necessary to complete the work including all pipe, fittings, reinforced concrete encasement, and all other items as required and listed for "Sanitary Sewer Risers".

City of Wichita Standard
Riser Details

BAUGHMAN COMPANY P. A.
ENGINEERING, SURVEYING, & PLANNING
316-262-7271 • 315 ELLIS • WICHITA, KANSAS 67211

PROJECT NUMBER	SHEET
488-92794	6 OF 7

DESIGN	DRAWN	APPROVED	DATE	SCALE

LARK 6TH ADDITION
WICHITA, SEDGWICK COUNTY, KANSAS

State of Kansas)
Sedgwick County) SS We, Baughman Company, P.A., Surveyors in aforesaid County and State do hereby certify that we have surveyed and platted "LARK 6TH ADDITION", Wichita, Sedgwick County, Kansas and that the accompanying plat is a true and correct exhibit of the property surveyed, described as and being a replat of Lots 1, 2, 3, 4, 5, 6, 7, 8, and 9, Block C, Lark Addition, Wichita, Sedgwick County, Kansas, together with all of Dora Ct. lying within said Block C, together with all of Reserve "C" as platted in said Lark Addition, together with a replat of a part of Reserve "A", Lark 4th Addition, Wichita, Sedgwick County, Kansas, and together with a tract of land in the in the NW1/4 of Sec. 31, Twp. 27-S, R-1-W of the 6th P.M., Sedgwick County, Kansas, described as follows: Beginning at the southeasterly most corner of Reserve "C" in said Lark Addition; thence N01°20'46"E along the east line of said Reserve "C" and along the east line of Block C in said Lark Addition, 410.17 feet to the NE Corner of said Block C, said NE Corner also being on the south right-of-way line of Dora as platted in said Lark Addition; thence N89°43'07"E along the south right-of-way line of said Dora, 10 feet to the P.C. of a curve to the left; thence northeasterly along said curve, having a central angle 36°44'04" and a radius of 500 feet, an arc distance of 320.57 feet, (having a chord length of 315.11 feet bearing N71°21'05"E), to the P.R.C. of a curve to the right in said south right-of-way line; thence northeasterly, easterly, and southeasterly along said curve, having a central angle of 66°41'39" and a radius of 450 feet, an arc distance of 523.81 feet, (having a chord length of 494.74 feet bearing N86°19'52"E) to the P.R.C. of a curve to the left in said south right-of-way line; thence southeasterly along said curve, having a central angle of 16°00'04" and a radius of 500 feet, an arc distance of 139.64 feet, (having a chord length of 139.18 feet bearing S58°19'20"E); thence N01°20'46"E, 67.81 feet to a point on the north right-of-way line of said Dora, said point also being the southwesterly most corner of Reserve "A", Lark 4th Addition, Wichita, Sedgwick County, Kansas; thence southeasterly along the south line of said Reserve "A", said south line being a curve to the left, having a central angle of 05°15'29" and a radius of 434 feet, an arc distance of 39.83 feet, (having a chord length of 39.82 feet bearing S77°02'23"E) to a deflection point in said Reserve "A"; thence N01°20'46"E along a line of said Reserve "A", 124.64 feet to a deflection point in said Reserve "A"; thence N89°43'07"E along a line of said Reserve "A", 586.16 feet to a point 1.00 foot west of a deflection point in said Reserve "A"; thence N00°23'48"W parallel with and 1.00 foot normally distant west of a line of said Reserve "A", 35.56 feet to a point on a line of said Reserve "A"; said point being 1.00 foot west of a deflection point in said Reserve "A"; thence S89°43'07"W along a line of said Reserve "A", 166.83 feet to a deflection point in said Reserve "A"; thence N44°28'04"W along a line of said Reserve "A", 135.39 feet to a deflection point in said Reserve "A"; thence N01°20'46"E along a line of said Reserve "A", 155.79 feet to a deflection point in said Reserve "A"; thence N46°20'46"E along a line of said Reserve "A", 108.50 feet to a deflection point in said Reserve "A"; thence N01°20'46"E along a line of said Reserve "A", 244.58 feet to a deflection point in said Reserve "A"; thence N46°20'46"E along a line of said Reserve "A", 93.21 feet to a deflection point in said Reserve "A"; thence N76°52'50"E along a line of said Reserve "A", 92.01 feet to a deflection point in said Reserve "A"; thence N05°00'00"W along a line of said Reserve "A", 303.04 feet to the NE Corner of said Reserve "A", said NE Corner being on the southeasterly right-of-way line of the Atchison, Topeka, and Santa Fe Railroad; thence N76°52'50"E along said southeasterly right-of-way line, 607.64 feet to a deflection point in said southeasterly right-of-way line; thence N76°55'47"E along said southeasterly right-of-way line, 249.86 feet to the NW Corner of Lot 8, Block 1, Lark 3rd Addition, Wichita, Sedgwick County, Kansas; thence S00°23'48"E along the west line of said Lark 3rd Addition, 1263.88 feet to the NE Corner of Lot 31, Block 5, in said Lark 3rd Addition; thence N86°53'08"W along the west line of said Lark 3rd Addition, 304.57 feet to the NW Corner of Lot 34 in said Block 5; thence S00°23'48"E along the west line of said Lot 34, 113.67 feet to the SW Corner of said Lot 34; thence S05°56'58"E, 65.26 feet to the NW Corner of Lot 19, Block 4, in said Lark 3rd Addition; thence S00°16'53"E along the west line of said Lot 19 and as extended south, 120.43 feet to the rear corner common to Lots 18 and 17 in said Block 4; thence S89°43'07"W along the north line of said Lot 17 and as extended west, 65.08 feet to a deflection point in the rear line of Lot 16 in said Block 4; thence S53°38'19"W along the rear line of said Lot 16 and as extended southwesterly, 168.23 feet to a deflection point in the rear line of Lot 15 in said Block 4; thence S01°20'46"W along the rear line of said Lot 15 and as extended south, 210 feet to the SW Corner of Lot 14 in said Block 4, said SW Corner being on the south line of the NW1/4 of said Sec. 31; thence S89°43'07"W along the south line of said NW1/4, 1869.84 feet to the point of beginning.

Existing public easements and dedications being vacated by virtue of K.S.A. 12-512(b).

Baughman Company, P.A.

Michael G. Conrey
Michael G. Conrey, Surveyor

MICHAEL G. CONREY REGISTERED LS-971 KANSAS LAND SURVEYOR

Know all men by these presents that we, the undersigned, have caused the land in the surveyors certificate to be platted into Lots, Blocks, Streets, and Reserves to be known as "LARK 6TH ADDITION", Wichita, Sedgwick County, Kansas. The utility easements are hereby granted as indicated for the construction and maintenance of all public utilities. The drainage and utility easements are hereby granted as indicated for drainage purposes and for the construction and maintenance of all public utilities. The drainage easements are hereby granted as indicated for drainage purposes. The streets are hereby dedicated to and for the use of the public. Reserve "A" is hereby reserved for drainage purposes, lakes, landscaping, sidewalks, gazebos, open space, and utilities as confined to easements. Reserves "B" and "C" are hereby reserved for landscaping, open space, walls, entry monuments, and utilities as confined to easements. Reserves "D" and "E" are hereby reserved for open space and utilities as confined to easements. Reserves "A", "B", "C", "D", and "E" shall be owned and maintained by the Homeowners Association for the addition. All abutters rights of access to or from 119th Street West over and across the west line of Reserve "A" are hereby granted to the City of Wichita, Kansas. The Minimum Building Pad Elevations for the lowest opening to the structures shall be as shown on the face of the plat.

KicK'N Development Corporation

Paul E. Kelsey, President
Paul E. Kelsey

State of Kansas)
Sedgwick County) SS The foregoing instrument acknowledged before me, this 12th day of November, 1997, by Paul E. Kelsey, President of KicK'N Development Corporation, on behalf of the corporation.

Karen Wolf, Notary Public
KAREN WOLF
My App't. Exp. 7/29/99

KAREN WOLF NOTARY PUBLIC STATE OF KANSAS My Appt. Exp. 7/29/99

MINIMUM BUILDING PAD ELEVATIONS FOR LOWEST OPENINGS TO THE STRUCTURES			
LOT	BLOCK	ELEVATION CITY DATUM	ELEVATION M.S.L.
1-8	D	142.0	1329.4
22-24	F	142.0	1329.4
31-34	F	142.0	1329.4
37-41	F	142.0	1329.4
1-8	A	142.0	1329.4

BENCHMARK:
CITY OF WICHITA BENCH MARK DISC, N. END OF W. HEADWALL OF R.C.B.C., LARK & MAY
ELEV. = 139.20 (CITY DATUM)

X = CROSS (SET)
● = 1/2" REBAR W/ "BAUGHMAN" CAP (SET)
■ = 1/2" REBAR W/ "BAUGHMAN" CAP (FOUND)
Ø = 1/2" IRON IN THIMBLE (FOUND)
⊗ = #5 REBAR IN THIMBLE (FOUND)
○ = 1/2" IRON (FOUND)
◉ = #5 REBAR W/ "G&A" CAP (FOUND)

(M) = MEASURED
(D) = DESCRIBED
(C-P) = CALCULATED PER PLATTED INFO.

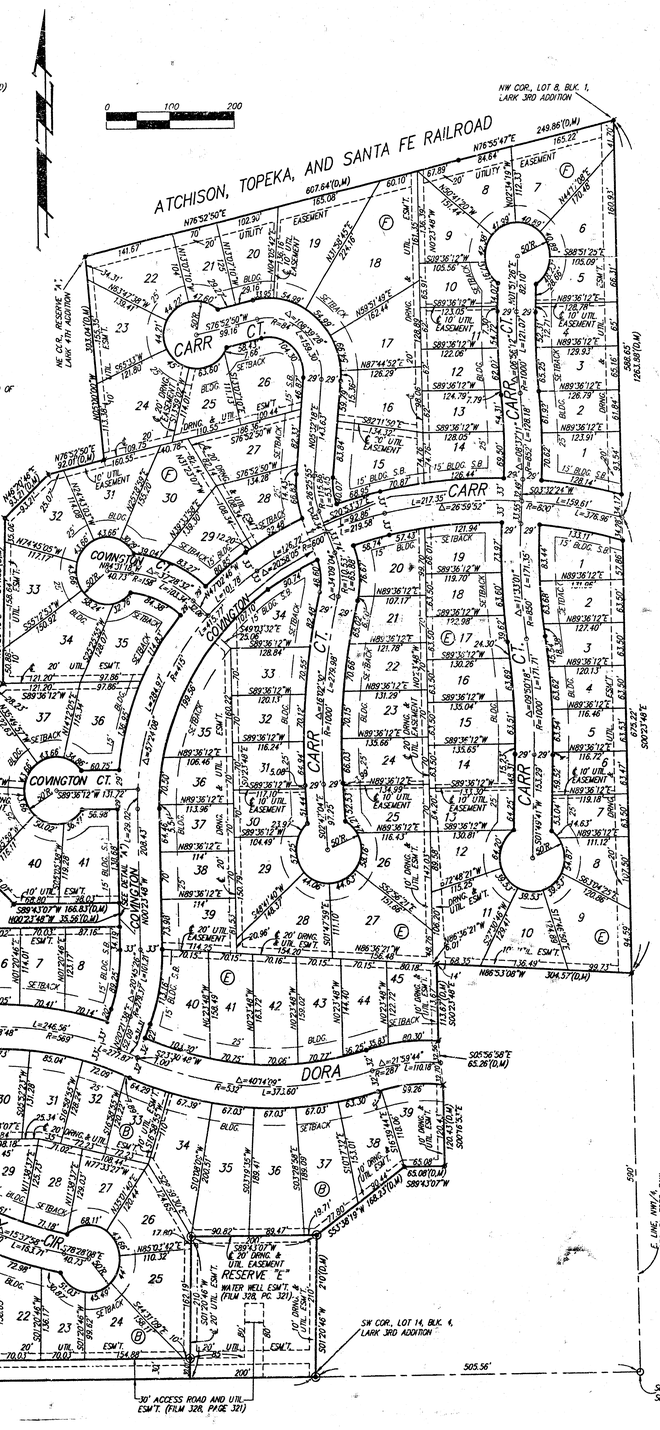

We, the undersigned, holders of a mortgage on the above described property, do hereby consent to this plat of "LARK 6TH ADDITION", Wichita, Sedgwick County, Kansas.

State Bank of Colwich

Frank A. Gullentrop President
(Title)

State of Kansas)
Sedgwick County) SS The foregoing instrument acknowledged before me, this 12th day of November, 1997, by Frank A. Gullentrop President of the State Bank of Colwich, on behalf of the bank.
(Title)

KAREN WOLF, Notary Public
My App't. Exp. 7/29/99

KAREN WOLF NOTARY PUBLIC STATE OF KANSAS My Appt. Exp. 7/29/99

This plat of "LARK 6TH ADDITION", Wichita, Sedgwick County, Kansas has been submitted to and approved by the Wichita-Sedgwick County Metropolitan Area Planning Commission, Wichita, Kansas.
Dated this 12th day of June, 1997.
Wichita-Sedgwick County Metropolitan Area Planning Commission

WICHITA-SEDGWICK COUNTY METROPOLITAN AREA PLANNING COMM. SEAL KANSAS

John C. Frye, Chairman
Marvin S. Krout, Secretary

This plat approved and all dedications shown hereon accepted by the City Council of the City of Wichita, Kansas, this 9th day of December, 1997.

THE CITY OF WICHITA SEDGWICK COUNTY, KANSAS

Bob Knight, Mayor
Pat Burnett, City Clerk

Entered on transfer record this _____ day of _____, 199__.

_____, County Clerk
James Alford

State of Kansas)
Sedgwick County) SS This is to certify that this plat has been filed for record in the office of the Register of Deeds, this _____ day of _____, 199__, at _____ o'clock __ M; and is duly recorded.

_____, Register of Deeds
Larry Consolver

_____, Deputy
Michael D. Hurtt

7/7

BAUGHMAN COMPANY P.A.
ENGINEERING, SURVEYING, & PLANNING
316-262-7271 • 315 ELIS • WICHITA, KANSAS 67211
F:\PLAT\LARK6F.DWG-MGC

LARK 6TH ADDITION