82592

CONSTRUCTION PLANS FOR

LATERAL 70, MAIN 5
SANITARY SEWER NO. 23

IN

THE CITY OF WICHITA,

SEDGWICK COUNTY, KANSAS

MICHAEL E. LINDEBAK, P.E. - CITY ENGINEER

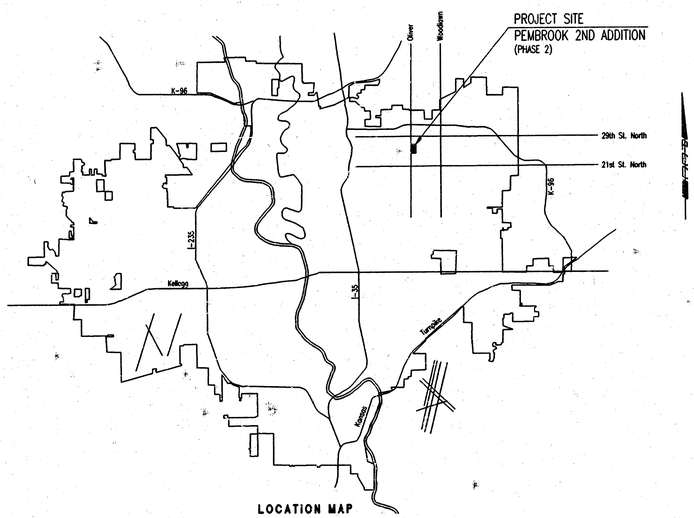

LOCATION MAP

INDEX OF SHEETS

SHEET NO. 1	TITLE SHEET
SHEET NO. 2	KEY MAP AND GENERAL NOTES
SHEET NO. 3	EASEMENT GRADING PLAN
SHEET NO. 4-5	PLATS
SHEET NO. 6	PLAN/PROFILE
SHEET NO. 7	TYPE "P" MANHOLE DETAILS
SHEET NO. 8	FRAME & COVER DETAIL
SHEET NO. 9	RISER DETAILS

Booked
6/2/99
P.75
AS BUILT
ROL

INDEX CODE 743724

CITY OF WICHITA PROJECT NO. 468-76-245-82592-000-000-001

OCTOBER 1998

PLANS PREPARED BY

PROFESSIONAL ENGINEERING CONSULTANTS, P.A.

ENGINEERS

WICHITA, KANSAS

MICHAEL D. KELSEY
13944
10/14/98
KANSAS
PROFESSIONAL ENGINEER

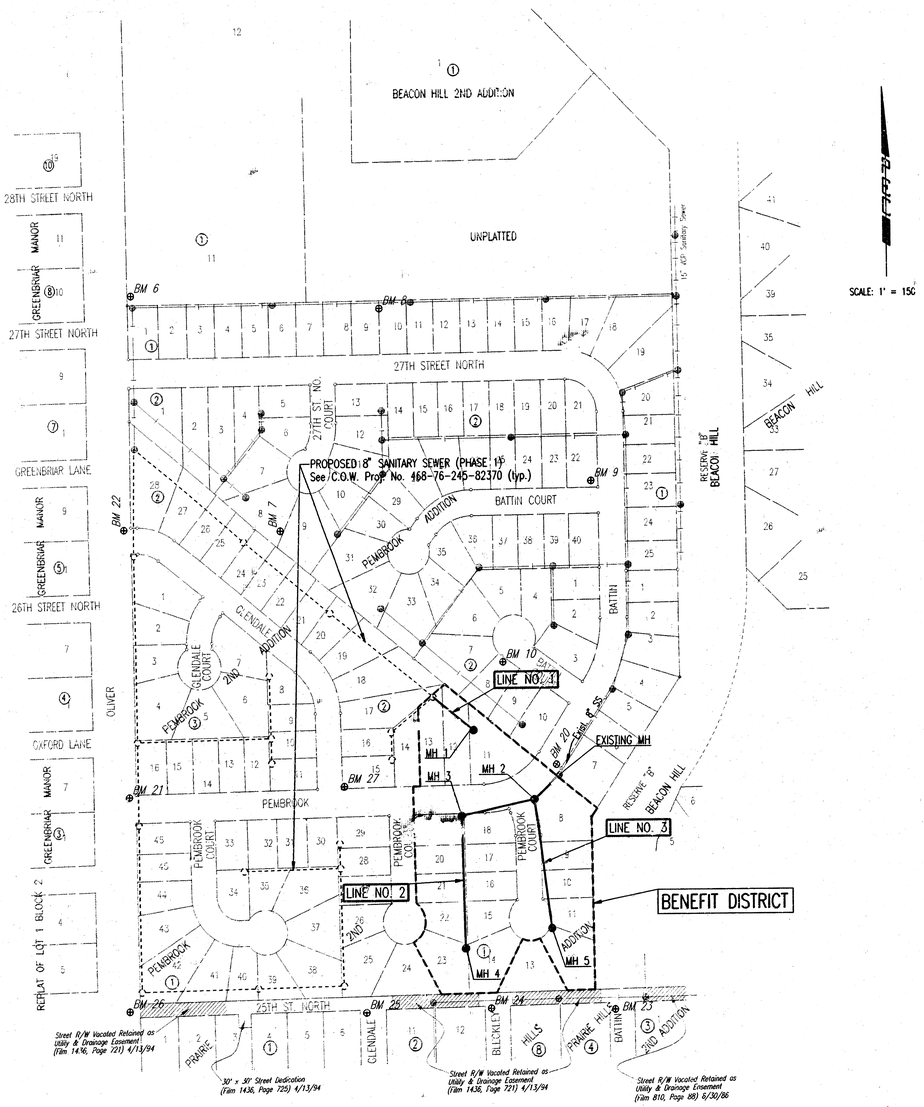

BENCH MARK LIST

BM 6 – RAILROAD SPIKE IN SOUTHEAST FACE OF DOUBLE TRUNKED 48" ELM NEAR NORTHWEST CORNER OF PEMBROOK ADDITION.
ELEV. = 168.69

BM 7 – "T" POST APPROXIMATELY 0.5' BELOW GRADE, 40' NORTH AND 10' EAST OF THE SOUTHERN MOST CORNER OF LOT 8, BLOCK 2, PEMBROOK ADDITION.
ELEV. = 170.91

BM 8 – "T" POST APPROXIMATELY 1' BELOW GRADE, 32' SOUTH OF THE NORTHWEST CORNER OF LOT 10, BLOCK 1, PEMBROOK ADDITION.
ELEV. = 171.00

BM 9 – "T" POST APPROXIMATELY 0.5' BELOW GRADE, 15' NORTHWEST OF THE SOUTHEAST CORNER OF LOT 22, BLOCK 2, PEMBROOK ADDITION.
ELEV. = 170.09

BM 10 – "T" POST APPROXIMATELY 5' SOUTH OF P.C., LOT 8, BLOCK 2, PEMBROOK 2ND ADDITION.
ELEV. = 175.55

BM 20 – CHISELED "d" EAST BACK OF CURB, NEAR PC OF CURB, NORTHEAST SIDE OF PEMBROOK STREET LOT 7, BLOCK 1, PEMBROOK 2ND ADDITION.
ELEV. = 177.02

BM 21 – CHISELED "d" ON MIDPOINT OF CURB @ THE NORTHEAST CORNER OF PEMBROOK STREET AND OLIVER, PEMBROOK 2ND ADDITION.
ELEV. = 169.96

BM 22 – CHISELED "d" ON MIDPOINT OF CURB @ THE NORTHEAST CORNER OF GLENDALE AND OLIVER, PEMBROOK 2ND ADDITION.
ELEV. = 165.96

BM 23 – CHISELED "d" NORTHEAST CORNER CONCRETE DRIVE OF HOUSE #2551 NORTH BATTIN SOUTH OF HEDGEROW @ NORTH END OF EXISTING STREET, PRAIRIE HILLS 2ND ADDITION.
ELEV. = 176.44

BM 24 – CHISELED "d" WEST TOP OF CURB BLECKLEY @ NORTH END OF EXISTING STREET @ HOUSE #2525, SOUTH SIDE OF HEDGEGROW, PRAIRIE HILLS.
ELEV. = 177.53

BM 25 – CHISELED "d" WEST TOP OF CURB GLENDALE, 2 FOOT SOUTH OF NORTH END EXISTING STREET @ HOUSE #4821 EAST 25TH STREET NORTH, SOUTH SIDE OF HEDGEROW, PRAIRIE HILLS.
ELEV. = 181.71

BM 26 – CHISELED "d" EAST TOP OF CURB OLIVER, @ ℄ OF 25TH STREET NORTH.
ELEV. = 175.18

BM 27 – "T" POST 5' NORTHEAST OF THE SOUTHWEST CORNER OF LOT 15, BLOCK 2, PEMBROOK 2ND ADDITION.
ELEV. = 178.62

GENERAL NOTES

1. ALL CONSTRUCTION AND MATERIALS TO COMPLY WITH CITY OF WICHITA SPECIFICATIONS AND STANDARDS.
2. ALL ELEVATIONS SHOWN ARE BASED ON CITY OF WICHITA DATUM.
3. THE CONTRACTOR SHALL LIMIT THE EXTENT OF TRENCH TO REMAIN OPEN OVERNIGHT AND WEEKENDS TO LESS THAN 50 FEET.
4. AT LEAST 72 HOURS PRIOR TO BEGINNING EXCAVATION (EXCLUDING WEEKENDS AND HOLIDAYS), THE CONTRACTOR SHALL CONTACT THE KANSAS ONE-CALL SYSTEM, A UTILITY LOCATION SERVICE, AT (316) 687-2470 TO REQUEST THE LOCAL UTILITY COMPANIES MARK ANY EXISTING LINES WITHIN THE PROJECT AREA.
5. UNDERGROUND UTILITY SERVICE LINES AND OVERHEAD UTILITY PO LINES ARE TO BE ADJUSTED AS NECESSARY BY OTHERS PRIOR T CONSTRUCTION UNLESS THE PLANS SPECIFICALLY CALL FOR THEIR ADJUSTMENT BY THE CONTRACTOR OR UNLESS THE PLANS SPECIFICALLY IDENTIFY A UTILITY TO BE ADJUSTED BY ITS OWNER DURING CONSTRUCTION. EXISTING UTILITIES AND THEIR LOCATIONS, AS SHOWN ON THE PLANS, REPRESENT THE BEST INFORMATION OBTAINABLE FOR THE DESIGN. THE CONTRACTOR WILL BE REQUIRED TO WORK AROUND EXISTING UTILITIES WITHIN THE RIGHT-OF-WAY WHICH DO NOT CONFLICT WITH PROPOSED CONSTRUCTION.
6. THE CONTRACTOR SHALL BE RESPONSIBLE FOR PRESERVING PROPERTY IRONS. THE CONTRACTOR WILL BE REQUIRED TO RE-ESTABLISH ANY PROPERTY IRONS WHICH ARE DAMAGED OR DESTROYED BY HIS CONSTRUCTION OPERATIONS. SUCH IRONS SHALL BE RE-ESTABLISHED BY A LICENSED LAND SURVEYOR IN ACCORDANCE WITH STATE LAWS. ALL COSTS FOR THIS WORK SHALL BE SUBSIDIARY TO THE LUMP SUM PRICE BID FOR "SITE RESTORATION".
7. CONTRACTOR SHALL PROVIDE POSITIVE DRAINAGE AWAY FROM ALL MANHOLE COVERS.
8. MANHOLES SHALL BE TYPE "P" MANHOLES. MANHOLES SHALL BE CONSTRUCTED IN ACCORDANCE WITH THE STANDARD SPECIFICATIONS AND THE STANDARD DETAIL DRAWINGS.
9. ALL LAWN/TURF AREAS DISTURBED BY CONSTRUCTION OF THE PROPOSED IMPROVEMENTS SHALL BE RESTORED WITH THE SAME GRASS/SOD AS EXISTING. RESTORATION OF DISTURBED AREAS SHALL INCLUDE, BUT NOT BE LIMITED TO, TOP SOIL PREPARATION, SEEDING, MULCH, AND/OR RESEEDING. ALL SEEDING/SODDING WORK SHALL BE IN ACCORDANCE WITH THE CITY OF WICHITA STANDARD SPECIFICATIONS AND THE CITY OF WICHITA ADMINISTRATIVE REGULATION NO. AR78 WHICH GOVERNS CLEANUP AND RESTORATION OR REPLACEMENT FOLLOWING CONSTRUCTION. ALL COSTS FOR THIS WORK SHALL BE SUBSIDIARY TO THE LUMP SUM PRICE BID FOR "SITE RESTORATION".
10. RUBBLE FROM THE REMOVAL OF MISCELLANEOUS STRUCTURES INCLUDING ANY TREES REMOVED, TREE TRIMMINGS, AND EXCESS EXCAVATION WHICH IS TO BE WASTED SHALL BE DISPOSED OF ON SITES PROVIDED BY THE CONTRACTOR. THESE SITES SHALL ALSO BE APPROVED BY THE ENGINEER AS TO SUITABILITY, APPEARANCE, AND SITE LOCATION. LOCATIONS THAT, IN THE OPINION OF THE ENGINEER, WILL LEAVE AN UNSIGHTLY APPEARANCE WILL NOT BE APPROVED. ALL DISPOSAL SITES MUST BE APPROVED BY THE KANSAS DEPARTMENT OF HEALTH AND ENVIRONMENT. MATERIAL EITHER STOCKPILED OR DISPOSED OF IN A FLOOD PLAIN WILL REQUIRE A KANSAS STATE BOARD OF AGRICULTURE PERMIT. ANY MATERIAL DUMPED IN WATERS OF THE UNITED STATES OR WETLANDS IS SUBJECT TO U.S. CORPS. OF ENGINEERS PERMITTING REGULATIONS. ANY MATERIAL BURIED OR STOCKPILED BEYOND APPROVED CONSTRUCTION LIMITS MAY REQUIRE ARCHAEOLOGICAL INVESTIGATIONS UNLESS BURIED IN A PREVIOUSLY APPROVED DISPOSAL LOCATION.
11. THE CONTRACTOR SHALL AVOID REMOVAL OR TRIMMING OF ANY TREES OR SHRUBS WHERE POSSIBLE. WHERE THE CONTRACTOR BELIEVES THE REMOVAL OR TRIMMING IS UNAVOIDABLE, HE SHALL COORDINATE SUCH WORK WITH THE ENGINEER. COSTS FOR TREE/SHRUB REMOVAL AND TRIMMING REGARDLESS OF SIZE SHALL BE CONSIDERED SUBSIDIARY TO THE LUMP SUM PRICE BID FOR "SITE CLEARING".
12. CONTRACTOR SHALL GRADE THE SANITARY SEWER ALIGNMENT TO THE PROFILE AND ELEVATIONS SHOWN ON THE EASEMENT GRADING PLAN. ALL COSTS FOR EASEMENT GRADING SHALL BE SUBSIDIARY TO THE LUMP SUM PRICE BID FOR "EASEMENT GRADING".
13. THE CONTRACTOR SHALL PREVENT ANY CONSTRUCTION DEBRIS FROM ENTERING THE EXISTING SANITARY SEWER DURING CONSTRUCTION.
14. THE CONTRACTOR SHALL GIVE ALL PROPERTY OWNERS AND/OR TENANTS OF DEVELOPED PROPERTY ABUTTING THE CONSTRUCTION OF THIS PROJECT A MINIMUM OF TEN (10) DAYS ADVANCE NOTICE PRIOR TO START OF CONSTRUCTION.
15. ALL APPROVED EXCESS EXCAVATION WHICH IS TO BE WASTED SHALL BE STOCKPILED WITHIN PEMBROOK 2ND ADDITION AT NO ADDITIONAL COST TO THE OWNER. STOCKPILE LOCATIONS SHALL BE AS DIRECTED BY MR. LARRY CHAMBERS, AT (316) 263-3201 AND IN ACCORDANCE WITH GENERAL NOTE NO. 10 ABOVE.
16. CONTRACTOR IS REQUIRED TO MAINTAIN CONTINUOUS FLOW OF SEWAGE IN EXISTING MAINS AT ALL TIMES.
17. THE CONTRACTOR SHALL SEED ALL AREAS DISTURBED BY CONSTRUCTION ACTIVITIES WITH TEMPORARY RYE GRASS. RYE GRASS SEED SHALL BE PLANTED AT A MINIMUM RATE OF SIX (6) POUNDS PER ONE THOUSAND (1,000) SQUARE FEET. THIS TEMPORARY SEEDING MAY BE OMITTED ONLY IF OTHER SEEDING IS REQUIRED IN ACCORDANCE WITH GENERAL NOTE NO. 9 ABOVE. TEMPORARY SEEDING OR PERMANENT SEEDING/SODDING SHALL BE APPLIED WITHIN 14 DAYS AFTER THE AREA HAS BEEN DISTURBED.
18. THE CONTRACTOR SHALL NOT BURY MANHOLES THAT HAVE RIM ELEVATIONS WHICH ARE LOWER THAN EXISTING GROUND AT THE MANHOLE. THE GROUND AROUND SUCH MANHOLES AND ALONG THE SEWER ALIGNMENT SHALL BE BACKFILLED TO THE APPROXIMATE ELEVATION OF THE PROPOSED GROUND ELEVATION SHOWN ON THE PLAN/PROFILE SHEETS. THE CONTRACTOR SHALL PROVIDE DRAINAGE AWAY FROM THESE MANHOLES AND SEWER LINES BY CONSTRUCTION OF TEMPORARY DITCHES OR SLOPING THE GROUND AS REQUIRED. ALL COSTS FOR THIS WORK SHALL BE CONSIDERED SUBSIDIARY TO THE INSTALLED BID PRICE FOR MANHOLES OR PIPE.
19. THE CONTRACTOR SHALL PROVIDE MOUNDED EARTH AT MANHOLES AND CLEANOUTS THAT HAVE TOP ELEVATIONS GREATER THAN 1 FOOT ABOVE FINISHED GRADE, AS SHOWN ON THE PLANS. COSTS FOR MOUNDING SHALL BE CONSIDERED SUBSIDIARY TO THE LUMP SUM PRICE BID FOR "EASEMENT GRADING."
20. INTERURBAN TRAFFIC GENERATED OUTSIDE THE PROJECT AREA AND LOCAL BUSINESS OR RESIDENTIAL TRAFFIC GENERATED WITHIN THE PROJECT AREA ARE TO BE CARRIED THROUGH CONSTRUCTION AS FURTHER PROMULGATED BY PROJECT SPECIAL PROVISIONS.

SEWER SERVICE TABLE

(See detail and notes, sheet no. 9)

NO.	TYPE	LOCATION: LOT NO.	BLOCK NO.	LINE NO.	STATION/ DIRECTION	FOR INFORMATION ONLY: APPROXIMATE LENGTH 4" PIPE VERTICAL	APPROXIMATE LENGTH 4" PIPE HORIZONTAL	RECORD INFORMATION (TO BE COMPLETED BY PROJECT INSPECTOR): DISTANCE FROM NEAREST MANHOLE UPSTREAM	DISTANCE FROM NEAREST MANHOLE DOWNSTREAM	NO.
1	8"x4" Tee Saddle	13	2	1	0+10/Rt.	12'	4'			1
2	8"x4" Tee Saddle	12	2	1	0+55/Rt.	12'	4'			2
3	4" MH Serv. Conn.	11	2	1	1+20.0/S	10'	4'			3
4	8"x4" Tee Saddle	18	1	2	2+65/Lt.	8'	14'			4
5	8"x4" Tee Saddle	19	1	2	2+75/Rt.	8'	4'			5
6	8"x4" Tee Saddle	17	1	2	3+25/Lt.	9'	14'			6
7	8"x4" Tee Saddle	20	1	2	3+35/Rt.	9'	4'			7
8	8"x4" Tee Saddle	16	1	2	3+90/Lt.	10'	14'			8
9	8"x4" Tee Saddle	21	1	2	4+00/Rt.	10'	4'			9
10	8"x4" Tee Saddle	15	1	2	4+55/Lt.	10'	14'			10
11	8"x4" Tee Saddle	22	1	2	4+65/Rt.	10'	4'			11
12	4" MH Serv. Conn.	14	1	2	5+48.8/SE	9'	14'			12
13	4" MH Serv. Conn.	23	1	2	5+48.8/SW	9'	4'			13

NOTES:
1. Vertical Riser Pipe shall be extended to 2' minimum above ground water elevation and 4' maximum below proposed ground elevation.

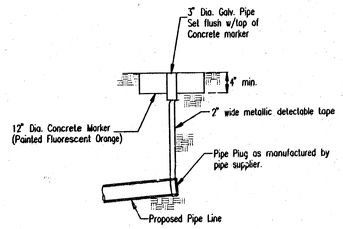

BURIED PIPE PLUG & FLAG DETAIL
(PLUGGING & STAKING SHALL BE SUBSIDIARY TO THE LUMP SUM PRICE BID FOR SITE RESTORATION)

No.	Revision	By	Date

LATERAL 70, MAIN 5
SANITARY SEWER NO. 23
(PHASE 2)

KEY MAP AND GENERAL NOTES

MICHAEL E. LINDEBAK, P.E.– CITY ENGINEER
CITY OF WICHITA PROJECT NO. 468-76-245-82592-000-000-001

PROFESSIONAL ENGINEERING CONSULTANTS, P.A.
ENGINEERS
WICHITA, KANSAS

Designed by MDK	Job No. 34-98375-1	Sht. 2 of 9
Drawn by BB	Date JUNE 1998	

MICHAEL D. KRUSE — 13944 — 10/13/98 — KANSAS — PROFESSIONAL ENGINEER

I:\98-MDK_GEOS_TBE_SURV_1=150.00
G:\1998\98375\100\Sheets\SHEET.MAP 10-05-1998 09:24:25 am



SCALE: 1" = 100'

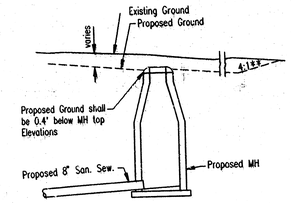

TYPICAL PROFILE

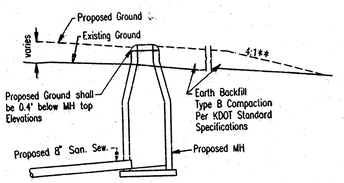

TYPICAL PROFILE

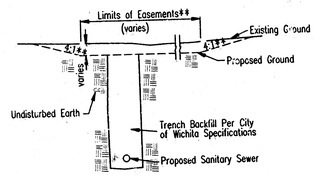

TYPICAL SECTION

"CUT" SITUATIONS

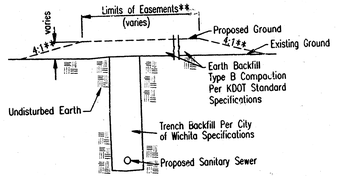

TYPICAL SECTION

"FILL" SITUATIONS

EASEMENT GRADING DETAILS

= AREAS TO BE GRADED

H.P. = HIGH POINT
M.E. = MATCH EXISTING

** Graded widths and slopes may vary as approved by the Engineer to minimize conflict with existing trees.

Easement Grading will be bid on a lump sum basis for grading the easements to the profile and elevations shown on the Easement Grading Plan (this sheet). Approximate quantities of earthwork for easement grading are shown below. These approximate quantities are given for information only. The Contractor should verify the quantities when preparing the proposal.

Cut 40 C.Y. (Approximate)

Fill 680 C.Y. (Approximate)

No.	Revision	By	Date

LATERAL 70, MAIN 5
SANITARY SEWER NO. 23

EASEMENT GRADING PLAN

MICHAEL E. LINDEBAK, P.E.– CITY ENGINEER
CITY OF WICHITA PROJECT NO. 468-76-245-82592-000-000-001

PROFESSIONAL ENGINEERING CONSULTANTS, P.A.
ENGINEERS
WICHITA, KANSAS

Designed by KER	Job No. 34-98375-1	Sht. 3 of 9
Drawn by TLS	Date June 1998	

PEMBROOK

AN ADDITION, TO WICHITA, SEDGWICK COUNTY, KANSAS

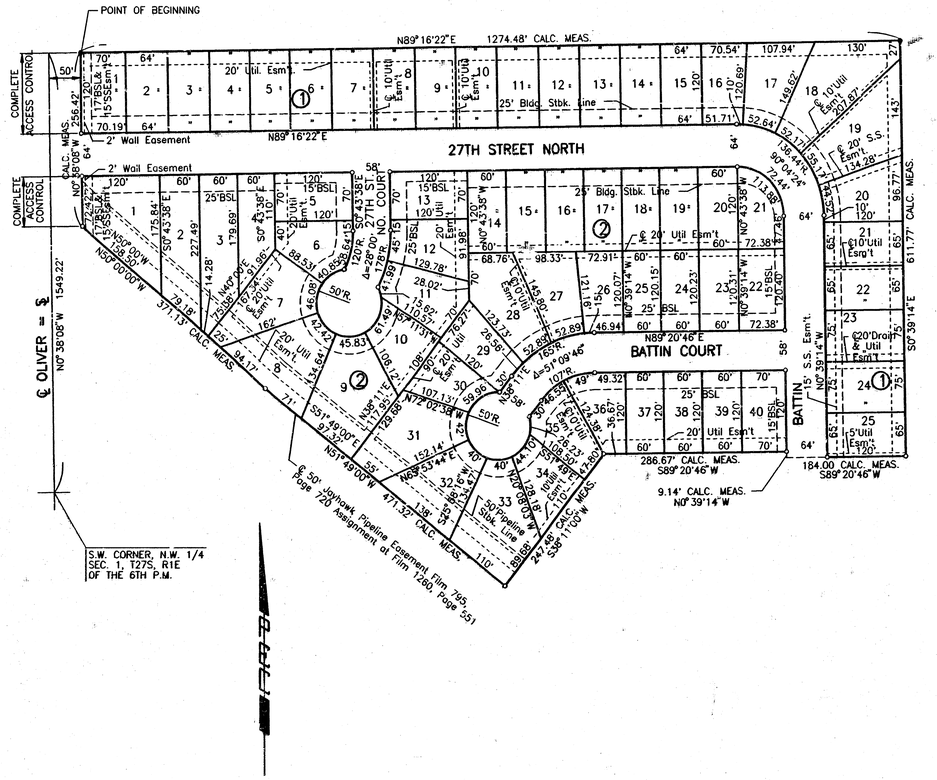

SCALE: 1"=100'

o= IRON SET
● IRON FOUND
CALC. MEAS. = CALCULATED FROM MEASUREMENT
MEAS. = MEASURED

S.S. = SANITARY SEWER
B.S.L. = BUILDING SETBACK LINE

B.M. – DISC 29' NORTH AND 33' EAST OF CENTERLINE OLIVER AND 29TH STREET NORTH.
ELEV.=159.68 CITY DATUM

B.M. – RAILROAD SPIKE IN S.W. FACE OF POWER POLE 26.5' NORTH OF 1/16 CORNER, 1/4 MILE EAST OF 29TH STREET NORTH AND OLIVER.
ELEV.=161.18 CITY DATUM

MINIMUM PAD ELEVATION (LOWEST OPENING) AS FOLLOWS:

BLOCK 1		
LOT 18	ELEV. 164.00	CITY DATUM
LOTS 19 THROUGH 21	ELEV. 165.00	CITY DATUM
LOTS 22 AND 23	ELEV. 166.00	CITY DATUM
LOTS 24 AND 25	ELEV. 167.00	CITY DATUM

THIS ADDITION IS SUBJECT TO THE REQUIREMENTS OF THE BEACON HILL, C.U.P., DP-147 ON FILE WITH THE METROPOLITAN AREA PLANNING DEPARTMENT.

No.	Revision	By	Date

LATERAL 70, MAIN 5
SANITARY SEWER NO. 23

PLAT

MICHAEL E. LINDEBAK, P.E.– CITY ENGINEER
CITY OF WICHITA PROJECT NO. 468-76-245-82592-000-000-001

PROFESSIONAL ENGINEERING CONSULTANTS, P.A.
ENGINEERS
WICHITA, KANSAS

Designed by PEC	Job No. 34-98375-1	Sht. 4 of 9
Drawn by DEP	Date June 1998	

PEMBROOK 2ND ADDITION
TO WICHITA, SEDGWICK COUNTY, KANSAS

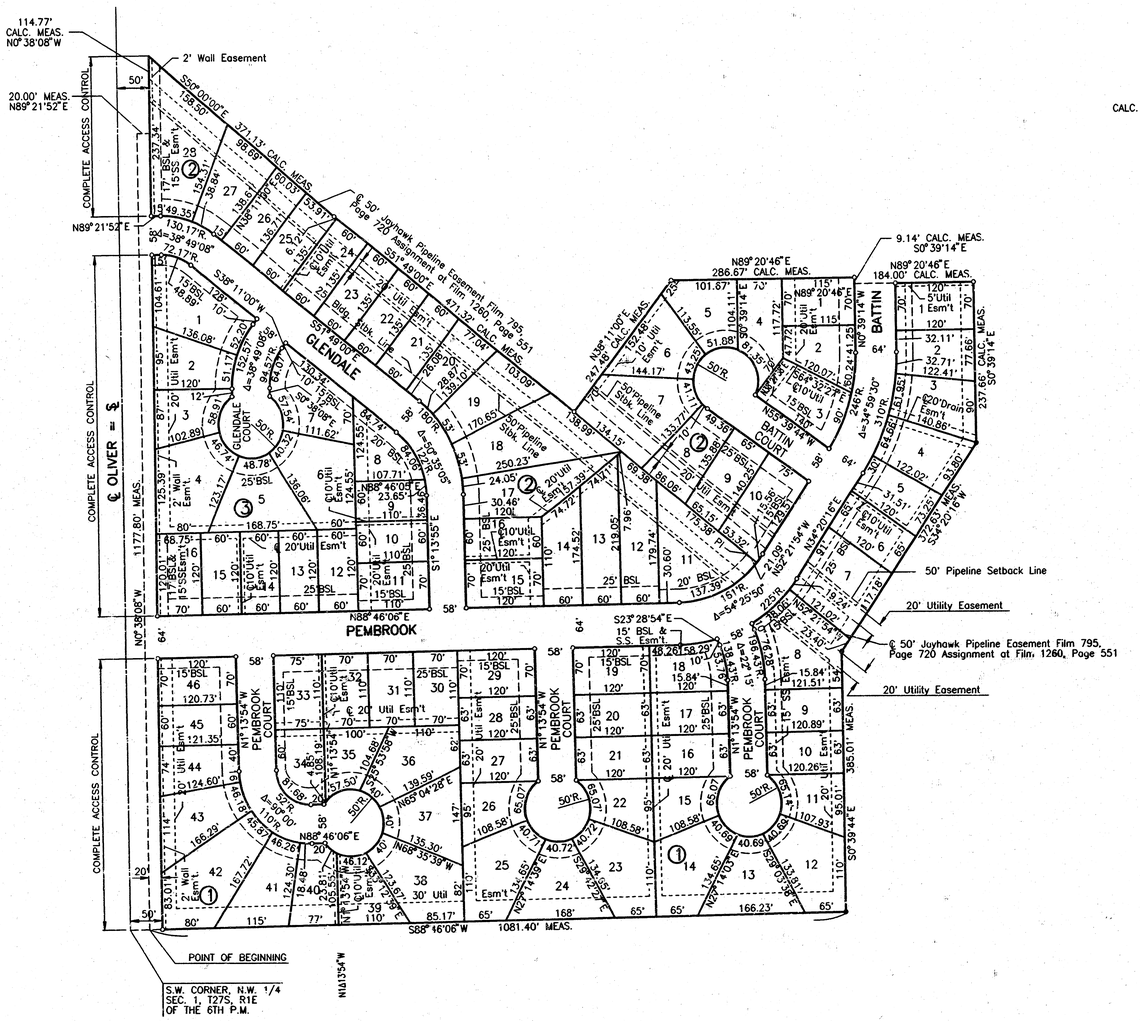

SCALE: 1"=100'

○= IRON SET
● IRON FOUND
CALC. MEAS. = CALCULATED FROM MEASUREMENT
MEAS. = MEASURED

S.S. = SANITARY SEWER
B.S.L. = BUILDING SETBACK LINE

B.M. – DISC 29' NORTH AND 33' EAST OF CENTERLINE OLIVER AND 29TH STREET NORTH.
ELEV.=159.68 CITY DATUM

B.M. – RAILROAD SPIKE IN S.W. FACE OF POWER POLE 26.5' NORTH OF 1/16 CORNER, 1/4 MILE EAST OF 29'H STREET NORTH AND OLIVER.
ELEV.=161.18 CITY DATUM

MINIMUM PAD ELEVATION (LOWEST OPENING) AS FOLLOWS:

BLOCK 1		
LOT 1	ELEV. 167.00	CITY DATUM
LOT 2	ELEV. 168.00	CITY DATUM
LOTS 3 AND 4	ELEV. 169.00	CITY DATUM
LOTS 5 THROUGH 7	ELEV. 170.00	CITY DATUM
LOTS 8 AND 9	ELEV. 171.00	CITY DATUM
LOTS 10 THROUGH 12	ELEV. 172.00	CITY DATUM

THIS ADDITION IS SUBJECT TO THE REQUIREMENTS OF THE BEACON HILL, C.U.P., DP-147 ON FILE WITH THE METROPOLITAN AREA PLANNING DEPARTMENT.

No.	Revision	By	Date

LATERAL 66, MAIN 5
SANITARY SEWER NO. 23

PLAT

MICHAEL E. LINDEBAK, P.E.– CITY ENGINEER
CITY OF WICHITA PROJECT NO. 468-76-245-82592-000-000-001

PROFESSIONAL ENGINEERING CONSULTANTS, P.A.
ENGINEERS
WICHITA, KANSAS

Designed by PEC	Job No. 34-98375-1	Sht. 5 of 9
Drawn by DEP	Date June 1998	

LINE NO. 1 (PHASE 1), Sta. 8+83.6=
LINE NO. 1 (PHASE 2), Sta. 0+00.0
MH 3 (PHASE 1)

Sta. 1+20.0
Const. MH 1
Standard MH

Sta. 0+00.0
Existing MH

Sta. 0+30.0
Remove 8" Plug from Existing 8" PVC Pipe and Begin Sewer Construction *

Sta. ~~0+88.1~~ 0+88.2
Const. MH 2
Standard MH

Sta. 2+54.0
Const. MH 3
Standard MH

Sta. 5+48.8
Const. MH 4
Standard MH

LINE NO. 2, Sta. ~~0+88.1~~= 0+88.2
LINE NO. 3, Sta. 0+00.0
MH 2

Sta. ~~2+88.5~~ 2+86.6
Const. MH 5
Standard MH

SCALE:
PLAN: HORIZ. & LONG. 0 40 80
PROFILE: HORIZ. SAME AS ABOVE
VERT.

8" Steel Gas Line (Jayhawk)
GAS 20' Util. Esm't.
20' Utility Easement
15' S.S. Esm't.
5' sidewalk
Asphalt
South Sidwk.
Curb Sidwk.
Sign
MAIN
PEMBROOK COURT
Limits of Prop. Pvmt.
Prop. 8" W.L. (by others)
Install 1-4" Stub and Plug
LINE NO. 3 See this sheet
LINE NO. 2 See this sheet
CAUTION !!! Prop. 8" Waterline (by others)
Install 120.0 L.F. 8" Pipe
Install 50.1 L.F. 8" PVC Pipe
Install 173.9 L.F. 8" Pipe
Install 294.8 L.F. 8" Pipe
Install 289.5 L.F. 8" Pipe

* PRIOR TO BEGINNING CONSTRUCTION, THE CONTRACTOR SHALL EXCAVATE THE EXISTING 8" PVC PIPE AT SANITARY SEWER STATION 0+30.00 LINE NO. 2 TO VERIFY ITS HORIZONTAL AND VERTICAL LOCATION. THE PIPE LOCATION SHALL BE REPORTED TO THE ENGINEER SO THAT ANY NECESSARY PLAN MODIFICATIONS CAN BE MADE. ANY ADDITIONAL LABOR OR MATERIALS NECESSARY TO COMPLETE THE CONNECTION SHALL BE CONSIDERED SUBSIDIARY TO THE PROJECT.

① ② DENOTES SEWER SERVICE. SEE SHEET NOS. 2 AND 9 FOR SEWER SERVICE SCHEDULE AND DETAILS

MICHAEL D. KLEBA 13944 KANSAS PROFESSIONAL ENGINEER

LINE NO. 1

Existing MH Top Elev.= 180.0
Proposed Ground
Existing Ground
MH 1 Top Elev.= 170.5
E In = 163.65 from LINE NO. 1 (Phase 1)
E Out= 163.45
E In = 166.18 from 1-4" Service (S)
E Out= 165.98
E In = 165.80
120.0 L.F. 8" Pipe @ 2.00%

LINE NO. 2

Existing MH Top Elev.= 177.81
Begin Line No. 2
Top mound= 177.9
MH 2 Top Elev.= 178.3
Stat. & Offset of Proposed Sewer Connection
Proposed Ground (By Others)
MH 3 Top Elev.= 178.6
Existing Ground
E In = 166.13 from LINE NO. 3
E Out= 164.11
E In= 164.05
30.0 L.F. 8" Pipe @ 1.50%
E Out= 165.53 *
E In= 165.43
50.1 L.F. 8" PVC Pipe @ 1.60%
E Out= 166.63
E In= 166.53
173.9 L.F. 8" Pipe @ 0.40%
E In = 168.33 from 2-4" Services (SW & SE)
MH 4 Top Elev.= 181.4
E Out= 168.20
294.8 L.F. 8" Pipe @ 0.40%

Sta. 0+97.6 L.T. Sta. 1+34.6
Place 37 L.F. of Excavable Flowable Fill from top of pipe bedding to Elev.= 174.7

LINE NO. 3

Top mound= 177.9
MH 2 Top Elev.= 178.3
Proposed Ground (By Others)
Top mound= 179.1
Existing Ground
MH 5 Top Elev.= 179.5
E In = 165.93 from LINE NO. 2
E Out= 165.93
E In= 166.13
E In = 167.62 from 1-4" Stub (SE)
E Out= 167.29
289.5 L.F. 8" Pipe @ 0.40%

LATERAL 70, MAIN 5
SANITARY SEWER NO. 23
(PHASE 2)
LINE NO. 1, 2 & 3
MICHAEL E. LINDEBAK, P.E. - CITY ENGINEER
CITY OF WICHITA PROJECT NO. 468-76-245-82592-000-000-001

PROFESSIONAL ENGINEERING CONSULTANTS, P.A.
ENGINEERS
WICHITA, KANSAS
Designed By MDK
Drawn By BB
Job No. 34-98375-1
Date June 1998
Sheet 6 of 9

DSNR: MDK OPER: TMF SCALE: 1=40.00
Q:\1998\98375\001\SSPhase2\SSP1 10-05-1998 08:27:21 am

SEWER APPURTENANCES DETAILS

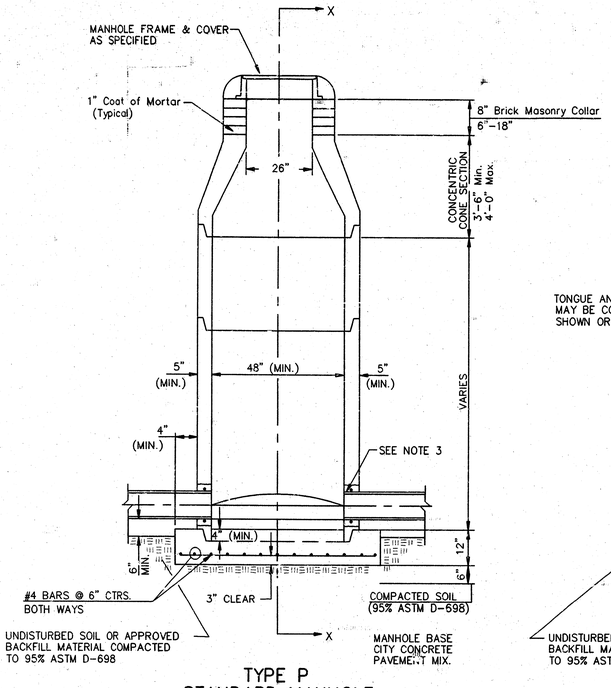

TYPE P
STANDARD MANHOLE

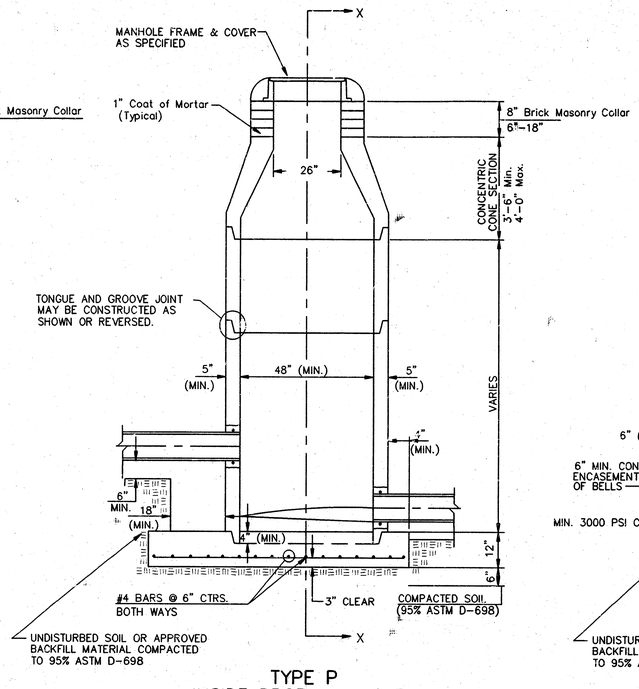

TYPE P
INSIDE DROP MANHOLE

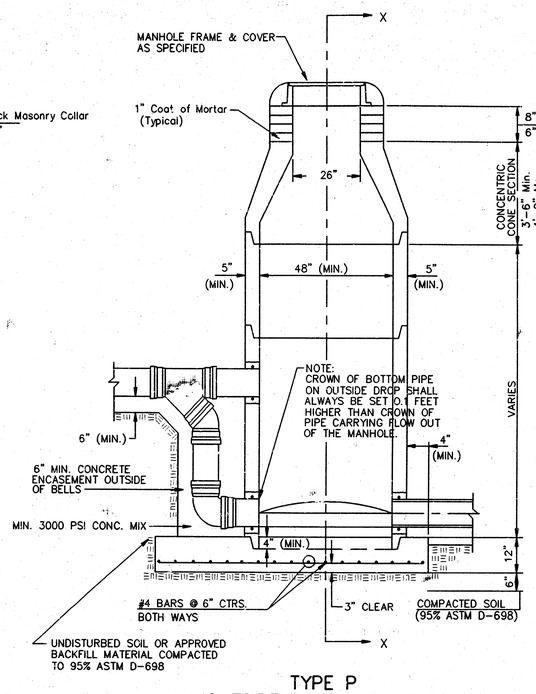

TYPE P
OUTSIDE DROP MANHOLE

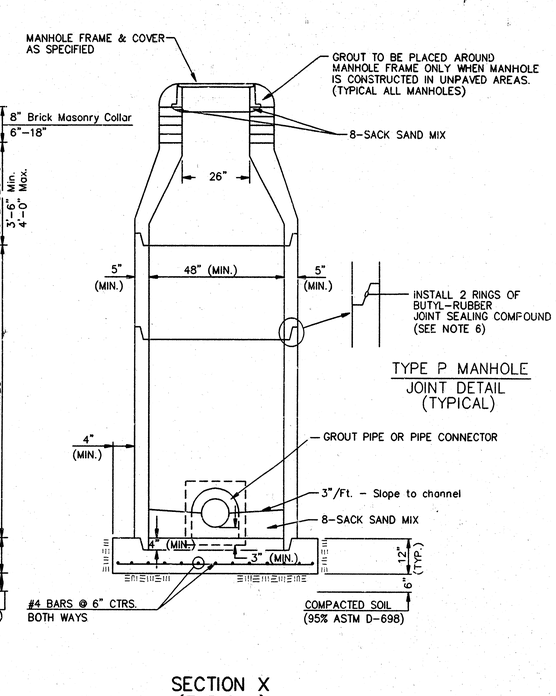

SECTION X
(TYPICAL)

GENERAL NOTES

PRECAST MANHOLE NOTES

1. ALL PRECAST CONCRETE MANHOLE SECTIONS SHALL CONFORM TO THE LATEST REVISIONS OF A.S.T.M. C478 AS MODIFIED BY THE SPECIFICATIONS.
2. NON-SHRINK GROUT SHALL BE NON-METALLIC TYPE.
3. APPROVED FLEXIBLE WATERSTOP GASKETS SHALL BE INSTALLED TO JOIN THE SEWER TO THE MANHOLE WALL WHEN A.B.S. COMPOSITE PIPE OR P.V.C. PIPE IS USED. FOR OTHER TYPES OF PIPE THE SEWER SHALL BE GROUTED IN PLACE WITH NON-SHRINK GROUT. THE SEWER PIPE SHALL BE SUPPORTED WITH CONCRETE ENCASEMENT A MINIMUM OF 3 FEET FROM THE MANHOLE WALL AND TO THE FIRST JOINT FOR V.C.P. SUCH THAT THE JOINT REMAINS FLEXIBLE.
4. ALL INSIDE SURFACES OF THE CONCRETE MANHOLE WHICH WOULD BE EXPOSED TO SEWER GAS SHALL BE COATED WITH 2 COATS TNEMEC SERIES 66 HI-BUILD EPOXOLINE, DRY THICKNESS OF 8 MILS (MIN.).
5. EXTERIOR MANHOLE WALLS SHALL BE COATED WITH 1 COAT MOBILARMA 633 BITUMINOUS COATING.
6. JOINT SEALING COMPOUND SHALL BE KENT SEAL NO. 2 OR APPROVED EQUAL.
7. PRECAST MANHOLES SHALL BE SET AT LEAST 4 INCHES INTO THE MANHOLE BASE.
8. TOP OF MANHOLE FLOOR SLAB SHALL BE AT LEAST 3 INCHES BELOW THE FLOW LINE OF THE OUTLET PIPE TO INSURE SUFFICIENT MINIMUM THICKNESS OF SHAPED INVERT.
9. LIFTING HOLES SHALL BE FILLED WITH NON-SHRINK GROUT AND THE INTERIOR SURFACE COATED AS SPECIFIED.
10. MORTAR USED IN MASONRY CONSTRUCTION SHALL CONTAIN 8 SACKS OF CEMENT PER CUBIC YARD. CONCRETE USED IN MANHOLE BASES SHALL CONFORM TO THE REQUIREMENTS OF CONCRETE FOR CONCRETE PAVEMENT CONSTRUCTION AS SPECIFIED IN THE CITY STANDARD PAVING SPECIFICATIONS USING CITY CONCRETE PAVEMENT MIX WITHOUT AIR ENTRAINING ADMIXTURE. MORTAR SHALL BE PLACED AROUND THE MANHOLE RING AS SHOWN ON THE DRAWINGS WHEN MANHOLES ARE CONSTRUCTED IN UNPAVED AREAS. MANHOLES CONSTRUCTED WHERE PIPE SIZES ARE SMALLER THAN 24" SHALL HAVE AN INSIDE DIAMETER OF 4'. MANHOLES CONSTRUCTED WHERE PIPE SIZES ARE 24" OR LARGER SHALL HAVE AN INSIDE DIAMETER OF 5'. COMPLETED MANHOLE SHALL BE WITHOUT LEAKS AND WATER TIGHT.
11. REINFORCING STEEL SHALL BE INSTALLED IN THE MANHOLE BASES AND SHALL CONSIST OF NO. 4 BARS PLACED ON 6" CENTERS IN BOTH DIRECTIONS. THE MANHOLE BASE REINFORCEMENT SHALL BE PLACED AT LEAST 3" ABOVE THE BOTTOM OF THE MANHOLE BASE. ALL COSTS FOR FURNISHING AND INSTALLING REINFORCING STEEL SHALL BE INCLUDED IN THE UNIT PRICE BID FOR THE MANHOLE.
12. OPENINGS SHALL BE CUT INTO THE MANHOLE WALL WHEN OUTSIDE DROPS ARE CONSTRUCTED ON EXISTING MANHOLES. SUCH OPENINGS CUT INTO EXISTING MANHOLES SHALL BE AS SMALL AS PRACTICAL TO FACILITATE INSTALLING AND GROUTING THE NEW PIPE IN PLACE. WATERSTOP GASKETS SHALL BE USED WITH P.V.C. AND A.B.S. COMPOSITE PIPE. THE NEW PIPE SHALL BE GROUTED INTO THE OPENING USING AN APPROVED NONSHRINK GROUT FOR THE FULL MANHOLE WALL THICKNESS. THE EXTERIOR OF THE COMPLETED CONNECTION SHALL BE SEALED WITH AN APPROVED BITUMINOUS COATING SUCH THAT THE CONNECTION WILL BE WATER TIGHT. FLOOR OF MANHOLE SHALL BE MODIFIED TO FORM NEW FLOW CHANNEL FOR THE NEW CONNECTION AS INDICATED BY THE DRAWING. THIS WORK, INCLUDING MODIFICATION OF MANHOLE FLOOR, SHALL BE PAID FOR AT THE UNIT PRICE BID FOR OUTSIDE DROP STACK CONSTRUCTED ON EXISTING MANHOLE.
13. THE FLOORS OF ALL MANHOLES SHALL BE SHAPED WITH FLOW CHANNELS SUCH THAT THE MANHOLES WILL BE SELF CLEANING AND FREE OF AREAS WHERE SOLIDS COULD BE DEPOSITED AS SEWAGE FLOWS THROUGH THE MANHOLE FROM ALL INLET PIPES TO THE OUTLET PIPE. FLOW CHANNELS SHALL BE FORMED TO MATCH THE BOTTOM HALVES OF THE INFLOWING PIPES AND THE OUTFLOWING PIPE AS SHOWN BY THE DRAWINGS EXCEPT FOR INSIDE DROP MANHOLES. FLOW CHANNELS FOR INSIDE DROP MANHOLES SHALL BE CONSTRUCTED AS INDICATED BY THE DRAWING. MANHOLE FLOORS SHALL HAVE SLOPES OF 3 INCHES PER FOOT IN THE AREAS OUTSIDE OF THE FLOW CHANNELS SLOPED TOWARD THE FLOW CHANNELS. PIPES LAID THROUGH MANHOLES SHALL HAVE THE TOP HALF REMOVED TO NEAT LINES FOR THE FULL INSIDE DIAMETER OF THE MANHOLE. MANHOLE FLOORS SHALL THEN BE SHAPED AROUND THE BOTTOM HALF OF THE PIPE WHICH FORMS THE FLOW CHANNEL.
14. PIPES INSTALLED WITHIN THE EXCAVATION MADE FOR THE MANHOLE SHALL BE CRADLED WITH CONCRETE TO THE LIMITS OF THE MANHOLE EXCAVATION. WHEN CLAY PIPE IS USED, THE CRADLE SHALL EXTEND TO THE FIRST JOINT OUTSIDE THE MAHOLE. THE CRADLE SHALL BE TERMINATED AT THE CLAY PIPE JOINT IN A MANNER WHICH WILL MAINTAIN THE FLEXIBILITY OF THE JOINT. COST OF CRADLE WITHIN MANHOLE EXCAVATION OR TO CLAY PIPE JOINTS ADJACENT TO MANHOLE SHALL BE INCLUDED IN THE UNIT PRICE BID FOR THE MANHOLE.
15. MANHOLE COVER CASTINGS AND MANHOLE FRAME CASTINGS SHALL CONFORM TO THE REQUIREMENTS AS INDICATED IN THE STANDARD SPECIFICATIONS AND AS SHOWN IN THE STANDARD DETAIL DRAWING.
16. THE VERTICAL DROP IN INSIDE DROP MANHOLES SHALL NOT EXCEED 2' FOR INFLOWING PIPES SIZED 12" OR SMALLER AND 2' FOR INFLOWING PIPES LARGER THAN 12". THE CROWNS OF INFLOWING PIPES SHALL NEVER BE LOWER THAN THE CROWN OF THE OUTFLOWING PIPE.
17. STANDARD MANHOLES AND STANDARD INSIDE DROP MANHOLES SHALL BE BID AS STANDARD MANHOLES FOR THE TYPE AND DIAMETER INDICATED. OUTSIDE DROP MANHOLES SHALL BE BID AS STANDARD OUTSIDE DROP MANHOLES FOR THE TYPE AND DIAMETER INDICATED. ALL MANHOLE DIAMETERS WILL BE 4' UNLESS INDICATED OTHERWISE.
18. A BRICK MASONRY COLLAR SHALL BE INSTALLED BETWEEN THE CAST IRON FRAME AND THE CONCENTRIC CONE. THE COLLAR WILL HAVE 8" WALLS AND A VERTICAL HEIGHT OF 6" MINIMUM AND 18" MAXIMUM. A 1" COAT OF MORTAR WILL BE PLASTERED ON THE OUTSIDE OF THE COLLAR. THE USE OF PRE-CAST CONCRETE SPACERS FOR MANHOLE TOP ADJUSTMENT IS ALSO ALLOWED.

THE CITY OF WICHITA

CITY ENGINEER'S OFFICE
CITY HALL - SEVENTH FLOOR
455 NORTH MAIN STREET
WICHITA, KANSAS 67202
(316) 268-4501
(316) 268-4114 FAX

STANDARD TYPE 'P' MANHOLES

M. E. LINDEBAK P.E. - CITY ENGINEER

PROJECT NUMBER	INDEX CODE
468-82592	743724
DATE: MAR 96	SHEET 7 OF 9

MANHOLE FRAME AND COVER DETAIL

ADOPTED AS STANDARD DESIGN BY
CITY OF WICHITA, KANSAS

MANHOLE COVER
Weight = 180 Lbs.

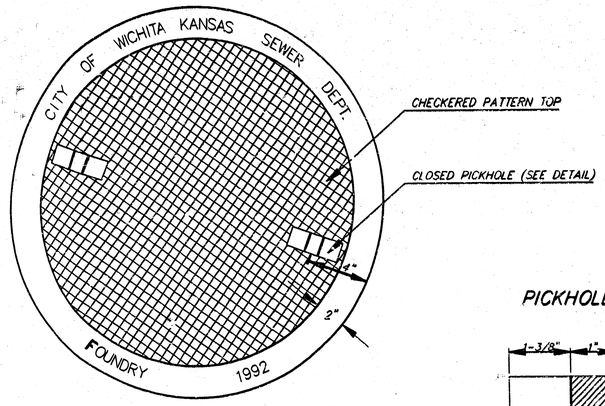

TOP VIEW

PICKHOLE DETAIL

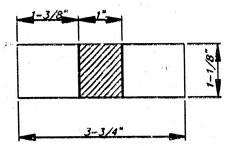

TOP VIEW

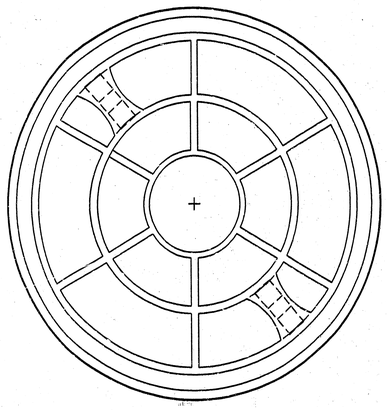

BOTTOM VIEW

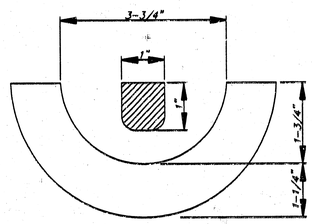

SECTION VIEW

MANHOLE FRAME
Weight = 240 Lbs.

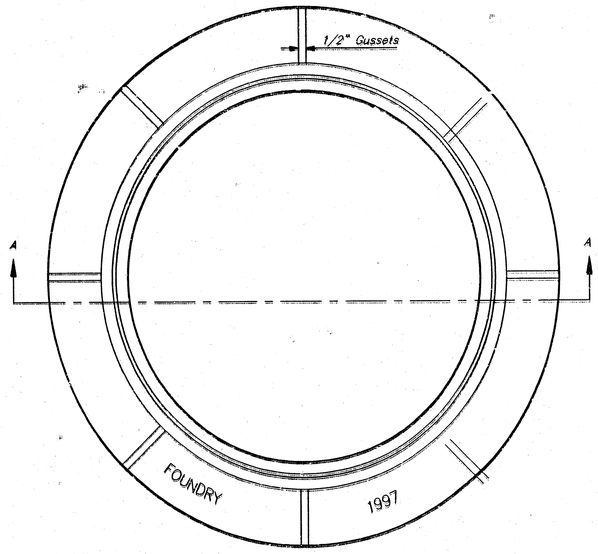

TOP VIEW

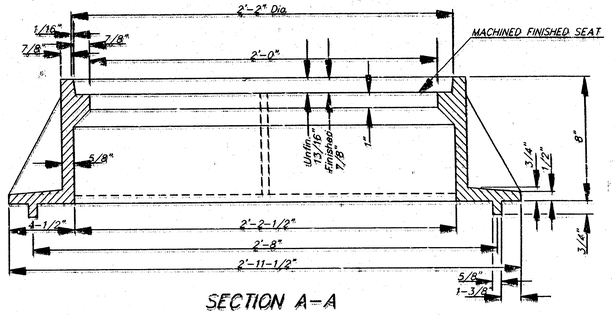

SECTION A-A
MUD RING

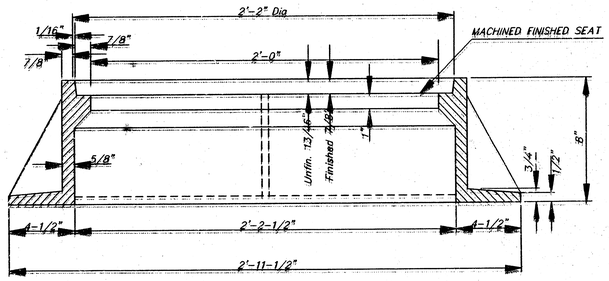

SECTION A-A

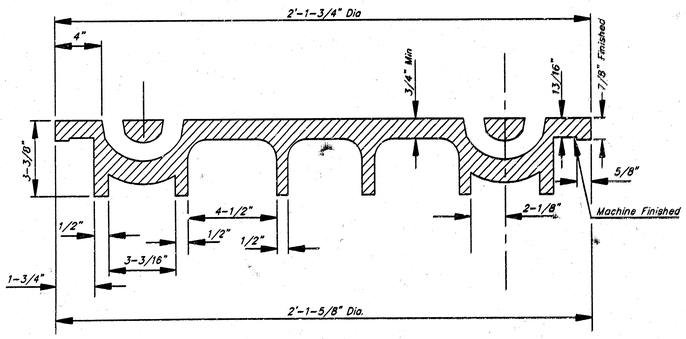

SECTION VIEW

GENERAL NOTES

1. MANHOLE CASTINGS SHALL BE MANUFACTURED USING GOOD QUALITY GRAY IRON CONFORMING TO CLASS 30 OF A.S.T.M. DESIGNATION A-48. DIMENSIONS AND WEIGHTS SHOWN ON THE DETAILED DRAWINGS SHALL BE CONSIDERED AS MINIMUM REQUIREMENTS AND ANY DEVIATIONS FROM THE DIMENSIONS SHOWN MUST BE SPECIFICALLY APPROVED. THE FINISHED CASTINGS SHALL BE OF UNIFORM QUALITY, FREE FROM BLOWHOLES, POROSITY, HARD SPOTS, SHRINKAGE DISTORTIONS OR OTHER DEFECTS.
2. MANHOLE CASTINGS SHALL WEIGH A MINIMUM OF 180 POUNDS ON THE SOLID COVER AND 240 POUNDS ON THE MANHOLE RING. THIS IS A TOTAL OF 420 POUNDS ON A RING AND COVER SET. CASTINGS WEIGHING LESS THAN THE MINIMUM SPECIFICATIONS WILL NOT BE ACCEPTED.
3. MANHOLE CASTINGS SHALL BE MANUFACTURED SUCH THAT A COVER MANUFACTURED BY ANY ONE FOUNDARY WILL FIT INTERCHANGEABLY INTO A FRAME MANUFACTURED BY ANOTHER FOUNDRY AND STILL MEET ALLOWABLE CLEARANCES AND NON-ROCKING REQUIREMENTS. THIS WILL REQUIRE MANUFACTURING OF THE MATCHING FACES ON THE COVER AND THE FRAME TO CLOSE TOLERANCES.
4. THE OUTSIDE CIRCUMFERENCE OF THE VERTICAL FACE OF THE COVER AND THE INSIDE CIRCUMFERENCE OF THE VERTICAL FACE IN THE FRAME RECESS SHALL BE MANUFACTURED TO TOLERANCES SUCH THAT THE CLEARANCE BETWEEN THE COVER AND FRAME WILL NOT EXCEED 1/8" AT ANY POINT AROUND THE CIRCUMFERENCE OF THE COVER. THE SEATING SURFACES BETWEEN THE COVER AND FRAME SHALL BE MACHINED SUCH THAT THESE SEATING SURFACES SHALL MAKE FULL CONTACT FOR THEIR FULL CIRCUMFERENCE TO PRECLUDE THE COVER FROM ROCKING IN THE FRAME.
5. THE MANHOLE FRAME AND COVER SHALL BE MARKED WITH LETTERING INDICATING THE NAME OF THE MANUFACTURER AND THE YEAR WHEN THE COVER OR FRAME WAS CAST. THE COVER SHALL BE FURTHER IDENTIFIED WITH REGARDS TO OWNERSHIP USING LETTERS AT LEAST 1 INCH IN HEIGHT. THIS IDENTIFICATION SHALL BE "CITY OF WICHITA SEWER DEPARTMENT". THE WORD DEPARTMENT MAY BE ABBREVIATED. THE TEXTURE OF THE TOP SURFACE OF THE COVER SHALL BE MANUFACTURED IN A CHECKERED PATTERN DESIGN AS INDICATED ON THE DRAWINGS. SMOOTH BLOCKOUTS SHALL BE UTILIZED TO HIGHLIGHT THE LETTERING ON THE COVER SURFACE. THE TOTAL AREA OF SMOOTH SURFACE BLOCKOUT SHALL NOT EXCEED THE AREA AS INDICATED ON THE DRAWING. POSITIONING OF SMOOTH BLOCKOUTS AND LETTERING MAY VARY FROM THAT SHOWN ON THE DETAILED DRAWING.

THE CITY OF WICHITA

CITY ENGINEER'S OFFICE
CITY HALL - SEVENTH FLOOR
455 NORTH MAIN STREET
WICHITA, KANSAS 67202
(316) 265-6501
(316) 268-9117 FAX

MANHOLE FRAME AND COVER

M. E. LINDEBAK P.E. - CITY ENGINEER

PROJECT NUMBER	INDEX CODE
468-82592	743724
DATE: MAR 96	SHEET 8 OF 9

VERTICAL RISER DETAILS

ADOPTED AS STANDARD DESIGN
BY
CITY OF WICHITA, KANSAS
OCTOBER 1992

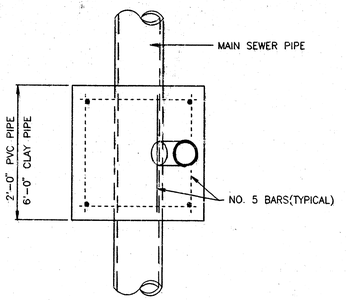

TYPICAL PLAN VIEW

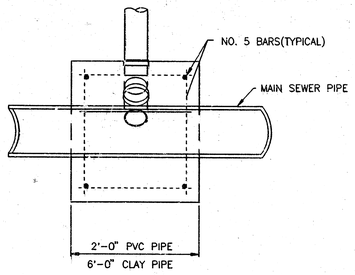

TYPICAL SECTION X-X

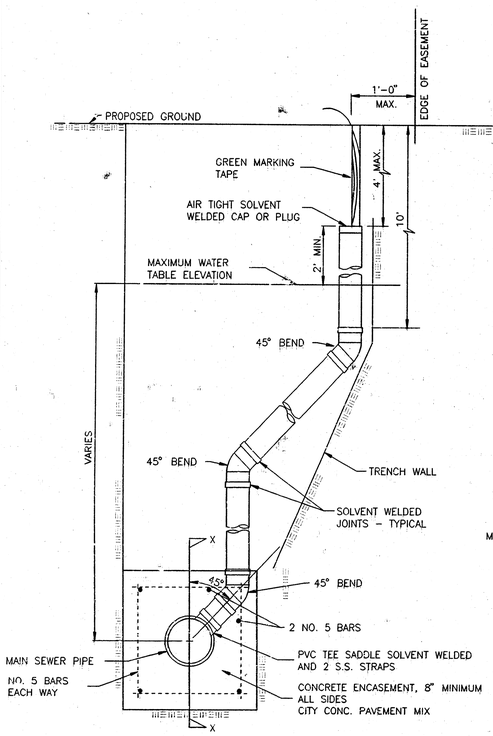

METHOD "A"

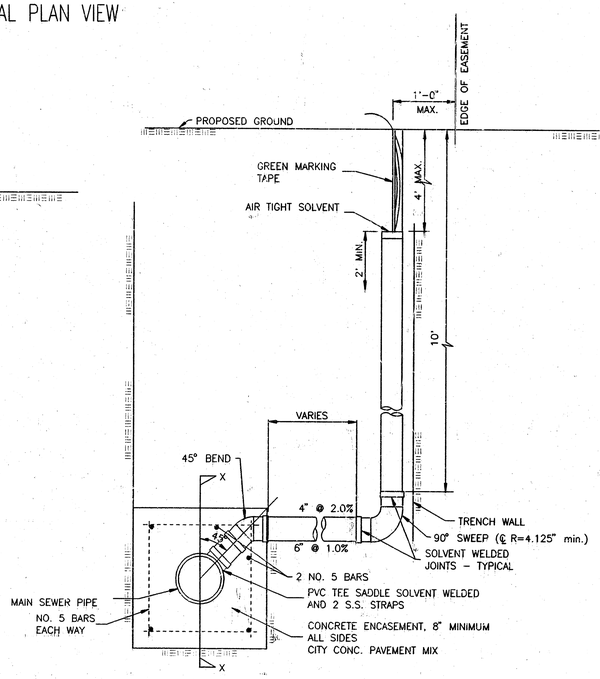

METHOD "B"

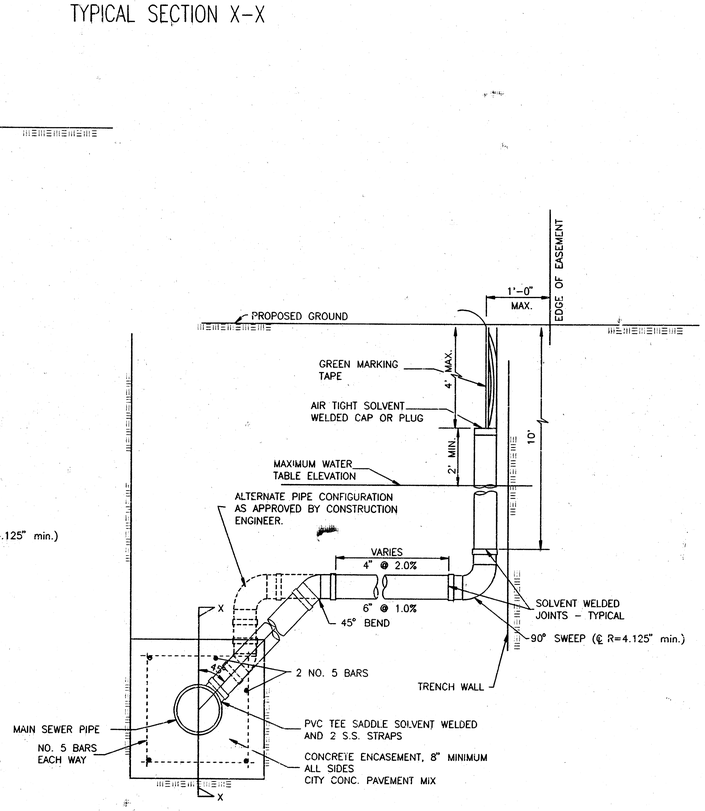

METHOD "C"

NOTE: RISER PIPE REQUIREMENTS AT MANHOLE STUBS SHALL BE SIMILAR TO THOSE SHOWN ABOVE.

GENERAL NOTES

1. RISERS. Risers shall be installed to serve all lots or tracts where the sanitary sewer main is below the water table. Risers shall also be installed to serve all lots and tracts where the sanitary sewer main depth is greater than 12 feet below the proposed ground elevation. Installation of risers because of field conditions shall be as approved by the Construction Engineer. The location of the risers to serve developed property shall be approved by the property owner and the Construction Engineer.

2. PIPE STUBS. Pipe stubs shall be installed in manholes where locations of manholes will provide satisfactory service connection as determined by the Construction Engineer. The vertical distance between the flowline of the manhole pipe stub and the flowline of the sanitary sewer main out of the manhole shall not exceed 2 feet. Risers shall be utilized at manhole pipe stubs as indicated in Note 1. Manhole pipe stubs shall be set such that the top of the stub is not lower than the top of the sanitary sewer main.

3. SIZING. Pipe stubs and risers shall be sized according to the plans and riser table where risers are indicated by the plans. Where risers or pipe stubs are required because of field conditions, the risers and stubs shall be six-inch diameter for commercial or industrial properties and 4" or 6" diameter for residential properties, based on lot size and sanitary sewer main depth. Sizing of risers and stubs shall be approved by the Construction Engineer prior to installation.

4. RISER OR STUB MATERIAL. Risers and stubs shall be constructed of Schedule 40 PVC Pipe meeting the requirements of the latest revision of A.S.T.M. All pipe joints shall be solvent welded.

5. REINFORCED CONCRETE ENCASEMENT. Riser connections to clay pipe sanitary sewers shall be reinforced concrete encased both ways from the riser centerline. The reinforced concrete encasement shall extend three feet from the riser centerline or stop at the first sanitary sewer pipe joint within three feet of the riser centerline. Riser connections to PVC Sanitary Sewer mains shall be reinforced concrete encased one foot each way from the riser centerline. The concrete encasement shall be reinforced using reinforcing steel as shown in the appropriate drawing. The concrete shall conform to the City Standard Specifications for concrete pavement.

6. BEDDING. Bedding around the sanitary sewer riser shall be compacted Pipe Bedding Type 1 or 2. The bedding shall be placed and compacted from the depth of the sanitary sewer main to the top of the sanitary sewer riser pipe. Compacted Pipe Bedding Type 1 or 2 shall be required for all risers whether constructed in vertical wall or sloped wall trenches. Bedding material and construction practices shall be approved by the Construction Engineer prior to installation.

7. SUPPORT OF RISERS. Sanitary sewer riser pipe shall be supported during trench backfill. The riser pipe shall be held in a vertical position at all times until trench backfill and compaction has been completed. Contractor's methods for supporting and backfilling the riser pipe shall be approved by the Construction Engineer.

8. PLUGGING. The ends of the riser pipes and manhole stubs shall be plugged using an airtight solvent welded cap or plug. Cap or plug fittings shall be approved by the Construction Engineer prior to installation. Caps or plugs which do not provide an airtight seal will not be accepted.

9. TOP OF THE RISER PIPE. The top elevation of the sanitary sewer riser pipe shall be built per plan elevations, unless otherwise directed by the Construction Engineer. Where riser elevations are not shown on the plans, the top of the risers shall be set at an elevation four feet below the proposed ground surface. If ground water is encountered, the top of the riser pipe shall be set at an elevation two feet (min.) above the maximum water table elevation, regardless of the riser elevation shown on the plans.

10. MARKING. Locations of the ends of the sanitary sewer riser pipe shall be marked by fastening green colored plastic tape to the end of the riser. The tape shall be supported by a length of wooden 2 x 4, extending from the top of the riser pipe to the proposed ground surface. The green tape shall be visible and extend one foot above the proposed ground surface. The green tape shall be 4 mil Polyethylene film with a minimum width of three inches, specifically manufactured for the purpose of identification of underground sewers.

11. LOCATION MEASURES. The project inspector shall record and document the location of all risers constructed as measured from the nearest manhole, indicating the direction from the manhole, the direction and distance from the main, riser size, and elevation of the top of the riser.

12. RISER LOCATION. The riser shall be located per plan if shown. If not shown on the plan, the riser shall be located at the center of the lot, within one foot of the property side of the easement for the lot being served. All riser locations shall be approved by the Construction Engineer prior to installation.

13. PAYMENT. "Sanitary sewer risers" shall be paid for at the contract unit price per each, which price shall be full compensation for all pipe, fittings, marking tape, length of wooden 2 x 4, reinforced concrete encasement, support during backfill, backfill, labor, site restoration, and any other items necessary to complete the work.

"Manhole stubs" shall be paid for at the contract unit price per each, which shall be full compensation for all labor, material, and incidentals necessary to complete the work including all pipe, fittings, reinforced concrete encasement, and all other items as required and listed for "Sanitary Sewer Risers".

REVISED NOTE 4 - APRIL 98

THE CITY OF WICHITA

CITY ENGINEER'S OFFICE
CITY HALL - SEVENTH FLOOR
455 NORTH MAIN STREET
WICHITA, KANSAS 67202
(316) 268-4501
(316) 268-4174 FAX

VERTICAL RISER DETAIL

M. E. LINDEBAK P.E. - CITY ENGINEER

PROJECT NUMBER	INDEX CODE
468-82592	743724
DATE: MAR 96	SHEET 9 OF 9

18-05-03-11