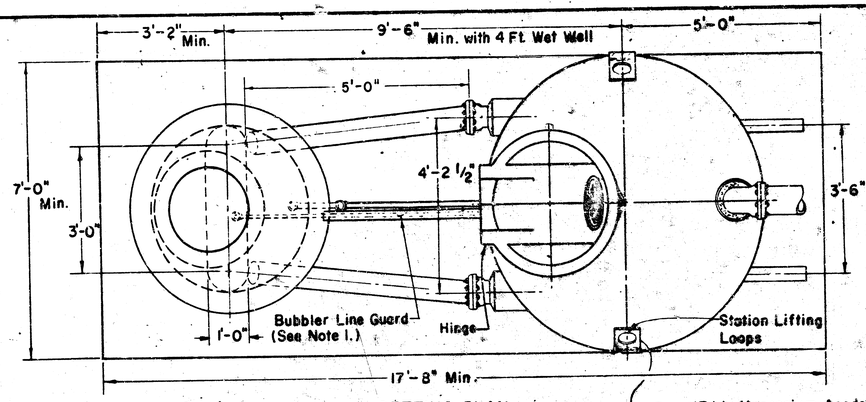

SETTING PLAN

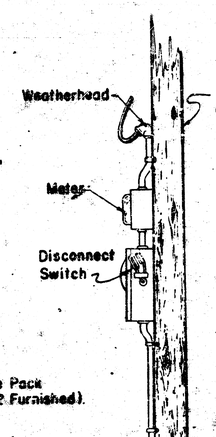

17 Lb. Magnesium Anode Pack One Installed Ea. Side (2 Furnished).

Notes:-

1. Bubbler Line Guard (∠-3" x 3" x 5Ft. Long) Furnished by S & L and Cut to Req'd. Length at Installation.
2. See Engineer's Plans & Specifications for Details of Wet Well, Concrete Foundation, Grout Under Station and Electrical Service. Sheet no. 3
3. The 2' conc. slab around entrance tube to be included in bid price of Lift station.

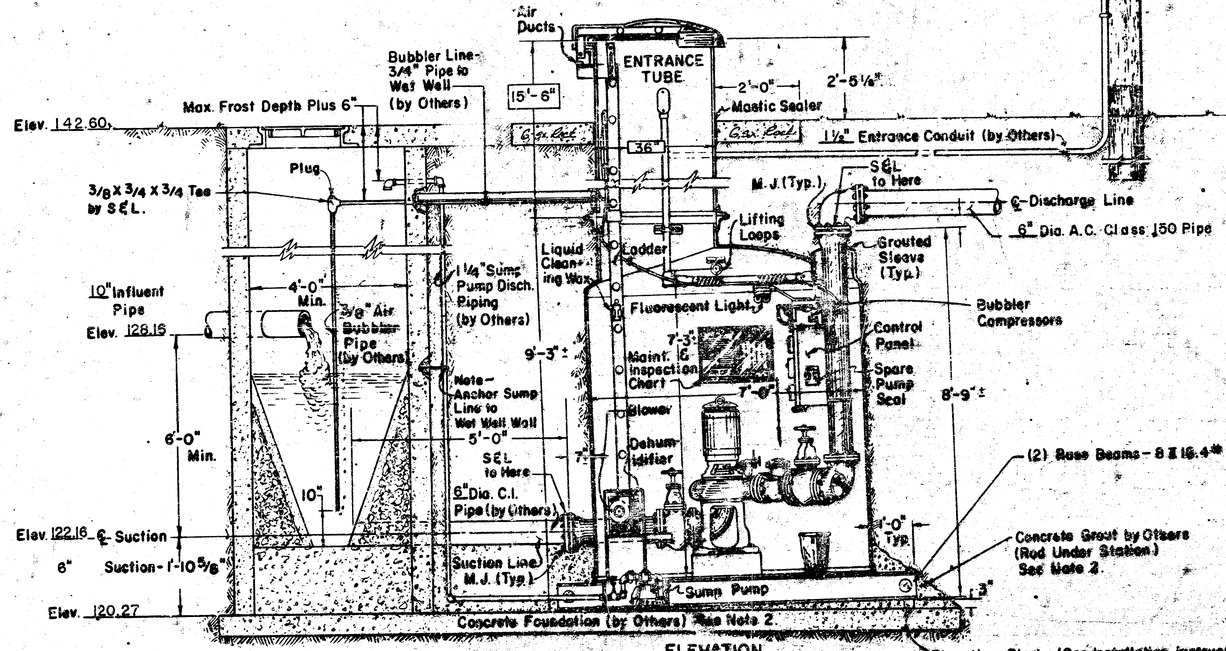

TYPICAL WET WELL (by Others)
See Note 2

ELEVATION (CROSS SECTION)

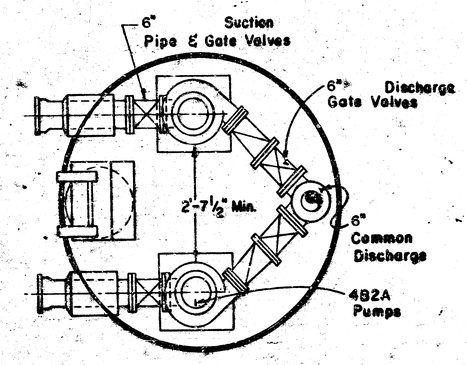

STATION PLAN
IN CONNECTION WITH
LAT. 7, SOUTHWEST MAIN
FLOYD BAILEY ADDITION
PRIVATE PROJECT

DWG. NO. 75 D 1

Smith & Loudoun
DIVISION-UNION TANK CAR COMPANY

FACTORY-BUILT UNDERGROUND DUPLEX SEWAGE PUMPING STATION
7'-0 DIAMETER-36" ENT. TUBE

SECTION 600