GENERAL NOTES

1. THE CONTRACTOR SHALL BE RESPONSIBLE FOR PRESERVING PROPERTY IRONS. THE CONTRACTOR WILL BE REQUIRED TO RE-ESTABLISH ANY PROPERTY IRONS WHICH ARE DAMAGED OR DESTROYED BY HIS CONSTRUCTION OPERATIONS. SUCH IRONS SHALL BE RE-ESTABLISHED BY A LICENSED LAND SURVEYOR IN ACCORDANCE WITH STATE LAWS.

2. EXISTING UTILITIES AND THEIR LOCATIONS AS SHOWN ON THE PLANS REPRESENT THE BEST INFORMATION OBTAINABLE FOR DESIGN. LOCATION INFORMATION HAS BEEN OBTAINED FROM THE VARIOUS UTILITY COMPANIES AND IS EITHER FROM COMPANY RECORD DRAWINGS OR COMPANY PROVIDED FIELD LOCATIONS. THE PLAN LOCATIONS SHOWN ARE NOT GUARANTEED. ADDITIONAL EXISTING UTILITIES MAY ALSO BE ENCOUNTERED.

3. CONTRACTOR WILL BE REQUIRED TO PROVIDE A MINIMUM ADVANCE NOTICE OF FORTY-EIGHT (48) HOURS TO UTILITY COMPANIES PRIOR TO STARTING ANY EXCAVATION AS FOLLOWS:

   KANSAS ONE-CALL 1-800-344-7233
   or 687-2470 (LOCAL WICHITA)

   THE CONTRACTOR MUST NOTIFY THE FOLLOWING IN CASE OF AN EMERGENCY:

SOUTHWESTERN BELL TELEPHONE COMPANY	1-571-2115
CABLEVISION	262-4270 OR 263-2061
K. P. & L. GAS SERVICE COMPANY	263-7511
KANSAS GAS & ELECTRIC	264-1141
CITY OF BEL AIRE	744-2451
ARKLA GAS COMPANY	942-8350 OR 263-8161

4. RUBBLE FROM THE REMOVAL OF MISCELLANEOUS STRUCTURES AND EXCESS EXCAVATION WHICH IS TO BE WASTED SHALL BE DISPOSED OF ON SITES TO BE PROVIDED BY THE CONTRACTOR. THESE SITES SHALL BE APPROVED BY THE ENGINEER AS TO SUITABILITY, APPEARANCE AND SITE LOCATION. LOCATIONS THAT, IN THE OPINION OF THE ENGINEER WILL LEAVE AN UNSIGHTLY APPEARANCE WILL NOT BE APPROVED. ALL DISPOSAL SITES MUST BE APPROVED BY THE KANSAS DEPARTMENT OF HEALTH AND ENVIRONMENT. MATERIAL EITHER STOCKPILED OR DISPOSED OF IN A FLOOD PLAIN WOULD REQUIRE A KANSAS STATE BOARD OF AGRICULTURE PERMIT. ANY MATERIAL DUMPED IN WATERS OF THE UNITED STATES OR WETLANDS IS SUBJECT TO U.S. CORPS OF ENGINEERS PERMITTING REGULATIONS. ANY MATERIAL BURIED OR STOCKPILED BEYOND APPROVED CONSTRUCTION LIMITS WOULD REQUIRE ADDITIONAL ARCHEOLOGICAL INVESTIGATIONS UNLESS BURIED IN A PREVIOUSLY APPROVED BORROW LOCATIONS.

5. COST OF EXCAVATION, HAULING, AND DUMPING OF EXCESS EXCAVATION SHALL BE SUBSIDIARY TO THE PROJECT.

6. A PORTION OF EXCESS EXCAVATED MATERIAL SHALL BE MOUNDED AROUND MANHOLES WHICH EXTEND MORE THAN ONE (1) FOOT ABOVE THE EXISTING GROUND. SUCH MOUNDS SHALL BE CONSTRUCTED WITH A SIX (6) FOOT DIAMETER FLAT TOP WITH 4 TO 1 SIDE SLOPES DOWN TO THE ORIGINAL GROUND. THE ELEVATION OF THE FLAT TOP OF THE MOUND SHALL BE 0.4 FOOT BELOW THE TOP OF THE MANHOLE.

7. ALL STUBS AND PLUGGED PIPES SHALL BE LOCATED WITH GREEN PLASTIC TAPE IN THE SAME MANNER AS RISERS.

8. PRIOR TO LAYING SEWER LINES USING EXISTING STUBS IN EXISTING MANHOLES, THE CONTRACTOR SHALL EXPOSE AND VERIFY THE ELEVATION, GRADE AND ALIGNMENT OF EXISTING STUBS AND NOTIFY THE ENGINEER OF ANY DEVIATION FROM THE PLAN. WHERE CONNECTION TO AN EXISTING MANHOLE THAT DOES NOT HAVE AN EXISTING STUB OR THE STUB IS UNUSABLE DUE TO ELEVATION GRADE OR ALIGNMENT, THE CONTRACTOR SHALL RESHAPE THE EXISTING MANHOLE INVERT TO PROVIDE SMOOTH FLOW. THE COST OF RE-SHAPING EXISTING MANHOLE INVERTS IS INCIDENTAL TO THE PROJECT.

9. TREES AND SHRUBS IN PUBLIC RIGHT-OF-WAY WHICH ARE IN DIRECT CONFLICT WITH PROPOSED NEW CONSTRUCTION SHALL BE REMOVED BY THE CONTRACTOR WITH THE ENGINEER'S APPROVAL. TREES AND SHRUBS WHICH ARE NOT IN DIRECT CONFLICT WITH PROPOSED NEW CONSTRUCTION SHALL BE SAVED AND PROTECTED FROM DAMAGE. COST OF REMOVAL SHALL BE PAID AS SITE PREPARATION AND RESTORATION.

10. ALL DISTURBED AREAS WILL BE SEEDED IN CONFORMANCE WITH CITY OF BEL AIRE SPECIFICATIONS, EXCEPT RYE GRASS MAY BE SUBSTITUTED FOR FESCUE. SEEDING COST IS CONSIDERED TO BE INCLUDED IN THE BID OF CLEARING AND RESTORATION.

11. TREES TO BE REMOVED ARE MARKED ⊗ ALL TREES WHICH IN THE OPINION OF THE FIELD ENGINEER CAN BE SAVED, SHALL BE SAVED. REMOVAL OF TREES SHALL BE CONSIDERED AS SUBSIDIARY TO SITE CLEARING & RESTORATION.

BENCHMARK

BM#1 "□" CUT ON SW CORNER OF CURB INLET ON NW CORNER OF 45TH. ST. NORTH AND HEDGEROW 10' EAST AND 1' NORTH OF SE CORNER OF BEL AIRE HEIGHTS GARDEN HOMES PLAT.
ELEV.=1409.12

BM#2 "□" CUT ON TOP OF CURB S. SIDE OF HEDGEROW STREET AT P.T. OF CURVE.
ELEV.=1428.22

PRIVATE SANITARY SEWER PLANS TO SERVE
BEL AIRE HEIGHTS GARDEN HOME ADDITION

AN ADDITION TO
CITY OF BEL AIRE
SEDGWICK COUNTY, KANSAS
JANUARY 2000

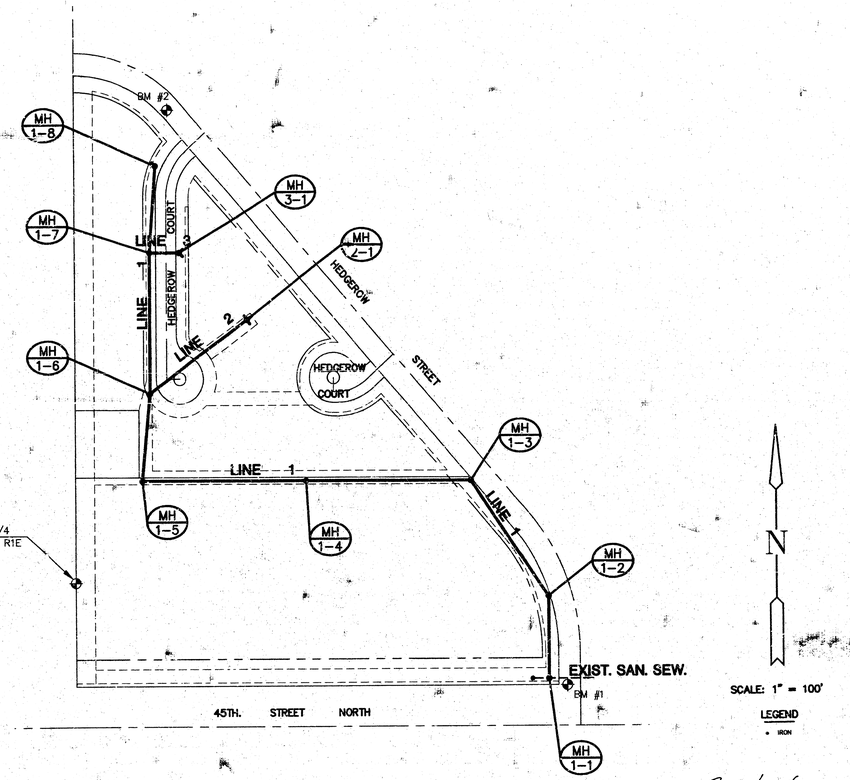

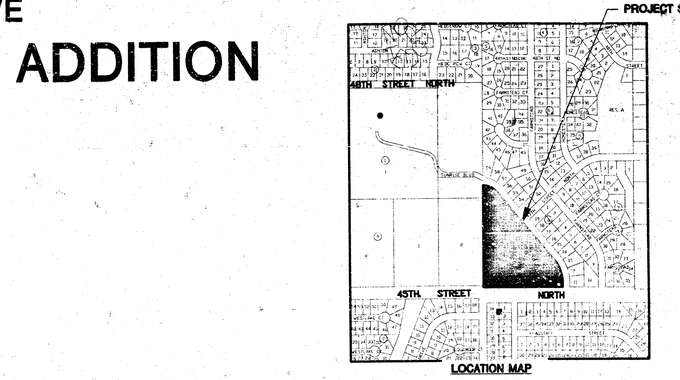

LOCATION MAP

SCALE: 1" = 100'

LEGEND
• IRON

INDEX TO DRAWINGS

SHEET NO.	DESCRIPTION
1	TITLE SHEET
2	MANHOLE DETAILS
3	LINE 1 PLAN & PROFILE
4	LINE 1, 2 & 3 PLAN & PROFILE
5	FINAL PLAT

APPROVED AS NOTED
BY CITY ENGINEER OF WICHITA

Sanitary Sewers_____

Storm Sewers_____

Driveway Approaches_____

Water Mains_____

Paving_____

NOTE TO CONTRACTOR

INSPECTION AND TESTING FOR THIS PROJECT IS TO BE PROVIDED BY A LICENSED CONSULTING ENGINEERING FIRM UNDER CONTRACT WITH OWNER/DEVELOPER. SAID INSPECTION TO BE IN ACCORDANCE WITH THE CITY OF WICHITA STANDARD CONSTRUCTION ENGINEERING PRACTICES AND CERTIFIED BY A LICENSED PROFESSIONAL ENGINEER. NO WORK SHALL BE PERFORMED IN DEDICATED EASEMENTS OR THE PUBLIC RIGHT-OF-WAY BY THE CONTRACTOR WITHOUT SUCH INSPECTION NOR SHALL ANY WORK BE COMMENCED IN DEDICATED EASEMENTS OR PUBLIC RIGHT-OF-WAY WITHOUT WRITTEN AUTHORIZATION BY THE CITY ENGINEER.

Booked
P-129
5-25-00
R. Loomis

AS BUILT 3/00

CITY OF WICHITA PRIVATE
PROJECT NO. 977PPS(607861)

MID-KANSAS ENGINEERING
CONSULTANTS, INC.
411 N. WEBB ROAD
WICHITA, KS. 67206
316-684-9600

BEL AIRE HEIGHTS
GARDEN HOME ADDITION
PROJECT NAME

SANITARY SEWER PLANS
SHEET TITLE

GJA/JTC	DM	GJA/JTC
DESIGN BY:	DRAWN BY:	CHECKED BY:
JANUARY 2000	99176BT	1 / 5
DATE	JOB NO.	SHEET/OF

A:\BELAIRE\99176SA\99176BT.DWG Fri Mar 17 08:55:17 2000

SEWER APPURTENANCES DETAILS

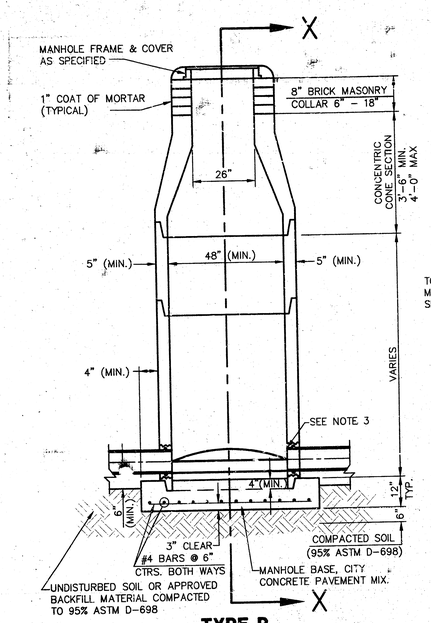

TYPE P
STANDARD MANHOLE

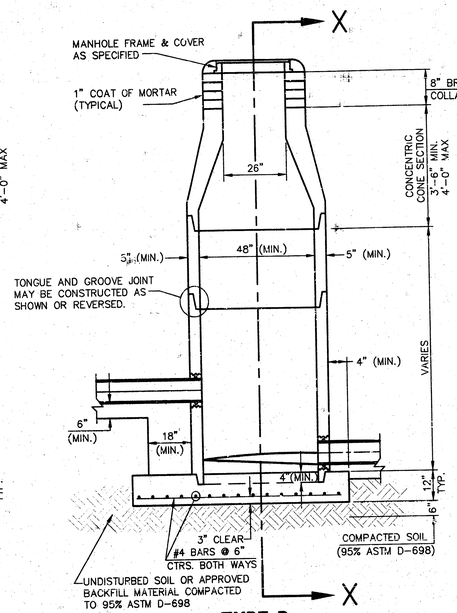

TYPE P
INSIDE DROP MANHOLE

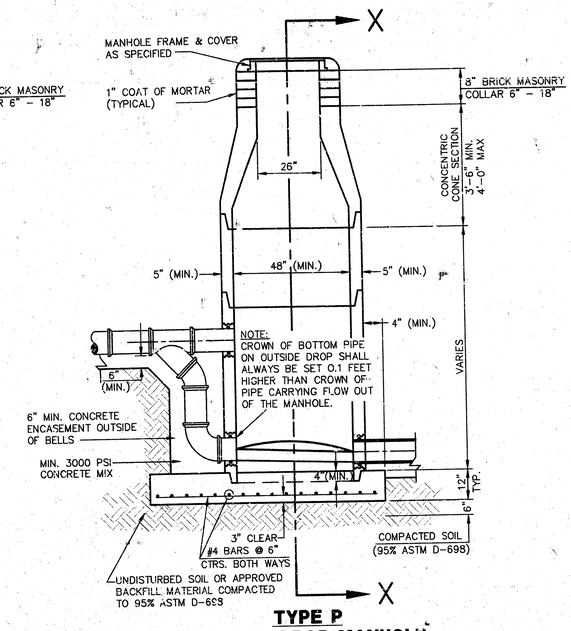

TYPE P
OUTSIDE DROP MANHOLE

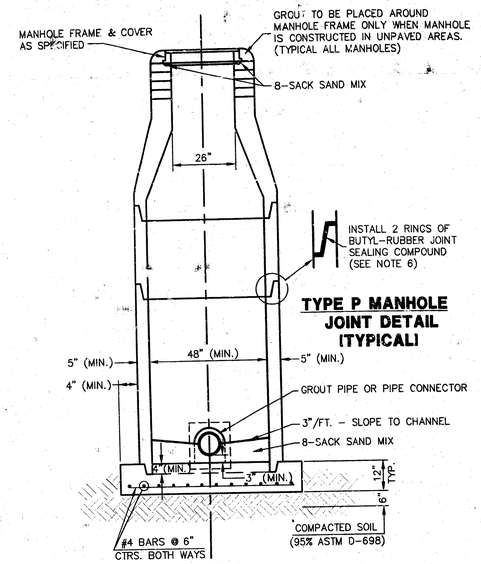

TYPE P MANHOLE JOINT DETAIL (TYPICAL)

SECTION X (TYPICAL)

GENERAL NOTES - PRECAST MANHOLE NOTES

1. ALL PRECAST CONCRETE MANHOLE SECTIONS SHALL CONFORM TO THE LATEST REVISIONS OF A.S.T.M. C478 AS MODIFIED BY THE SPECIFICATIONS.
2. NON-SHRINK GROUT SHALL BE NON-METALLIC TYPE.
3. APPROVED FLEXIBLE WATERSTOP GASKETS SHALL BE INSTALLED TO JOIN THE SEWER TO THE MANHOLE WALL WHEN A.B.S. COMPOSITE PIPE OR P.V.C. PIPE IS USED. FOR OTHER TYPES OF PIPE THE SEWER SHALL BE GROUTED IN PLACE WITH NON-SHRINK GROUT. THE SEWER PIPE SHALL BE SUPPORTED WITH CONCRETE ENCASEMENT A MINIMUM OF 3 FEET FROM THE MANHOLE WALL AND TO THE FIRST JOINT FOR V.C.P. SUCH THAT THE JOINT REMAINS FLEXIBLE.
4. ALL INSIDE SURFACES OF THE CONCRETE MANHOLE WHICH WOULD BE EXPOSED TO SEWER GAS SHALL BE COATED WITH 2 COATS TNEMEC SERIES 66 HI-BUILD EPOXOLINE, DRY THICKNESS OF 8 MILS (MIN.)
5. EXTERIOR MANHOLE WALLS SHALL BE COATED WITH 1 COAT MOBILARMA 633 BITUMINOUS COATING.
6. JOINT SEALING COMPOUND SHALL BE KENT SEAL NO. 2 OR APPROVED EQUAL.
7. PRECAST MANHOLES SHALL BE SET AT LEAST 4 INCHES INTO THE MANHOLE BASE.
8. TOP OF MANHOLE FLOOR SLAB SHALL BE AT LEAST 3 INCHES BELOW THE FLOW LINE OF THE OUTLET PIPE TO INSURE SUFFICIENT MINIMUM THICKNESS OF SHAPED INVERT.
9. LIFTING HOLES SHALL BE FILLED WITH NON-SHRINK GROUT AND THE INTERIOR SURFACE COATED AS SPECIFIED.
10. MORTAR USED IN MASONRY CONSTRUCTION SHALL CONTAIN 8 SACKS OF CEMENT PER CUBIC YARD. CONCRETE USED IN MANHOLE BASES SHALL CONFORM TO THE REQUIREMENTS OF CONCRETE FOR CONCRETE PAVEMENT CONSTRUCTION AS SPECIFIED IN THE CITY STANDARD PAVING SPECIFICATIONS USING CITY CONCRETE PAVEMENT MIX WITHOUT AIR ENTRAINING ADMIXTURE. MORTAR SHALL BE PLACED AROUND THE MANHOLE RING AS SHOWN ON THE DRAWINGS WHEN MANHOLES ARE CONSTRUCTED IN UNPAVED AREAS. MANHOLES CONSTRUCTED WHERE PIPE SIZES ARE SMALLER THAN 24" SHALL HAVE AN INSIDE DIAMETER OF 4'. MANHOLES CONSTRUCTED WHERE PIPE SIZES ARE 24" OR LARGER SHALL HAVE AN INSIDE DIAMETER OF 5'. COMPLETED MANHOLE SHALL BE WITHOUT LEAKS AND WATER TIGHT.
11. REINFORCING STEEL SHALL BE INSTALLED IN THE MANHOLE BASES AND SHALL CONSIST OF NO. 4 BARS PLACED ON 6" CENTERS IN BOTH DIRECTIONS. THE MANHOLE BASE REINFORCEMENT SHALL BE PLACED AT LEAST 3" ABOVE THE BOTTOM OF THE MANHOLE BASE. ALL COSTS FOR FURNISHING AND INSTALLING REINFORCING STEEL SHALL BE INCLUDED IN THE UNIT PRICE BID FOR THE MANHOLE.
12. OPENINGS SHALL BE CUT INTO THE MANHOLE WALL WHEN OUTSIDE DROPS ARE CONSTRUCTED ON EXISTING MANHOLES. SUCH OPENINGS CUT INTO EXISTING MANHOLES SHALL BE AS SMALL AS PRACTICAL TO FACILITATE INSTALLING AND GROUTING THE NEW PIPE IN PLACE. WATERSTOP GASKETS SHALL BE USED WITH P.V.C. AND A.B.S. COMPOSITE PIPE. THE NEW PIPE SHALL BE GROUTED INTO THE OPENING USING AN APPROVED NON-SHRINK GROUT FOR THE FULL MANHOLE WALL THICKNESS. THE EXTERIOR OF THE COMPLETED CONNECTION SHALL BE SEALED WITH AN APPROVED BITUMINOUS COATING SUCH THAT THE CONNECTION WILL BE WATER TIGHT. FLOOR OF MANHOLE SHALL BE MODIFIED TO FORM NEW FLOW CHANNEL FOR THE NEW CONNECTION AS INDICATED BY THE DRAWING. THIS WORK, INCLUDING MODIFICATION OF MANHOLE FLOOR, SHALL BE PAID FOR AT THE UNIT PRICE BID FOR OUTSIDE DROP STACK CONSTRUCTED ON EXISTING MANHOLE.
13. THE FLOORS OF ALL MANHOLES SHALL BE SHAPED WITH FLOW CHANNELS SUCH THAT THE MANHOLES WILL BE SELF CLEANING AND FREE OF AREAS WHERE SOLIDS COULD BE DEPOSITED AS SEWAGE FLOWS THROUGH THE MANHOLE FROM ALL INLET PIPES TO THE OUTLET PIPE. FLOW CHANNELS SHALL BE FORMED TO MATCH THE BOTTOM HALVES OF THE INFLOWING PIPES AND THE OUTFLOWING PIPE AS SHOWN BY THE DRAWINGS EXCEPT FOR INSIDE DROP MANHOLES. FLOW CHANNELS FOR INSIDE DROP MANHOLES SHALL BE CONSTRUCTED AS INDICATED BY THE DRAWING. MANHOLE FLOORS SHALL HAVE SLOPES OF 3 INCHES PER FOOT IN THE AREAS OUTSIDE OF THE FLOW CHANNELS SLOPED TOWARD THE FLOW CHANNELS. PIPES LAID THROUGH MANHOLES SHALL HAVE THE TOP HALF REMOVED TO NEAT LINES FOR THE FULL INSIDE DIAMETER OF THE MANHOLE. MANHOLE FLOORS SHALL THEN BE SHAPED AROUND THE BOTTOM HALF OF THE PIPE WHICH FORMS THE FLOW CHANNEL.
14. PIPES INSTALLED WITHIN THE EXCAVATION MADE FOR THE MANHOLE SHALL BE CRADLED WITH CONCRETE TO THE LIMITS OF THE MANHOLE EXCAVATION. WHEN CLAY PIPE IS USED, THE CRADLE SHALL EXTEND TO THE FIRST JOINT OUTSIDE THE MAHOLE. THE CRADLE SHALL BE TERMINATED AT THE CLAY PIPE JOINT IN A MANNER WHICH WILL MAINTAIN THE FLEXIBILITY OF THE JOINT. COST OF CRADLE WITHIN MANHOLE EXCAVATION OR TO CLAY PIPE JOINTS ADJACENT TO MANHOLE SHALL BE INCLUDED IN THE UNIT PRICE BID FOR THE MANHOLE.
15. MANHOLE COVER CASTINGS AND MANHOLE FRAME CASTINGS SHALL CONFORM TO THE REQUIREMENTS AS INDICATED IN THE STANDARD SPECIFICATIONS AND AS SHOWN IN THE STANDARD DETAIL DRAWING.
16. THE VERTICAL DROP IN INSIDE DROP MANHOLES SHALL NOT EXCEED 2' FOR INFLOWING PIPES SIZED 12" OR SMALLER AND 2' FOR INFLOWING PIPES LARGER THAN 12". THE CROWNS OF INFLOWING PIPES SHALL NEVER BE SET LOWER THAN THE CROWN OF THE OUTFLOWING PIPE.
17. STANDARD MANHOLES AND STANDARD INSIDE DROP MANHOLES SHALL BE BID AS STANDARD MANHOLES FOR THE TYPE AND DIAMETER INDICATED. OUTSIDE DROP MANHOLES SHALL BE BID AS STANDARD OUTSIDE DROP MANHOLES FOR THE TYPE AND DIAMETER INDICATED. ALL MANHOLE DIAMETERS WILL BE 4' UNLESS INDICATED OTHERWISE.
18. A BRICK MASONRY COLLAR SHALL BE INSTALLED BETWEEN THE CAST IRON FRAME AND THE CONCENTRIC CONE. THE COLLAR WILL HAVE 8" WALLS AND A VERTICAL HEIGHT OF 6" MINIMUM AND 18" MAXIMUM. A 1" COAT OF MORTAR WILL BE PLASTERED ON THE OUTSIDE OF THE COLLAR. THE USE OF PRE-CAST CONCRETE SPACERS FOR MANHOLE TOP ADJUSTMENT IS ALSO ALLOWED.

THE CITY OF WICHITA

CITY ENGINEER'S OFFICE
CITY HALL - SEVENTH FLOOR
455 NORTH MAIN STREET
WICHITA, KANSAS 67202
(316) 268-4501
(316) 268-4114 FAX

STANDARD TYPE 'P' MANHOLES

M. E. LINDEBAK P.E. – CITY ENGINEER

PROJECT NUMBER	OC #
977 PPS	607861
DATE	SHEET 2 OF 5
MAR 96	

L:\BUILTS\98176BD.DWG Fri Mar 17 08:52:08 2000
L:\BUILTS\98176BD.DWG

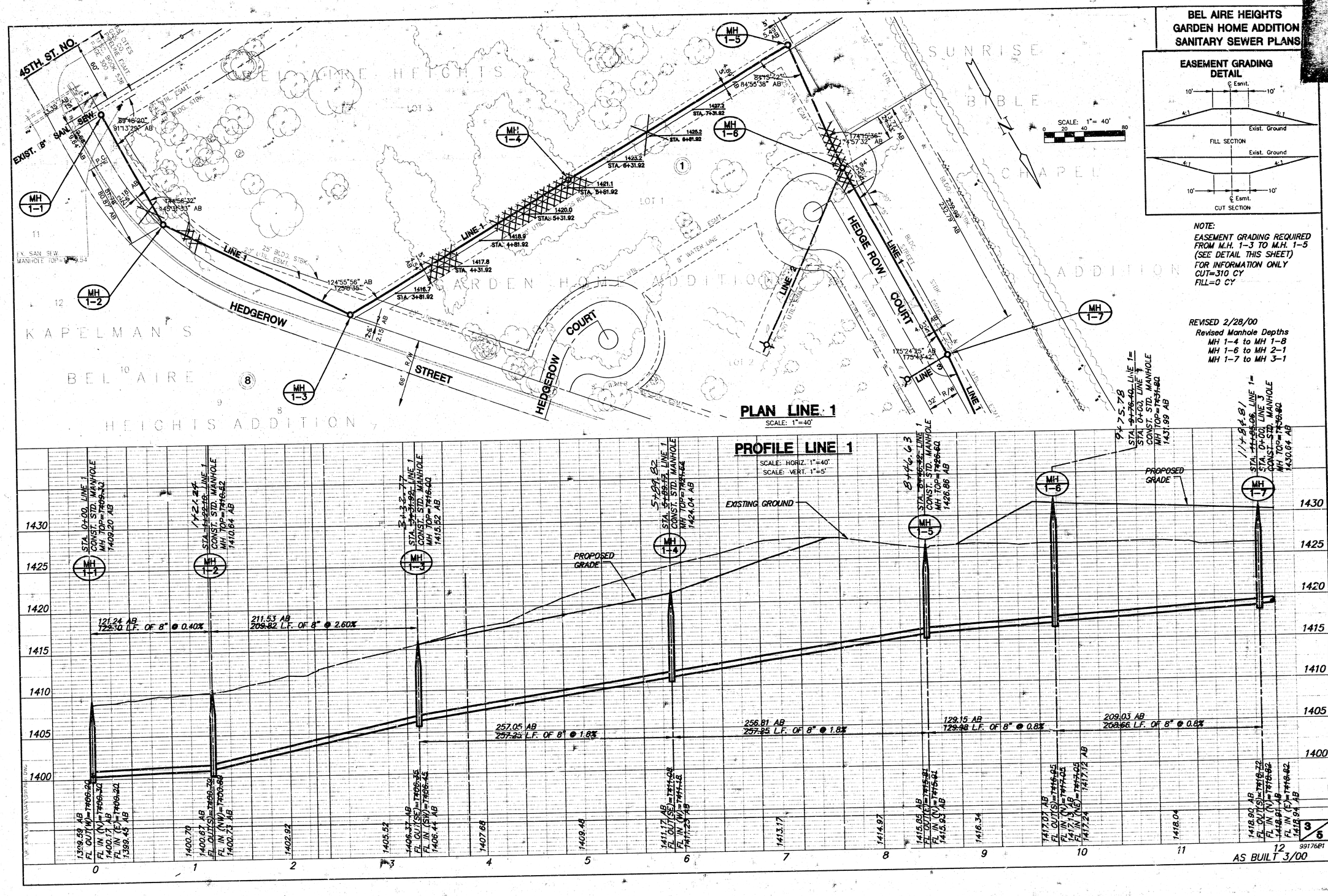
BEL AIRE HEIGHTS
GARDEN HOME ADDITION
SANITARY SEWER PLANS
EASEMENT GRADING DETAIL
FILL SECTION
CUT SECTION
NOTE:
EASEMENT GRADING REQUIRED FROM M.H. 1-3 TO M.H. 1-5 (SEE DETAIL THIS SHEET)
FOR INFORMATION ONLY
CUT=310 CY
FILL=0 CY
REVISED 2/28/00
Revised Manhole Depths
MH 1-4 to MH 1-8
MH 1-6 to MH 2-1
MH 1-7 to MH 3-1
PLAN LINE 1
SCALE: 1"=40'
PROFILE LINE 1
SCALE: HORIZ. 1"=40'
SCALE: VERT. 1"=5'
45TH. ST. NO.
EXIST. 8" SAN. SEW.
HEDGEROW STREET
HEDGEROW COURT
HEDGE ROW COURT
KAPELMAN'S BEL AIRE HEIGHTS ADDITION
SUNRISE BIBLE CHAPEL ADDITION
EXISTING GROUND
PROPOSED GRADE
121.24 AB
122.10 L.F. OF 8" @ 0.40%
211.53 AB
209.82 L.F. OF 8" @ 2.60%
257.05 AB
257.25 L.F. OF 8" @ 1.8%
256.81 AB
257.25 L.F. OF 8" @ 1.8%
129.15 AB
129.98 L.F. OF 8" @ 0.8%
209.03 AB
208.66 L.F. OF 8" @ 0.8%
AS BUILT 3/00
99176B1

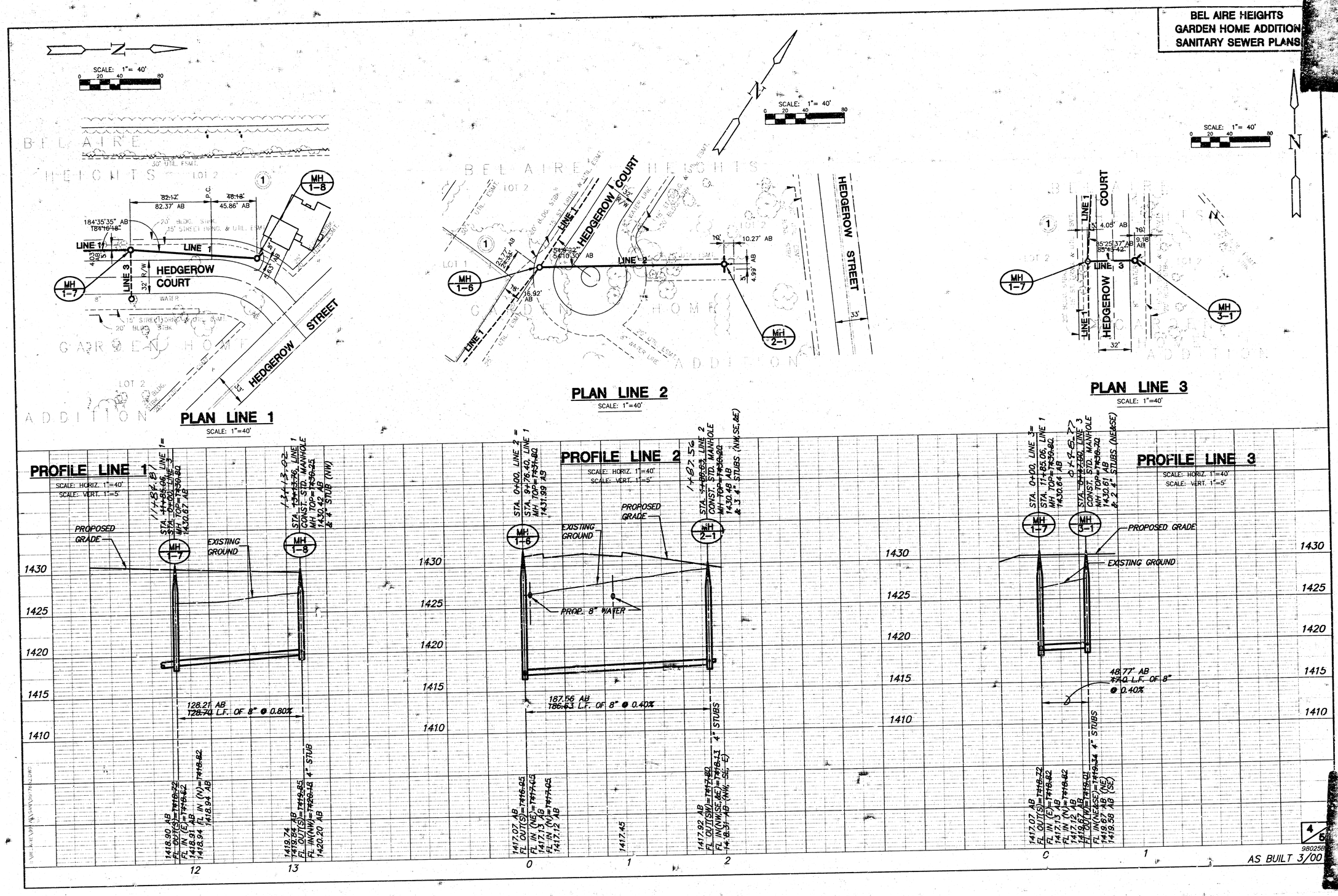
BEL AIRE HEIGHTS
GARDEN HOME ADDITION
SANITARY SEWER PLANS
SCALE: 1"= 40'
PLAN LINE 1
SCALE: 1"=40'
PLAN LINE 2
SCALE: 1"=40'
PLAN LINE 3
SCALE: 1"=40'
HEDGEROW COURT
HEDGEROW STREET
LINE 1
LINE 2
LINE 3
MH 1-7
MH 1-8
MH 1-6
MH 2-1
MH 3-1
PROFILE LINE 1
SCALE: HORIZ. 1"=40'
SCALE: VERT. 1"=5'
PROFILE LINE 2
SCALE: HORIZ. 1"=40'
SCALE: VERT. 1"=5'
PROFILE LINE 3
SCALE: HORIZ. 1"=40'
SCALE: VERT. 1"=5'
PROPOSED GRADE
EXISTING GROUND
PROP. 8" WATER
128.21 AB
128.70 L.F. OF 8" @ 0.80%
187.56 AB
186.63 L.F. OF 8" @ 0.40%
48.77' AB
47.0 L.F. OF 8" @ 0.40%
AS BUILT 3/00
98025B

PRIVATE SANITARY SEWER PLANS TO SERVE

BEL AIRE HEIGHTS GARDEN HOME ADDITION

AN ADDITION TO
CITY OF BEL AIRE
SEDGWICK COUNTY, KANSAS
JANUARY 2000

GENERAL NOTES

1. THE CONTRACTOR SHALL BE RESPONSIBLE FOR PRESERVING PROPERTY IRONS. THE CONTRACTOR WILL BE REQUIRED TO RE-ESTABLISH ANY PROPERTY IRONS WHICH ARE DAMAGED OR DESTROYED BY HIS CONSTRUCTION OPERATIONS. SUCH IRONS SHALL BE RE-ESTABLISHED BY A LICENSED LAND SURVEYOR IN ACCORDANCE WITH STATE LAWS.

2. EXISTING UTILITIES AND THEIR LOCATIONS AS SHOWN ON THE PLANS REPRESENT THE BEST INFORMATION OBTAINABLE FOR DESIGN. LOCATION INFORMATION HAS BEEN OBTAINED FROM THE VARIOUS UTILITY COMPANIES AND IS EITHER FROM COMPANY RECORD DRAWINGS OR COMPANY PROVIDED FIELD LOCATIONS. THE PLAN LOCATIONS SHOWN ARE NOT GUARANTEED. ADDITIONAL EXISTING UTILITIES MAY ALSO BE ENCOUNTERED.

3. CONTRACTOR WILL BE REQUIRED TO PROVIDE A MINIMUM ADVANCE NOTICE OF FORTY-EIGHT (48) HOURS TO UTILITY COMPANIES PRIOR TO STARTING ANY EXCAVATION AS FOLLOWS:

   KANSAS ONE-CALL 1-800-344-7233 or 687-2470 (LOCAL WICHITA)

   THE CONTRACTOR MUST NOTIFY THE FOLLOWING IN CASE OF AN EMERGENCY:

SOUTHWESTERN BELL TELEPHONE COMPANY	1-571-2115
CABLEVISION	262-4270 OR 263-2061
K. P. & L. GAS SERVICE COMPANY	263-7511
KANSAS GAS & ELECTRIC	264-1141
CITY OF BEL AIRE	744-2451
ARKLA GAS COMPANY	942-8350 OR 263-8161

4. RUBBLE FROM THE REMOVAL OF MISCELLANEOUS STRUCTURES AND EXCESS EXCAVATION WHICH IS TO BE WASTED SHALL BE DISPOSED OF ON SITES TO BE PROVIDED BY THE CONTRACTOR. THESE SITES SHALL BE APPROVED BY THE ENGINEER AS TO SUITABILITY, APPEARANCE AND SITE LOCATION. LOCATIONS THAT, IN THE OPINION OF THE ENGINEER WILL LEAVE AN UNSIGHTLY APPEARANCE WILL NOT BE APPROVED. ALL DISPOSAL SITES MUST BE APPROVED BY THE KANSAS DEPARTMENT OF HEALTH AND ENVIRONMENT. MATERIAL EITHER STOCKPILED OR DISPOSED OF IN A FLOOD PLAIN WOULD REQUIRE A KANSAS STATE BOARD OF AGRICULTURE PERMIT. ANY MATERIAL DUMPED IN WATERS OF THE UNITED STATES OR WETLANDS IS SUBJECT TO U.S. CORPS OF ENGINEERS PERMITTING REGULATIONS. ANY MATERIAL BURIED OR STOCKPILED BEYOND APPROVED CONSTRUCTION LIMITS WOULD REQUIRE ADDITIONAL ARCHEOLOGICAL INVESTIGATIONS UNLESS BURIED IN A PREVIOUSLY APPROVED BORROW LOCATIONS.

5. COST OF EXCAVATION, HAULING, AND DUMPING OF EXCESS EXCAVATION SHALL BE SUBSIDIARY TO THE PROJECT.

6. A PORTION OF EXCESS EXCAVATED MATERIAL SHALL BE MOUNDED AROUND MANHOLES WHICH EXTEND MORE THAN ONE (1) FOOT ABOVE THE EXISTING GROUND. SUCH MOUNDS SHALL BE CONSTRUCTED WITH A SIX (6) FOOT DIAMETER FLAT TOP WITH 4 TO 1 SIDE SLOPES DOWN TO THE ORIGINAL GROUND. THE ELEVATION OF THE FLAT TOP OF THE MOUND SHALL BE 0.4 FOOT BELOW THE TOP OF THE MANHOLE.

7. ALL STUBS AND PLUGGED PIPES SHALL BE LOCATED WITH GREEN PLASTIC TAPE IN THE SAME MANNER AS RISERS.

8. PRIOR TO LAYING SEWER LINES USING EXISTING STUBS IN EXISTING MANHOLES, THE CONTRACTOR SHALL EXPOSE AND VERIFY THE ELEVATION, GRADE AND ALIGNMENT OF EXISTING STUBS AND NOTIFY THE ENGINEER OF ANY DEVIATION FROM THE PLAN. WHERE CONNECTION TO AN EXISTING MANHOLE THAT DOES NOT HAVE AN EXISTING STUB OR THE STUB IS UNUSABLE DUE TO ELEVATION GRADE OR ALIGNMENT, THE CONTRACTOR SHALL RESHAPE THE EXISTING MANHOLE INVERT TO PROVIDE SMOOTH FLOW. THE COST OF RE-SHAPING EXISTING MANHOLE INVERTS IS INCIDENTAL TO THE PROJECT.

9. TREES AND SHRUBS IN PUBLIC RIGHT-OF-WAY WHICH ARE IN DIRECT CONFLICT WITH PROPOSED NEW CONSTRUCTION SHALL BE REMOVED BY THE CONTRACTOR WITH THE ENGINEER'S APPROVAL. TREES AND SHRUBS WHICH ARE NOT IN DIRECT CONFLICT WITH PROPOSED NEW CONSTRUCTION SHALL BE SAVED AND PROTECTED FROM DAMAGE. COST OF REMOVAL SHALL BE PAID AS SITE PREPARATION AND RESTORATION.

10. ALL DISTURBED AREAS WILL BE SEEDED IN CONFORMANCE WITH CITY OF BEL AIRE SPECIFICATIONS, EXCEPT RYE GRASS MAY BE SUBSTITUTED FOR FESCUE. SEEDING COST IS CONSIDERED TO BE INCLUDED IN THE BID OF CLEARING AND RESTORATION.

11. TREES TO BE REMOVED ARE MARKED ⊗. ALL TREES WHICH IN THE OPINION OF THE FIELD ENGINEER CAN BE SAVED, SHALL BE SAVED. REMOVAL OF TREES SHALL BE CONSIDERED AS SUBSIDIARY TO SITE CLEARING & RESTORATION.

BENCHMARK

BM#1 "□" CUT ON SW CORNER OF CURB INLET ON NW CORNER OF 45TH. ST. NORTH AND HEDGEROW 10' EAST AND 1' NORTH OF SE CORNER OF BEL AIRE HEIGHTS GARDEN HOMES PLAT.
ELEV.=1409.12

BM#2 "□" CUT ON TOP OF CURB S. SIDE OF HEDGEROW STREET AT P.T. OF CURVE.
ELEV.=1428.22

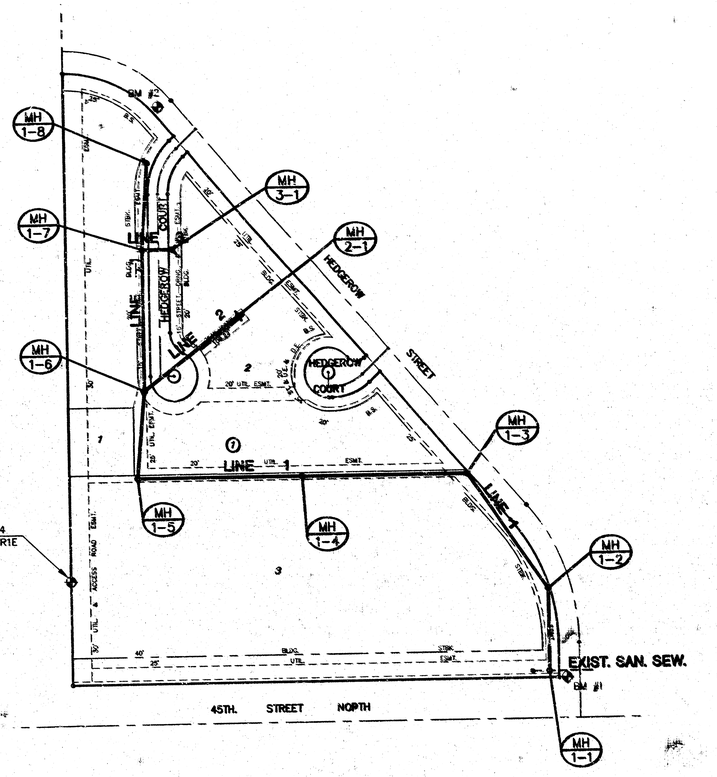

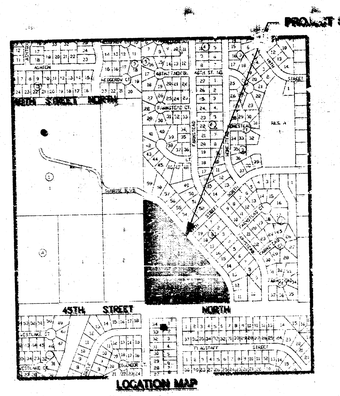

SCALE: 1" = 100'

LEGEND
• IRON

INDEX TO DRAWINGS

SHEET NO.	DESCRIPTION
1	TITLE SHEET
2	MANHOLE DETAILS
3	LINE 1 PLAN & PROFILE
4	LINE 1, 2 & 3 PLAN & PROFILE
5	FINAL PLAT

APPROVED AS NOTED
BY CITY ENGINEER OF WICHITA

Sanitary Sewers 1/28/00 VRH

Storm Sewers

Driveway Approaches

Water Mains

Paving

NOTE TO CONTRACTOR

INSPECTION AND TESTING FOR THIS PROJECT IS TO BE PROVIDED BY A LICENSED CONSULTING ENGINEERING FIRM UNDER CONTRACT WITH OWNER/DEVELOPER. SAID INSPECTION TO BE IN ACCORDANCE WITH THE CITY OF WICHITA STANDARD CONSTRUCTION ENGINEERING PRACTICES AND CERTIFIED BY A LICENSED PROFESSIONAL ENGINEER. NO WORK SHALL BE PERFORMED IN DEDICATED EASEMENTS OR THE PUBLIC RIGHT-OF-WAY BY THE CONTRACTOR WITHOUT SUCH INSPECTION NOR SHALL ANY WORK BE COMMENCED IN DEDICATED EASEMENTS OR PUBLIC RIGHT-OF-WAY WITHOUT WRITTEN AUTHORIZATION BY THE CITY ENGINEER.

Booked
P-129
5-25-00
R. Loomis

BRADLEY J. ALLEN
LICENSED
11139
KANSAS
PROFESSIONAL ENGINEER
1/27/2000

CITY OF WICHITA PRIVATE PROJECT NO. 977PPS(607861)

MID-KANSAS ENGINEERING CONSULTANTS, INC.
411 N. WEBB ROAD
WICHITA, KS. 67206
316-684-5600

BEL AIRE HEIGHTS GARDEN HOME ADDITION
PROJECT NAME

SANITARY SEWER PLANS
SHEET TITLE

GJA/JTC	DM	GJA/JTC
DESIGN BY:	DRAWN BY:	CHECKED BY:
JANUARY 2000	99176BT	1 / 5
DATE	JOB NO.	SHEET/OF

A:\BELAIRE\99176\SAN\99176BT.DWG Thu Jan 27 14:59:48 2000

SEWER APPURTENANCES DETAILS

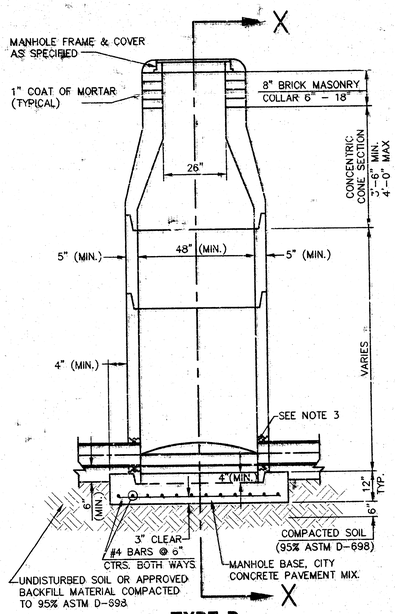

TYPE P
STANDARD MANHOLE

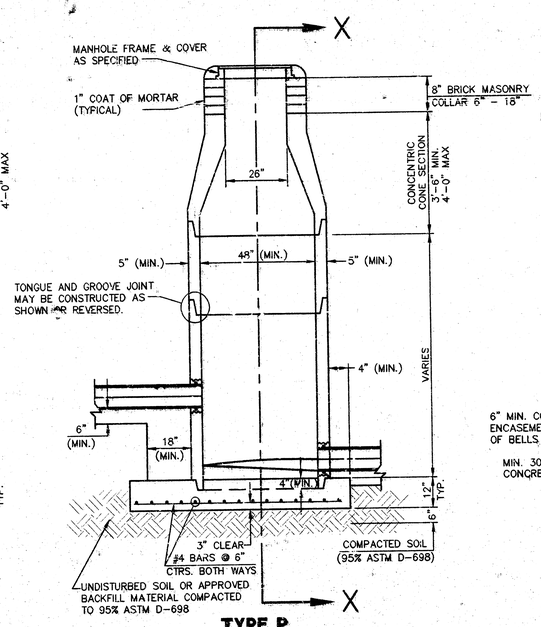

TYPE P
INSIDE DROP MANHOLE

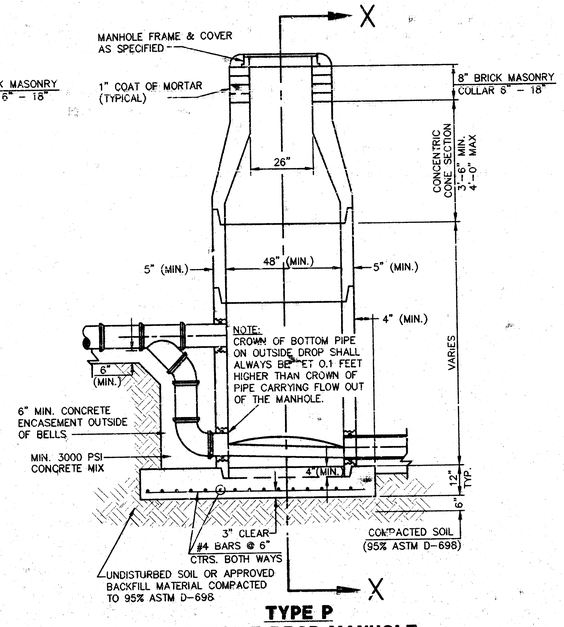

TYPE P
OUTSIDE DROP MANHOLE

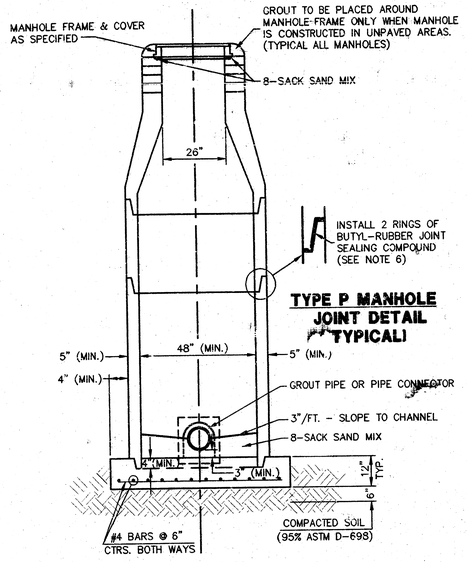

TYPE P MANHOLE JOINT DETAIL (TYPICAL)

SECTION X (TYPICAL)

GENERAL NOTES - PRECAST MANHOLE NOTES

1. ALL PRECAST CONCRETE MANHOLE SECTIONS SHALL CONFORM TO THE LATEST REVISION OF A.S.T.M. C478 AS MODIFIED BY THE SPECIFICATIONS.
2. NON-SHRINK GROUT SHALL BE NON-METALLIC TYPE.
3. APPROVED FLEXIBLE WATERSTOP GASKETS SHALL BE INSTALLED TO JOIN THE SEWER TO THE MANHOLE WALL WHEN A.B.S. COMPOSITE PIPE OR P.V.C. PIPE IS USED. FOR OTHER TYPES OF PIPE THE SEWER SHALL BE GROUTED IN PLACE WITH NON-SHRINK GROUT. THE SEWER PIPE SHALL BE SUPPORTED WITH CONCRETE ENCASEMENT A MINIMUM OF 3 FEET FROM THE MANHOLE WALL AND TO THE FIRST JOINT FOR V.C.P. SUCH THAT THE JOINT REMAINS FLEXIBLE.
4. ALL INSIDE SURFACES OF THE CONCRETE MANHOLE WHICH WOULD BE EXPOSED TO SEWER GAS SHALL BE COATED WITH 2 COATS TNEMEC SERIES 66 HI-BUILD EPOXOLINE, DRY THICKNESS OF 8 MILS (MIN.)
5. EXTERIOR MANHOLE WALLS SHALL BE COATED WITH 1 COAT MOBILARMA 633 BITUMINOUS COATING.
6. JOINT SEALING COMPOUND SHALL BE KENT SEAL NO. 2 OR APPROVED EQUAL.
7. PRECAST MANHOLES SHALL BE SET AT LEAST 4 INCHES INTO THE MANHOLE BASE.
8. TOP OF MANHOLE FLOOR SLAB SHALL BE AT LEAST 3 INCHES BELOW THE FLOW LINE OF THE OUTLET PIPE TO INSURE SUFFICIENT MINIMUM THICKNESS OF SHAPED INVERT.
9. LIFTING HOLES SHALL BE FILLED WITH NON-SHRINK GROUT AND THE INTERIOR SURFACE COATED AS SPECIFIED.
10. MORTAR USED IN MASONRY CONSTRUCTION SHALL CONTAIN 8 SACKS OF CEMENT PER CUBIC YARD. CONCRETE USED IN MANHOLE BASES SHALL CONFORM TO THE REQUIREMENTS OF CONCRETE FOR CONCRETE PAVEMENT CONSTRUCTION AS SPECIFIED IN THE CITY STANDARD PAVING SPECIFICATIONS USING CITY CONCRETE PAVEMENT MIX WITHOUT AIR ENTRAINING ADMIXTURE. MORTAR SHALL BE PLACED AROUND THE MANHOLE RING AS SHOWN ON THE DRAWINGS WHEN MANHOLES ARE CONSTRUCTED IN UNPAVED AREAS. MANHOLES CONSTRUCTED WHERE PIPE SIZES ARE SMALLER THAN 24" SHALL HAVE AN INSIDE DIAMETER OF 4'. MANHOLES CONSTRUCTED WHERE PIPE SIZES ARE 24" OR LARGER SHALL HAVE AN INSIDE DIAMETER OF 5'. COMPLETED MANHOLE SHALL BE WITHOUT LEAKS AND WATER TIGHT.
11. REINFORCING STEEL SHALL BE INSTALLED IN THE MANHOLE BASES AND SHALL CONSIST OF NO. 4 BARS PLACED ON 6" CENTERS IN BOTH DIRECTIONS. THE MANHOLE BASE REINFORCEMENT SHALL BE PLACED AT LEAST 3" ABOVE THE BOTTOM OF THE MANHOLE BASE. ALL COSTS FOR FURNISHING AND INSTALLING REINFORCING STEEL SHALL BE INCLUDED IN THE UNIT PRICE BID FOR THE MANHOLE.
12. OPENINGS SHALL BE CUT INTO THE MANHOLE WALL WHEN OUTSIDE DROPS ARE CONSTRUCTED ON EXISTING MANHOLES. SUCH OPENINGS CUT INTO EXISTING MANHOLES SHALL BE AS SMALL AS PRACTICAL TO FACILITATE INSTALLING AND GROUTING THE NEW PIPE IN PLACE. WATERSTOP GASKETS SHALL BE USED WITH P.V.C. AND A.B.S. COMPOSITE PIPE. THE NEW PIPE SHALL BE GROUTED INTO THE OPENING USING AN APPROVED NONSHRINK GROUT FOR THE FULL MANHOLE WALL THICKNESS. THE EXTERIOR OF THE COMPLETED CONNECTION SHALL BE SEALED WITH AN APPROVED BITUMINOUS COATING SUCH THAT THE CONNECTION WILL BE WATER TIGHT. FLOOR OF MANHOLE SHALL BE MODIFIED TO FORM NEW FLOW CHANNEL FOR THE NEW CONNECTION AS INDICATED BY THE DRAWING. THIS WORK, INCLUDING MODIFICATION OF MANHOLE FLOOR, SHALL BE PAID FOR AT THE UNIT PRICE BID FOR OUTSIDE DROP STACK CONSTRUCTED ON EXISTING MANHOLE.
13. THE FLOORS OF ALL MANHOLES SHALL BE SHAPED WITH FLOW CHANNELS SUCH THAT THE MANHOLES WILL BE SELF CLEANING AND FREE OF AREAS WHERE SOLIDS COULD BE DEPOSITED AS SEWAGE FLOWS THROUGH THE MANHOLE FROM ALL INLET PIPES TO THE OUTLET PIPE. FLOW CHANNELS SHALL BE FORMED TO MATCH THE BOTTOM HALVES OF THE INFLOWING PIPES AND THE OUTFLOWING PIPE AS SHOWN BY THE DRAWINGS EXCEPT FOR INSIDE DROP MANHOLES. FLOW CHANNELS FOR INSIDE DROP MANHOLES SHALL BE CONSTRUCTED AS INDICATED BY THE DRAWING. MANHOLE FLOORS SHALL HAVE SLOPES OF 3 INCHES PER FOOT IN THE AREAS OUTSIDE OF THE FLOW CHANNELS SLOPED TOWARD THE FLOW CHANNELS. PIPES LAID THROUGH MANHOLES SHALL HAVE THE TOP HALF REMOVED TO NEAT LINES FOR THE FULL INSIDE DIAMETER OF THE MANHOLE. MANHOLE FLOORS SHALL THEN BE SHAPED AROUND THE BOTTOM HALF OF THE PIPE WHICH FORMS THE FLOW CHANNEL.
14. PIPES INSTALLED WITHIN THE EXCAVATION MADE FOR THE MANHOLE SHALL BE CRADLED WITH CONCRETE TO THE LIMITS OF THE MANHOLE EXCAVATION. WHEN CLAY PIPE IS USED, THE CRADLE SHALL EXTEND TO THE FIRST JOINT OUTSIDE THE MANHOLE. THE CRADLE SHALL BE TERMINATED AT THE CLAY PIPE JOINT IN A MANNER WHICH WILL MAINTAIN THE FLEXIBILITY OF THE JOINT. COST OF CRADLE WITHIN MANHOLE EXCAVATION OR TO CLAY PIPE JOINTS ADJACENT TO MANHOLE SHALL BE INCLUDED IN THE UNIT PRICE BID FOR THE MANHOLE.
15. MANHOLE COVER CASTINGS AND MANHOLE FRAME CASTINGS SHALL CONFORM TO THE REQUIREMENTS AS INDICATED IN THE STANDARD SPECIFICATIONS AND AS SHOWN IN THE STANDARD DETAIL DRAWING.
16. THE VERTICAL DROP IN INSIDE DROP MANHOLES SHALL NOT EXCEED 2' FOR INFLOWING PIPES SIZED 12" OR SMALLER AND 2' FOR INFLOWING PIPES LARGER THAN 12". THE CROWNS OF INFLOWING PIPES SHALL NEVER BE SET LOWER THAN THE CROWN OF THE OUTFLOWING PIPE.
17. STANDARD MANHOLES AND STANDARD INSIDE DROP MANHOLES SHALL BE BID AS STANDARD MANHOLES FOR THE TYPE AND DIAMETER INDICATED. OUTSIDE DROP MANHOLES SHALL BE BID AS STANDARD OUTSIDE DROP MANHOLES FOR THE TYPE AND DIAMETER INDICATED. ALL MANHOLE DIAMETERS WILL BE 4' UNLESS INDICATED OTHERWISE.
18. A BRICK MASONRY COLLAR SHALL BE INSTALLED BETWEEN THE CAST IRON FRAME AND THE CONCENTRIC CONE. THE COLLAR WILL HAVE 8" WALLS AND A VERTICAL HEIGHT OF 6" MINIMUM AND 18" MAXIMUM. A 1" COAT OF MORTAR WILL BE PLASTERED ON THE OUTSIDE OF THE COLLAR. THE USE OF PRE-CAST CONCRETE SPACERS FOR MANHOLE TOP ADJUSTMENT IS ALSO ALLOWED.

THE CITY OF WICHITA
CITY ENGINEER'S OFFICE
CITY HALL - SEVENTH FLOOR
455 NORTH MAIN STREET
WICHITA, KANSAS 67202
(316) 268-4501
(316) 268-4114 FAX

STANDARD TYPE 'P' MANHOLES

M. E. LINDEBAK P.E. - CITY ENGINEER

PROJECT NUMBER	INDEX CODE
XXX-XXXXX	XXXXXX
DATE: MAR 96	SHEET 2 OF 5

2-BELLART\99726\SHN\99726D.DWG
Thu Jan 27 14:56:27 2000

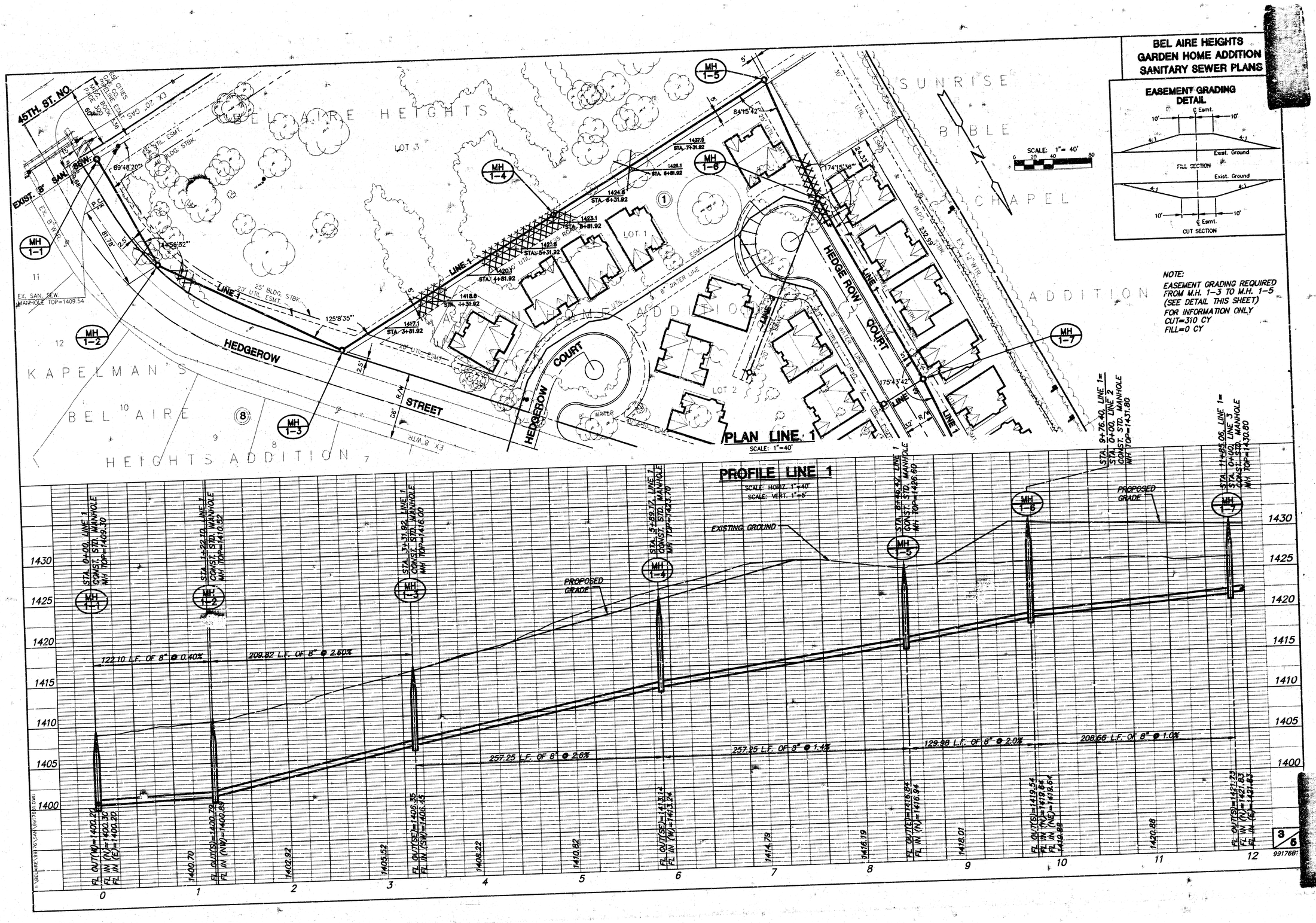
BEL AIRE HEIGHTS
GARDEN HOME ADDITION
SANITARY SEWER PLANS
EASEMENT GRADING DETAIL
FILL SECTION
CUT SECTION
NOTE:
EASEMENT GRADING REQUIRED FROM M.H. 1-3 TO M.H. 1-5 (SEE DETAIL THIS SHEET)
FOR INFORMATION ONLY
CUT=310 CY
FILL=0 CY
PLAN LINE 1
SCALE: 1"=40'
PROFILE LINE 1
SCALE: HORIZ. 1"=40'
SCALE: VERT. 1"=5'
EXISTING GROUND
PROPOSED GRADE
HEDGEROW STREET
HEDGEROW COURT
HEDGE ROW COURT
45TH. ST. NO.
KAPELMAN'S BEL AIRE HEIGHTS ADDITION
SUNRISE BIBLE CHAPEL ADDITION
122.10 L.F. OF 8" @ 0.40%
209.82 L.F. OF 8" @ 2.60%
257.25 L.F. OF 8" @ 2.6%
257.25 L.F. OF 8" @ 1.4%
129.98 L.F. OF 8" @ 2.0%
208.66 L.F. OF 8" @ 1.0%
3/5
99176B1

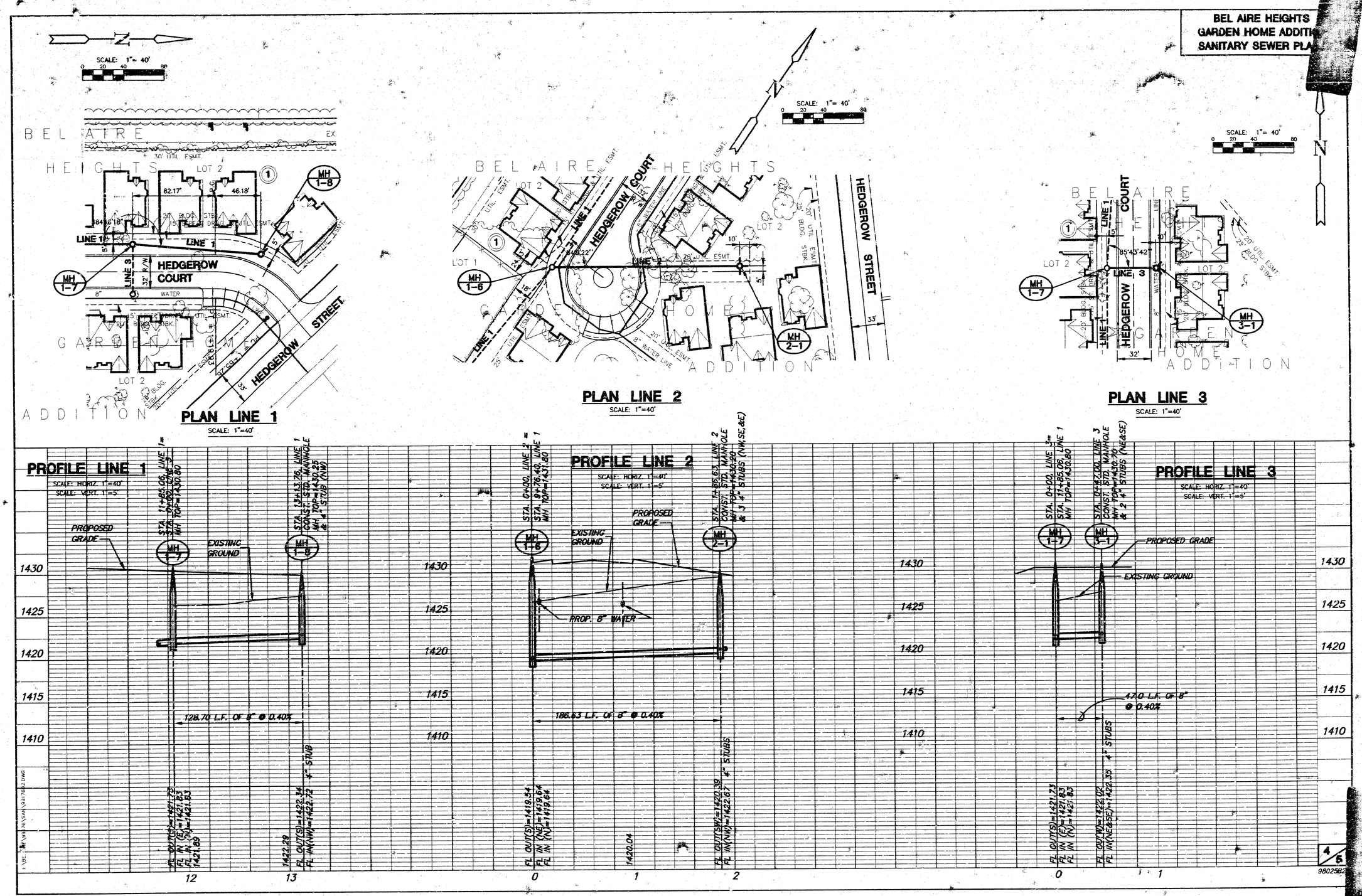
BEL AIRE HEIGHTS
GARDEN HOME ADDITI
SANITARY SEWER PLA
SCALE: 1"= 40'
BEL AIRE HEIGHTS
GARDEN HOME ADDITION
HEDGEROW COURT
HEDGEROW STREET
LINE 1
LINE 2
LINE 3
MH 1-7
MH 1-8
MH 1-6
MH 2-1
MH 3-1
PLAN LINE 1
SCALE: 1"=40'
PLAN LINE 2
SCALE: 1"=40'
PLAN LINE 3
SCALE: 1"=40'
PROFILE LINE 1
SCALE: HORIZ. 1"=40'
SCALE: VERT. 1"=5'
PROFILE LINE 2
SCALE: HORIZ. 1"=40'
SCALE: VERT. 1"=5'
PROFILE LINE 3
SCALE: HORIZ. 1"=40'
SCALE: VERT. 1"=5'
PROPOSED GRADE
EXISTING GROUND
PROP. 8" WATER
128.70 L.F. OF 8" @ 0.40%
186.63 L.F. OF 8" @ 0.40%
47.0 L.F. OF 8" @ 0.40%
1430
1425
1420
1415
1410
12
13
0
1
2
4/5
98025B2

FINAL PLAT OF

BEL AIRE HEIGHTS GARDEN HOME ADDITION

AN ADDITION TO BEL AIRE, SEDGWICK COUNTY, KANSAS

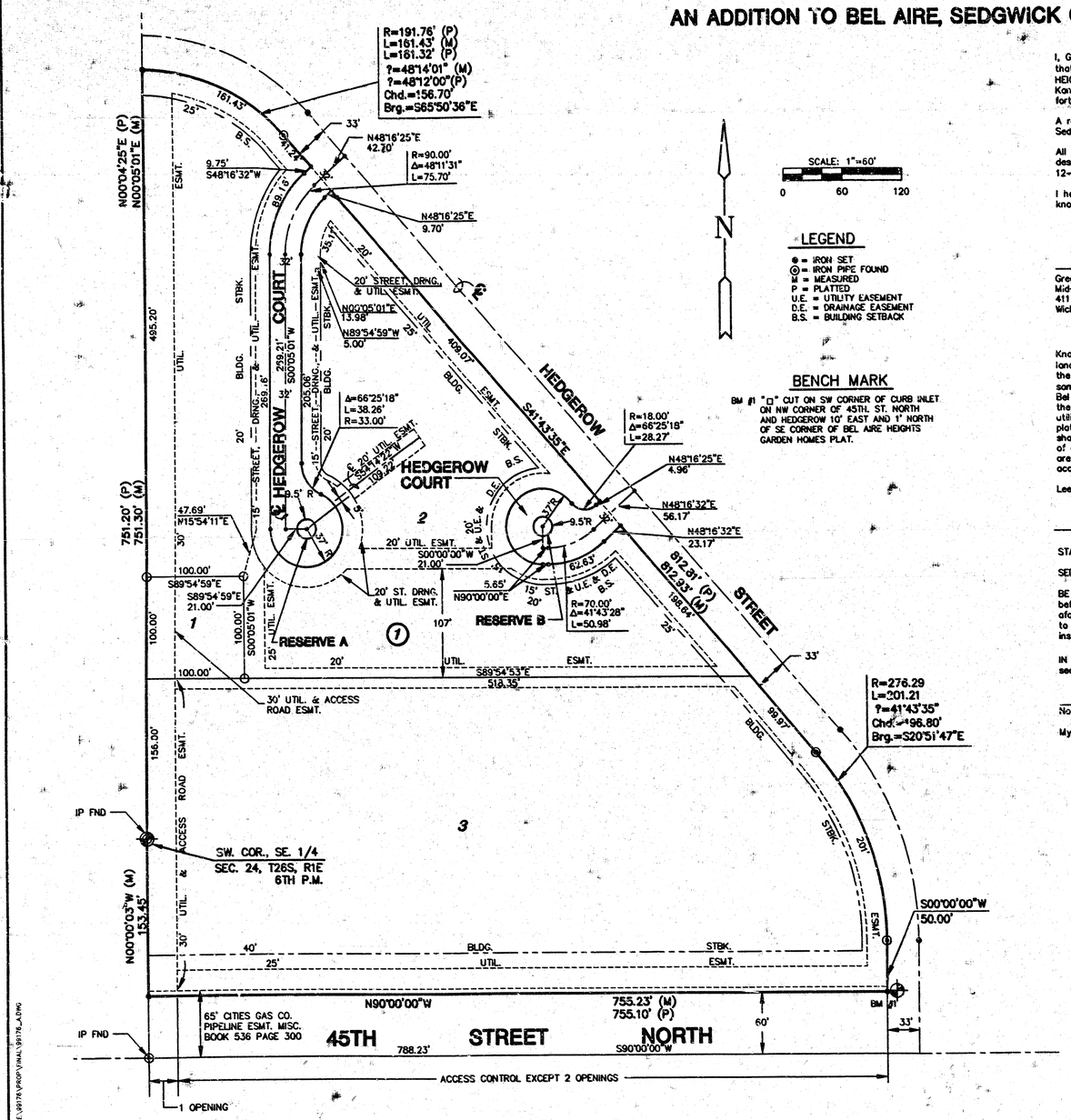

SCALE: 1"=60'

0 60 120

N

LEGEND

- ⊕ = IRON SET
- ⊙ = IRON PIPE FOUND
- M = MEASURED
- P = PLATTED
- U.E. = UTILITY EASEMENT
- D.E. = DRAINAGE EASEMENT
- B.S. = BUILDING SETBACK

BENCH MARK

BM #1 "□" CUT ON SW CORNER OF CURB INLET ON NW CORNER OF 45TH. ST. NORTH AND HEDGEROW 10' EAST AND 1' NORTH OF SE CORNER OF BEL AIRE HEIGHTS GARDEN HOMES PLAT.

I, Gregory J. Allison, a Registered Land Surveyor in Kansas, do hereby certify that I have been in responsible charge of surveying and platting of "BEL AIRE HEIGHTS GARDEN HOME ADDITION", an addition to Bel Aire, Sedgwick County, Kansas, into lots, blocks, streets and reserves the same being accurately set forth in the accompanying plat and described herein:

A replat of Lot 1 Block 9, Kopplemans Bel Heights, an addition to Bel Aire, Sedgwick County, Kansas.

All Lots, Blocks, Easments, Streets, and Building Setbacks found within the above described property are hereby vacated and replatted by virtue of K.S.A. 12-512(b).

I hereby certify that the details of this plat are correct to the best of my knowledgeand belief this _____ day of _____,1999

_____

Gregory J. Allison, P.E., R.L.S. #1257
Mid-Kansas Engineering Consultants, Inc.
411 North Webb Road
Wichita, KS 67206

Know all men by these presents that we the undersigned property owners of the land as above set forth in the Registered Land Surveyor's Certificate, have caused the same to be surveyed and platted into lots, blocks, streets and reserves the same to be known as "BEL AIRE HEIGHTS GARDEN HOME ADDITION", an addition to Bel Aire, Sedgwick County, Kansas. The streets are hereby dedicated to and for the use of the public. Easements for the construction and maintenance of public utilities and drainage are hereby granted to the public. Reserves A and B are platted for open space, landscaping, irrigation and monuments. Reserves A and B shall be owned and maintained by the homeowners association. All abutters rights of access to or from 45th street north over and across the South line of Lot 3, are hereby granted to the governing, provided however, Lot 3 Block 1 shall have access to 45th street as indicated on the face of the plat.

Leewood and Associates, L.L.C.

_____

STATE OF KANSAS)
) ss.
SEDGWICK COUNTY)

BE IT REMEMBERED, that on this _____ day of _____ 1999. before me the undersigned, a Notary Public in and for the County and State aforesaid, come _____
to me personally known to be the same person who executed the foregoing instrument of writing and duly acknowledged the execution of the same.

IN WITNESS WHEREOF, I have hereunto set my hand and affixed my official seal, the day and year last above written.

_____
Notary Public

My appointment expires: _____

We, Emprise Bank, holders of a mortgage on the above described property, do hereby consent to the plat of "BEL AIRE HEIGHTS GARDEN HOME ADDITION".

Emprise Bank

_____

STATE OF KANSAS)
) ss.
SEDGWICK COUNTY)

BE IT REMEMBERED, that on this _____ day of _____, 1999. before me the undersigned, a Notary Public in and for the County and State aforesaid, _____
came to me personally known to be the same person who executed the foregoing instrument of writing and duly acknowledged the execution of the same.

IN WITNESS WHEREOF, I have hereunto set my hand and affixed my official seal, the day and year last above written.

_____
Notary Public

My appointment expires: _____

This plat of "BEL AIRE HEIGHTS GARDEN HOME ADDITION", has been submitted to and approved by the Bel Aire Planning Commission, Bel Aire, Kansas.

Dated this _____ day of _____, 1999.

BEL AIRE PLANNING COMMISSION

_____, Chairman
James J. Jackson

_____, Secretary
Betty L. Martine

This plat approved and all dedications shown thereon, if any, accepted by the City Council of the City of Bel Aire, Kansas, this ____ day of _____, 1999.

_____, Mayor
Gery O'Neal

_____, City Clerk
Sherryl L. Cutter

Entered on transfer record this _____ day of _____, 1999.

_____, County Clerk
James Alford

STATE OF KANSAS)
) ss:
SEDGWICK COUNTY)

This is to certify that this instrument was filed for record in the Register of Deeds office this ____ day of _____, 1999.

_____, Register of Deeds
Bill Maek

_____, Deputy
Linda Kizzire

Reviewed in accordance with K.S.A. 58-2005 on this _____ day of _____, 1999.

_____
Tricia L. Robello, LS #1246
Deputy County Surveyor
Sedgwick County, Kansas

I:\BELAIRE\99176\PROP\PLAT\99176_A.DWG Fri Jan 28 09:08:32 2000

60 40 20 0 81