SANITARY SEWER
LAT. 39, SUB. 2, RELOCATE

TO SERVE A PART OF Lot 1

COLEMAN-DETWEILER ADDITION

TO WICHITA, SEDGWICK COUNTY, KANSAS

APPROVED AS NOTED
BY CITY ENGINEER OF WICHITA &
WATER & SEWER DEPARTMENT

CITY ENGINEER VRH 12/17/01

WATER & SEWER DEPT. [signature] 12/3/01

NOTE TO CONTRACTOR

INSPECTION AND TESTING FOR THIS PROJECT IS TO BE PROVIDED BY A LICENSED CONSULTING ENGINEERING FIRM UNDER CONTRACT WITH THE OWNER/DEVELOPER. SAID INSPECTION IS TO BE IN ACCORDANCE WITH THE CITY OF WICHITA STANDARD CONSTRUCTION ENGINEERING PRACTICES AND CERTIFIED BY A LICENSED PROFESSIONAL ENGINEER. NO WORK SHALL BE PERFORMED IN DEDICATED EASEMENTS OR THE PUBLIC RIGHT-OF-WAY BY THE CONTRACTOR WITHOUT SUCH INSPECTION NOR SHALL ANY WORK BE COMMENCED IN DEDICATED EASEMENTS OR PUBLIC RIGHT-OF-WAY WITHOUT WRITTEN AUTHORIZATION BY THE CITY ENGINEER.

CITY OF WICHITA, KANSAS

M.E. LINDEBAK, PE **CITY ENGINEER**

PRIVATE PROJECT NO. 1184 PPS

OCA # 607861

November 2001

NOTES

1. THE CONTRACTOR WILL BE REQUIRED TO PROVIDE ADVANCE NOTICE OF TWENTY-FOUR (24) HOURS TO UTILITY COMPANIES PRIOR TO STARTING ANY EXCAVATION AS FOLLOWS:

   KANSAS ONE-CALL 687-2470

   THE CONTRACTOR MUST NOTIFY THE FOLLOWING IN CASE OF EMERGENCY:

CABLEVISION	262-4270 OR 263-2061
KANSAS GAS & ELECTRIC (GAS)	263-7511
KANSAS GAS & ELECTRIC (ELECTRIC)	264-1141
ARKLA GAS COMPANY	942-8350 OR 263-8161
SOUTHWESTERN BELL TELEPHONE	1-571-2611
CITY OF WICHITA WATER DEPT.	268-4908
CITY OF WICHITA SEWER MAINTENANCE	268-4071

2. THE CONTRACTOR SHALL BE RESPONSIBLE FOR PROPERTY IRONS. THE CONTRACTOR WILL BE REQUIRED TO REESTABLISH ANY PROPERTY IRONS WHICH ARE DAMAGED OR DESTROYED BY HIS CONSTRUCTION OPERATIONS. SUCH IRONS SHALL BE REESTABLISHED BY A LICENSED LAND SURVEYOR IN ACCORDANCE WITH STATE LAWS.
3. UNLESS OTHERWISE SPECIFIED ON THE PLANS, MANHOLES MAY BE TYPE "B" "C" OR "D" MANHOLES. MANHOLES SHALL BE CONSTRUCTED IN ACCORDANCE WITH THE STANDARD SPECIFICATIONS AND THE STANDARD DETAIL DRAWINGS.
4. TRAFFIC WILL NOT BE AFFECTED IN THIS AREA OF CONSTRUCTION.
5. CONTRACTOR SHALL PROVIDE POSITIVE DRAINAGE AWAY FROM ALL MANHOLE COVERS.

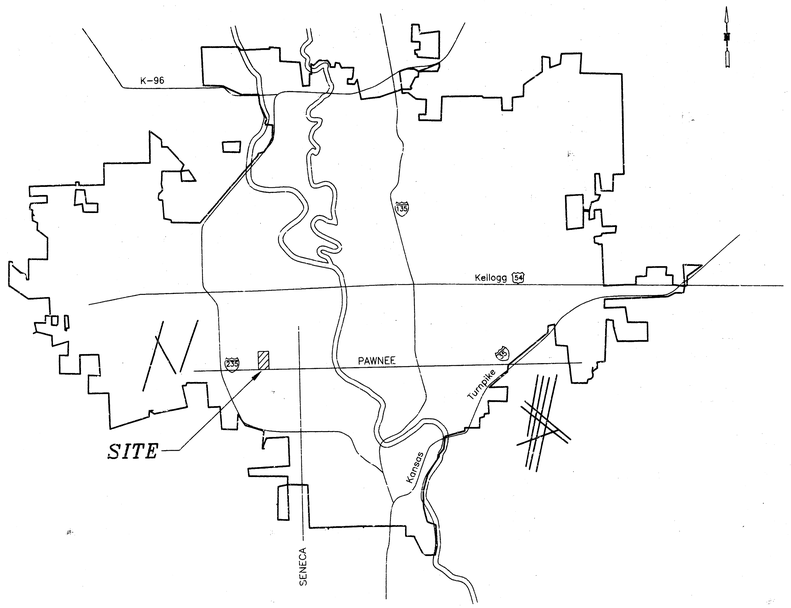

INDEX

1. Cover Sheet
2. Plan & Profile – Line 1
3. Recorded Plat "Coleman-Detweiler Addition"

4-5. Standard Manhole Details

W. R. CARTER

Booked
P.216
9-2-02
RAL

DON C. MOEHRING II
LICENSED
3463
KANSAS
PROFESSIONAL ENGINEER

12-13-01

MOEHRING & ASSOCIATES
CONSULTING ENGINEERS
WICHITA

16-3-1 12

C:\SC2000\WORK\SJCFSSCOV.DWG

1" = 40' HORIZ.
1" = 5' VERT.

STA. 0+00 LINE 1 (MH 1-1)
CONSTRUCT STD. TYPE P MANHOLE
OVER EXISTING 8" V.C.P. SAN. SEWER
TOP = ~~102.03~~ 102.12
N. 860.37
E. 1469.56

STA. 0+81.08 LINE 1 (MH 1-2)
CONSTRUCT STD. TYPE P MANHOLE
TOP = 102.62 OK
N. 941.45
E. 1469.56

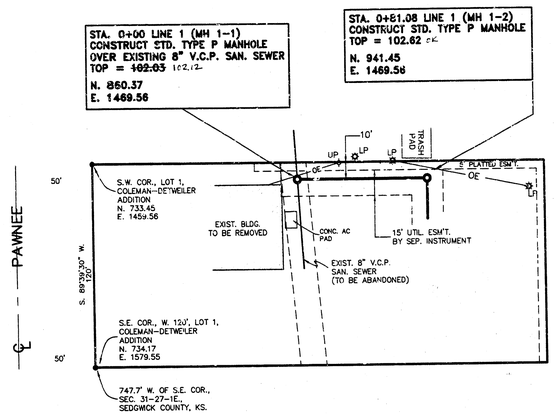

AS-BUILT ELEVATIONS
TAKEN 3-28-02, BY
CRAIG MCEHRING, LS. 875.

STA. 0+81.08 LINE 1 (MH 1-2)
TOP = 102.62 OK
N. 941.45
E. 1469.56

1" = 40' HORIZ.
1" = 5' VERT.

STA. 1+83.35 LINE 1 (END LINE 1)
CONNECT TO EXIST. MANHOLE
RE-SHAPE INVERT & GROUT PIPE
N. 942.05
E. 1571.83

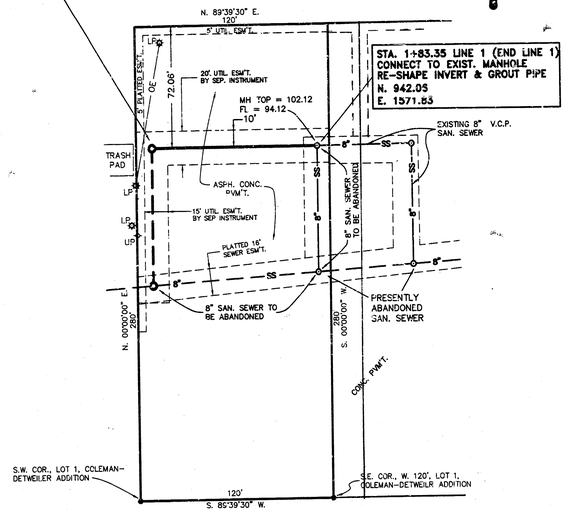

LEGEND

OE = OVERHEAD ELECTRIC
UP = UTILITY POLE
LP = LIGHT POLE
SS = SANITARY SEWER
MH = MANHOLE

BENCHMARKS

CITY DISK ON TRAFFIC CONTROLLER BASE,
S.W. CORNER OF PAWNEE ST. & SENECA ST.
ELEV. = 104.76 CITY DATUM.

N. RIM OF MANHOLE, STA. 1+83.35.
ELEV. = 102.12 CITY DATUM.

— ℄ — PAWNEE —

LINE 1

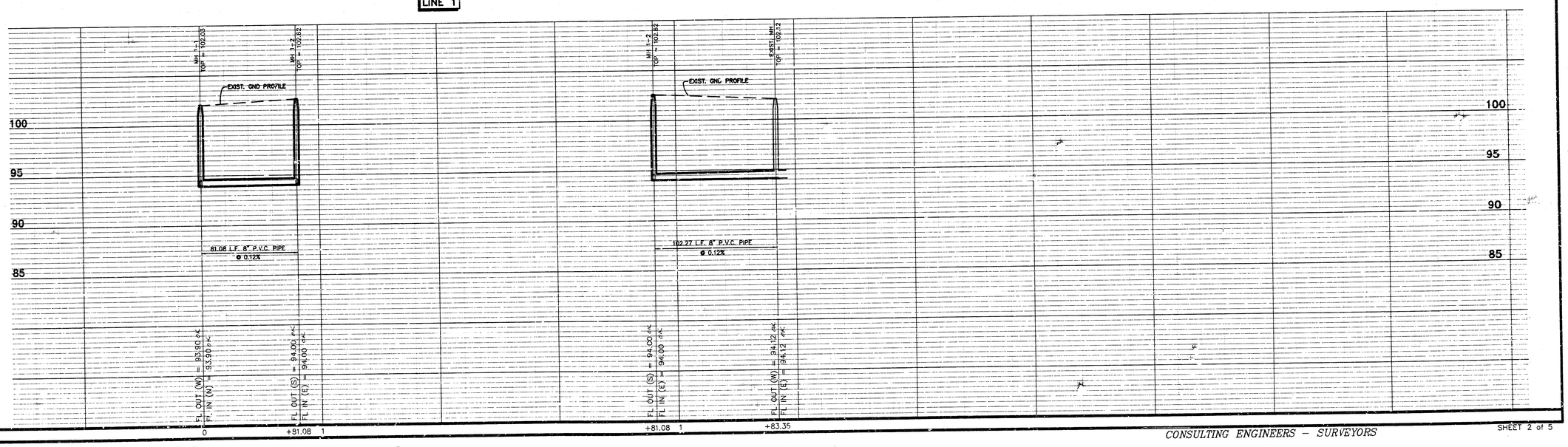

C:\SC2000\WORK\SJC\SS1.DWG

G-2 1-11

COLEMAN-DETWEILER ADDITION
WICHITA, SEDGWICK COUNTY, KANSAS

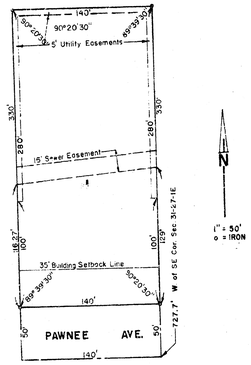

State of Kansas) ss
County of Sedgwick)

I, Kenneth O. Taylor, Civil Engineer in said State and County, do hereby certify that I have surveyed and platted "COLEMAN-DETWEILER ADDITION", Wichita, Sedgwick County, Kansas, and that the accompanying plat is a true and correct exhibit of said survey described as follows:

Beginning 132 feet west of the SE corner of the W½ of the S½ of the S½ of the SE¼ of the SE¼, Sec. 31, T27S, R1E of the 6th P.M., thence north 330 feet; thence west 74 feet; thence south 330 feet; thence east to the point of beginning.

The west 66 feet of the east 132 feet of the W½ of the S½ of the S½ of the SE¼ of the SE¼, Sec. 31, T27S, R1E of the 6th P.M.

Kenneth O Taylor Civil Engineer

Know all men by these presents that we, Blevins-Evans-Peltzer Realty Inc., a corporation, by C. K. Blevins, President and Elvin B. Coleman and Agatha Maxine Coleman, husband and wife, as individuals, have caused the land described in the civil engineer's certificate to be platted into a lot and an avenue to be known as "COLEMAN-DETWEILER ADDITION", Wichita, Sedgwick County, Kansas. Utility easements as indicated on the plat are hereby granted for the construction and maintenance of all public utilities. The avenue is hereby dedicated to and for the use of the public.

BLEVINS-EVANS-PELTZER REALTY, INC.

By_____, PRESIDENT

ATTEST:

_____, Secretary

State of Kansas)ss
County of Sedgwick)

Be it remembered that on this____day of_____, 19___, before me a notary public in and for said County and State came Elvin B. Coleman and Agatha Maxine Coleman, husband and wife, as individuals, and C. K. Blevins, President of Blevins-Evans-Peltzer Realty, Inc., a corporation, to me personally known to be the same persons as such individuals and as president of said corporation who executed the foregoing instrument of writing and duly acknowledged the execution of same. In testimony whereof, I have hereunto set my hand and affixed my notarial seal the day and year above written.

_____Notary Public

My commission expires_____.

This plat of "COLEMAN-DETWEILER ADDITION", Wichita, Sedgwick County, Kansas, has been approved by the Wichita-Sedgwick County Metropolitan Area Planning Commission, Wichita, Kansas, and is hereby transmitted to the Board of Commissioners of the City of Wichita, Kansas, with the recommendation that such plat be approved as proposed.

Dated this 4th day of NOVEMBER, 1965.

Wichita-Sedgwick County Metropolitan Area Planning Commission

By [signature] Vice-Chairman

C. Bichler Foster Secretary

Approved by the Board of City Commissioners this 23rd day of November, 1966.

[signature] Mayor

Ralph W. Eberly City Clerk

Approved by the Board of County Commissioners this 30th day of December 30, 1965.

[signature] Chairman

[signature] Commissioner

[signature] Commissioner

W O Williams
County Clerk

Entered on transfer record this 30th day of December, 1965.

W O Williams County Clerk

State of Kansas) ss
County of Sedgwick)

This is to certify that this instrument was filed for record in the Register of Deeds Office on the 30th day of December, 1965, at 2:00 o'clock P. M, and is duly recorded.

Rufus E. Deering
Register of Deeds

[signature]
Deputy

G-2 1-11

This digital plat record accurately reproduces in all details the original plat filed with the Sedgwick County Register of Deeds. Digitized under the supervision of Register of Deeds Bill Meek by Sedgwick County Geographic Information Systems.

Bill Meek, Register of Deeds
Digitized reproduction of original signature

C:\SC2000\WORK\COLEMAN-DETWEILER.DWG

MANHOLE FRAME AND COVER DETAIL

ADOPTED AS STANDARD DESIGN BY
CITY OF WICHITA, KANSAS

MANHOLE COVER
Weight = 180 Lbs.

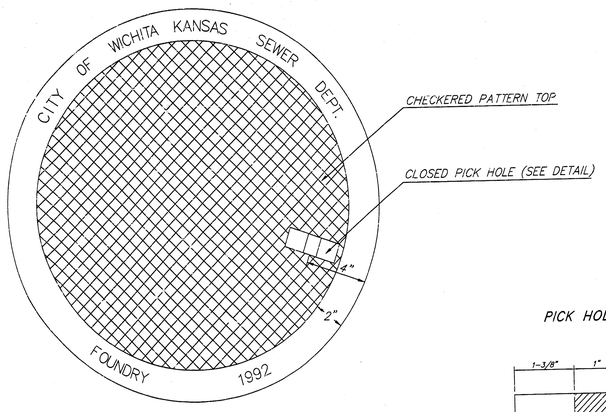

TOP VIEW

PICK HOLE DETAIL

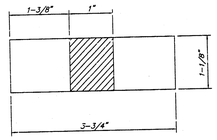

TOP VIEW

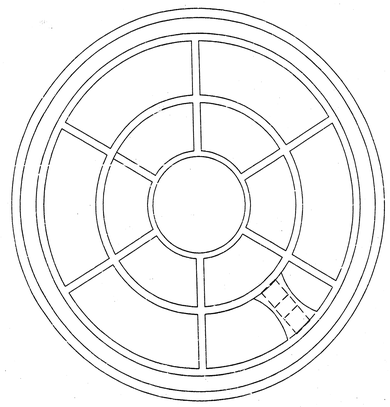

BOTTOM VIEW

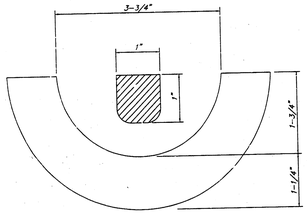

SECTION VIEW

MANHOLE FRAME
Weight = 240 Lbs.

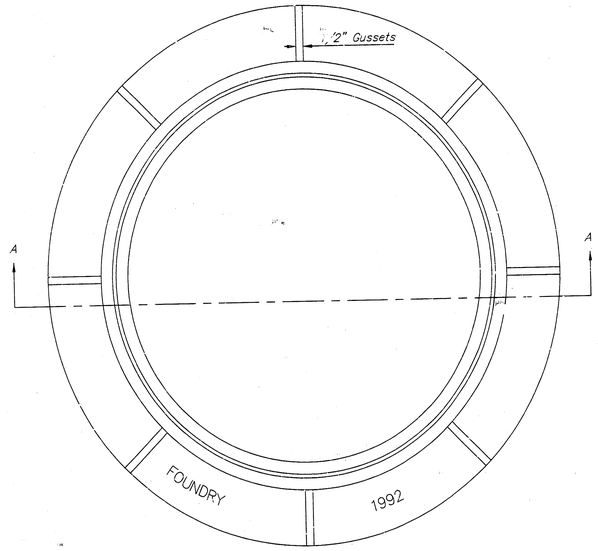

TOP VIEW

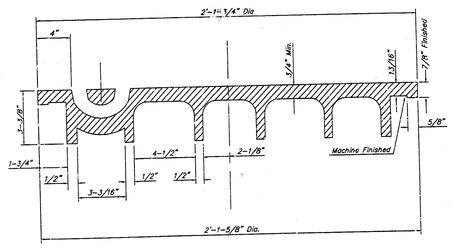

SECTION VIEW

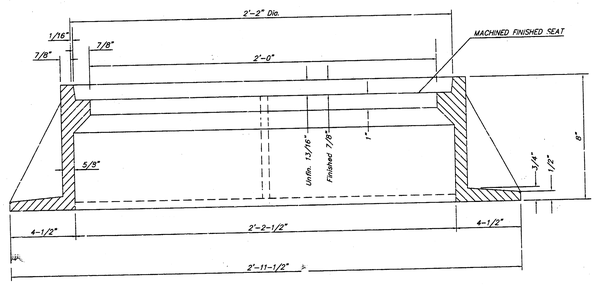

SECTION A-A

GENERAL NOTES

MANHOLE CASTINGS SHALL BE MANUFACTURED USING GOOD QUALITY GRAY IRON CONFORMING TO CLASS 30 OF A.S.T.M. DESIGNATION A-48. DIMENSIONS AND WEIGHTS SHOWN ON THE DETAILED DRAWINGS SHALL BE CONSIDERED AS MINIMUM REQUIREMENTS AND ANY DEVIATIONS FROM THE DIMENSIONS SHOWN MUST BE SPECIFICALLY APPROVED. THE FINISHED CASTINGS SHALL BE OF UNIFORM QUALITY, FREE FROM BLOWHOLES, POROSITY, HARD SPOTS, SHRINKAGE DISTORTIONS OR OTHER DEFECTS.

MANHOLE CASTINGS SHALL BE COATED WITH AN ASPHALT PAINT RESULTING IN A SMOOTH, TOUGH AND TENACIOUS COATING WHICH IS NOT BRITTLE OR TACKY.

MANHOLE CASTINGS SHALL BE MANUFACTURED SUCH THAT A COVER MANUFACTURED BY ANY ONE FOUNDRY WILL FIT INTERCHANGEABLY INTO A FRAME MANUFACTURED BY ANOTHER FOUNDRY AND STILL MEET ALLOWABLE CLEARANCES AND NON-ROCKING REQUIREMENTS. THIS WILL REQUIRE MANUFACTURING OF THE MATCHING FACES ON THE COVER AND THE FRAME TO CLOSE TOLERANCES.

THE OUTSIDE CIRCUMFERENCE OF THE VERTICAL FACE OF THE COVER AND THE INSIDE CIRCUMFERENCE OF THE VERTICAL FACE IN THE FRAME RECESS SHALL BE MANUFACTURED TO TOLERANCES SUCH THAT THE CLEARANCE BETWEEN THE COVER AND FRAME WILL NOT EXCEED 1/8" AT ANY POINT AROUND THE CIRCUMFERENCE OF THE COVER. THE SEATING SURFACES BETWEEN THE COVER AND FRAME SHALL BE MACHINED SUCH AS THESE SURFACES SHALL MAKE FULL CONTACT FOR THEIR FULL CIRCUMFERENCE TO PRECLUDE THE COVER FROM ROCKING IN THE FRAME.

THE MANHOLE FRAME AND COVER SHALL BE MARKED WITH LETTERING INDICATING THE NAME OF THE MANUFACTURER AND THE YEAR WHEN THE COVER OR FRAME WAS CAST. THE COVER SHALL BE FURTHER IDENTIFIED WITH REGARDS TO OWNERSHIP USING LETTERS AT LEAST 1 INCH IN HEIGHT. THIS IDENTIFICATION SHALL BE "CITY OF WICHITA SEWER DEPARTMENT". THE WORD DEPARTMENT MAY BE ABBREVIATED. THE TEXTURE OF THE TOP SURFACE OF THE COVER SHALL BE MANUFACTURED IN A CHECKERED PATTERN DESIGN AS INDICATED ON THE DRAWINGS. SMOOTH BLOCKOUTS SHALL BE UTILIZED TO HIGHLIGHT THE LETTERING ON THE COVER SURFACE. THE TOTAL AREA OF SMOOTH SURFACE BLOCKOUT SHALL NOT EXCEED THE AREA AS INDICATED ON THE DRAWING. POSITIONING OF SMOOTH BLOCKOUTS AND LETTERING MAY VARY FROM THAT SHOWN ON THE DETAILED DRAWING.

THE CITY OF WICHITA
CITY ENGINEER'S OFFICE
CITY HALL - SEVENTH FLOOR
455 NORTH MAIN STREET
WICHITA, KANSAS 67202
(316) 268-4501
(316) 268-4114 FAX

MANHOLE FRAME AND COVER

M. E. LINDEBAK P.E. - CITY ENGINEER

PROJECT NUMBER	INDEX CODE
1184 PPS	607861
DATE	SHEET 4 OF 5
MAR 96	

SEWER APPURTENANCES DETAILS

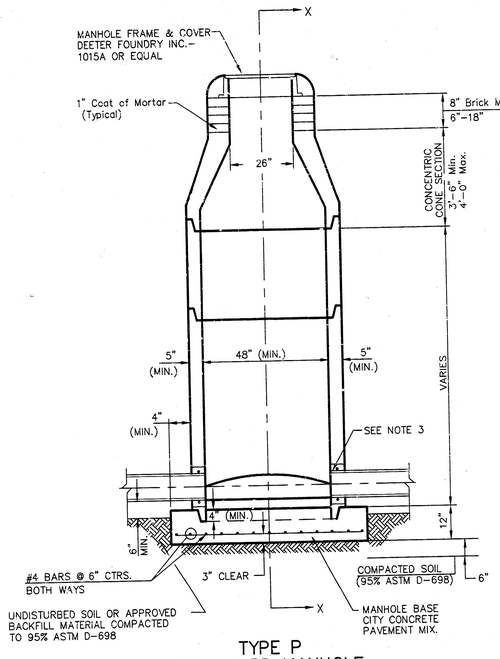

TYPE P
STANDARD MANHOLE

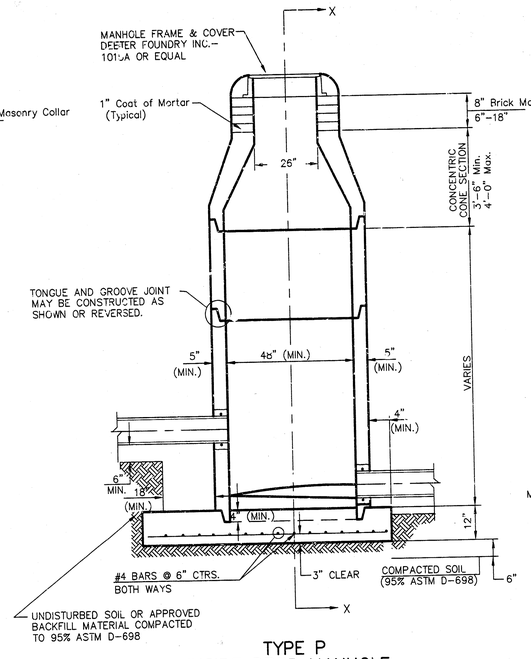

TYPE P
INSIDE DROP MANHOLE

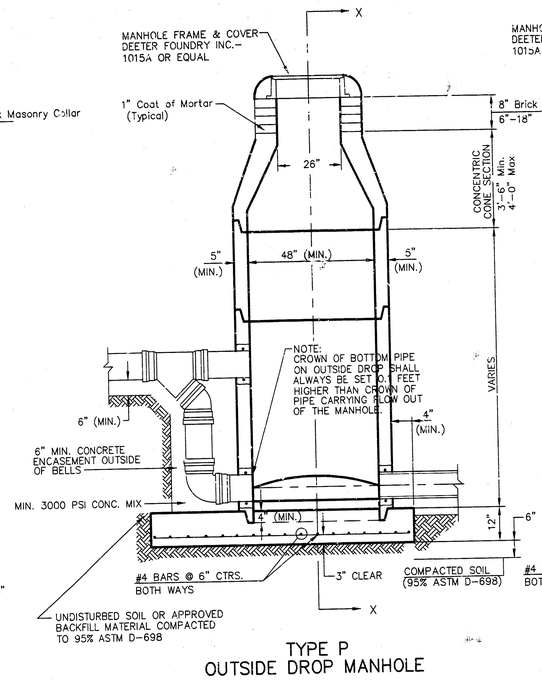

TYPE P
OUTSIDE DROP MANHOLE

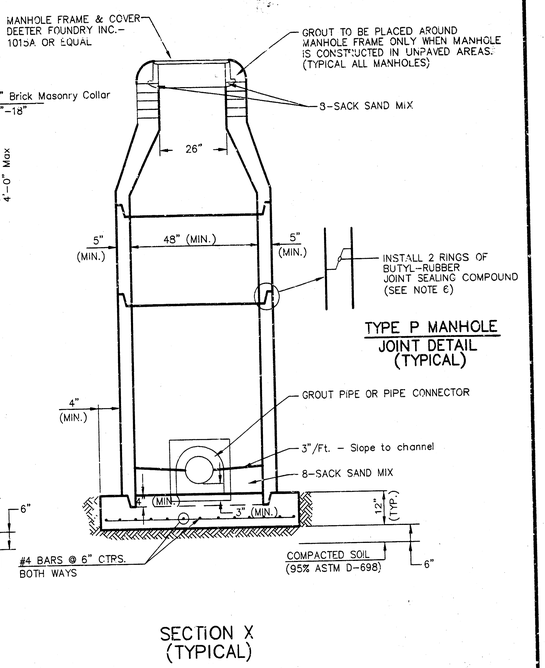

SECTION X
(TYPICAL)

GENERAL NOTES

PRECAST MANHOLE NOTES

1. ALL PRECAST CONCRETE MANHOLE SECTIONS SHALL CONFORM TO THE LATEST REVISIONS OF A.S.T.M. C478 AS MODIFIED BY THE SPECIFICATIONS.
2. NON–SHRINK GROUT SHALL BE NON–METALLIC TYPE.
3. APPROVED FLEXIBLE WATERSTOP GASKETS SHALL BE INSTALLED TO JOIN THE SEWER TO THE MANHOLE WALL WHEN A.B.S. COMPOSITE PIPE OR P.V.C. PIPE IS USED. FOR OTHER TYPES OF PIPE THE SEWER SHALL BE GROUTED IN PLACE WITH NON–SHRINK GROUT. THE SEWER PIPE SHALL BE SUPPORTED WITH CONCRETE ENCASEMENT A MINIMUM OF 3 FEET FROM THE MANHOLE WALL AND TO THE FIRST JOINT FOR V.C.P. SUCH THAT THE JOINT REMAINS FLEXIBLE.
4. ALL INSIDE SURFACES OF THE CONCRETE MANHOLE WHICH WOULD BE EXPOSED TO SEWER GAS SHALL BE COATED WITH 2 COATS TNEMEC SERIES 66 HI–BUILD EPOXOLINE, DRY THICKNESS OF 8 MILS (MIN.)
5. EXTERIOR MANHOLE WALLS SHALL BE COATED WITH 1 COAT M. CARMA 633 BITUMINOUS COATING.
6. JOINT SEALING COMPOUND SHALL BE KENT SEAL NO. 2 OR APPROVED EQUAL.
7. PRECAST MANHOLES SHALL BE SET AT LEAST 4 INCHES INTO THE MANHOLE BASE.
8. TOP OF MANHOLE FLOOR SLAB SHALL BE AT LEAST 3 INCHES BELOW THE FLOW LINE OF THE OUTLET PIPE TO INSURE SUFFICIENT MINIMUM THICKNESS OF SHAPED INVERT.
9. LIFTING HOLES SHALL BE FILLED WITH NON–SHRINK GROUT AND THE INTERIOR SURFACE COATED AS SPECIFIED.
10. MORTAR USED IN MASONRY CONSTRUCTION SHALL CONTAIN 8 SACKS OF CEMENT PER CUBIC YARD. CONCRETE USED IN MANHOLE BASES SHALL CONFORM TO THE REQUIREMENTS OF CONCRETE FOR CONCRETE PAVEMENT CONSTRUCTION AS SPECIFIED IN THE CITY STANDARD PAVING SPECIFICATIONS USING CITY CONCRETE PAVEMENT MIX WITHOUT AIR ENTRAINING ADMIXTURE. MORTAR SHALL BE PLACED AROUND THE MANHOLE RING AS SHOWN ON THE DRAWINGS WHEN MANHOLES ARE CONSTRUCTED IN UNPAVED AREAS. MANHOLES CONSTRUCTED WHERE PIPE SIZES ARE SMALLER THAN 24" SHALL HAVE AN INSIDE DIAMETER OF 4'. MANHOLES CONSTRUCTED WHERE PIPE SIZES ARE 24" OR LARGER SHALL HAVE AN INSIDE DIAMETER OF 5'. COMPLETED MANHOLE SHALL BE WITHOUT LEAKS AND WATER TIGHT.
11. REINFORCING STEEL SHALL BE INSTALLED IN THE MANHOLE BASES AND SHALL CONSIST OF NO. 4 BARS PLACED ON 6" CENTERS IN BOTH DIRECTIONS. THE MANHOLE BASE REINFORCEMENT SHALL BE PLACED AT LEAST 3" ABOVE THE BOTTOM OF THE MANHOLE BASE. ALL COSTS FOR FURNISHING AND INSTALLING REINFORCING STEEL SHALL BE INCLUDED IN THE UNIT PRICE BID FOR THE MANHOLE.
12. OPENINGS SHALL BE CUT INTO THE MANHOLE WALL WHEN OUTSIDE DROPS ARE CONSTRUCTED ON EXISTING MANHOLES. SUCH OPENINGS CUT INTO EXISTING MANHOLES SHALL BE AS SMALL AS PRACTICAL TO FACILITATE INSTALLING AND GROUTING THE NEW PIPE IN PLACE. WATERSTOP GASKETS SHALL BE USED WITH P.V.C. AND A.B.S. COMPOSITE PIPE. THE NEW PIPE SHALL BE GROUTED INTO THE OPENING USING AN APPROVED NONSHRINK GROUT FOR THE FULL MANHOLE WALL THICKNESS. THE EXTERIOR OF THE COMPLETED CONNECTION SHALL BE SEALED WITH AN APPROVED BITUMINOUS COATING SUCH THAT THE CONNECTION WILL BE WATER TIGHT. FLOOR OF MANHOLE SHALL BE MODIFIED TO FORM NEW FLOW CHANNEL FOR THE NEW CONNECTION AS INDICATED BY THE DRAWING. THIS WORK, INCLUDING MODIFICATION OF MANHOLE FLOOR, SHALL BE PAID FOR AT THE UNIT PRICE BID FOR OUTSIDE DROP STACK CONSTRUCTED ON EXISTING MANHOLE.
13. THE FLOORS OF ALL MANHOLES SHALL BE SHAPED WITH FLOW CHANNELS SUCH THAT THE MANHOLES WILL BE SELF CLEANING AND FREE OF AREAS WHERE SOLIDS COULD BE DEPOSITED AS SEWAGE FLOWS THROUGH THE MANHOLE FROM ALL INLET PIPES TO THE OUTLET PIPE. FLOW CHANNELS SHALL BE FORMED TO MATCH THE BOTTOM HALVES OF THE INFLOWING PIPES AND THE OUTFLOWING PIPE AS SHOWN BY THE DRAWINGS EXCEPT FOR INSIDE DROP MANHOLES. FLOW CHANNELS FOR INSIDE DROP MANHOLES SHALL BE CONSTRUCTED AS INDICATED BY THE DRAWING. MANHOLE FLOORS SHALL HAVE SLOPES OF 3 INCHES PER FOOT IN THE AREAS OUTSIDE OF THE FLOW CHANNELS SLOPED TOWARD THE FLOW CHANNELS. PIPES LAID THROUGH MANHOLES SHALL HAVE THE TOP HALF REMOVED TO NEAT LINES FOR THE FULL INSIDE DIAMETER OF THE MANHOLE. MANHOLE FLOORS SHALL THEN BE SHAPED AROUND THE BOTTOM HALF OF THE PIPE WHICH FORMS THE FLOW CHANNEL.
14. PIPES INSTALLED WITHIN THE EXCAVATION MADE FOR THE MANHOLE SHALL BE CRADLED WITH CONCRETE TO THE LIMITS OF THE MANHOLE EXCAVATION. WHEN CLAY PIPE IS USED, THE CRADLE SHALL EXTEND TO THE FIRST JOINT OUTSIDE THE MANHOLE. THE CRADLE SHALL BE TERMINATED AT THE CLAY PIPE JOINT IN A MANNER WHICH WILL MAINTAIN THE FLEXIBILITY OF THE JOINT. COST OF CRADLE WITHIN MANHOLE EXCAVATION OR TO CLAY PIPE JOINTS ADJACENT TO MANHOLE SHALL BE INCLUDED IN THE UNIT PRICE BID FOR THE MANHOLE.
15. MANHOLE COVER CASTINGS AND MANHOLE FRAME CASTINGS SHALL CONFORM TO THE REQUIREMENTS AS INDICATED IN THE STANDARD SPECIFICATIONS AND AS SHOWN IN THE STANDARD DETAIL DRAWING.
16. THE VERTICAL DROP IN INSIDE DROP MANHOLES SHALL NOT EXCEED 2' FOR INFLOWING PIPES SIZED 12" OR SMALLER AND 2' FOR INFLOWING PIPES LARGER THAN 12". THE CROWNS OF INFLOWING PIPES SHALL NEVER BE SET LOWER THAN THE CROWN OF THE OUTFLOWING PIPE.
17. STANDARD MANHOLES AND STANDARD INSIDE DROP MANHOLES SHALL BE BID AS STANDARD MANHOLES FOR THE TYPE AND DIAMETER INDICATED. OUTSIDE DROP MANHOLES SHALL BE BID AS STANDARD OUTSIDE DROP MANHOLES FOR THE TYPE AND DIAMETER INDICATED. ALL MANHOLE DIAMETERS WILL BE 4' UNLESS INDICATED OTHERWISE.
18. A BRICK MASONRY COLLAR SHALL BE INSTALLED BETWEEN THE CAST IRON FRAME AND THE CONCENTRIC CONE. THE COLLAR WILL HAVE 8" WALLS AND A VERTICAL HEIGHT OF 6" MINIMUM AND 18" MAXIMUM. A 1" COAT OF MORTAR WILL BE PLASTERED ON THE OUTSIDE OF THE COLLAR. THE USE OF PRE–CAST CONCRETE SPACERS FOR MANHOLE TOP ADJUSTMENT IS ALSO ALLOWED.

THE CITY OF WICHITA
CITY ENGINEER'S OFFICE
CITY HALL – SEVENTH FLOOR
455 NORTH MAIN STREET
WICHITA, KANSAS 67202
(316) 268–4501
(316) 268–4114 FAX

STANDARD TYPE 'P' MANHOLES

M. E. LINDEBAK P.E. – CITY ENGINEER

PROJECT NUMBER	INDEX CODE
1184 PPS	607061
DATE: MAR 96	SHEET 5 OF 5

Ie 03 01 18