SANITARY SEWER TO SERVE

COMOTARA INDUSTRIAL PARK FOURTH ADDITION

Lots 31 &32

Private Project Number

1116 PPS (607861)

CITY OF WICHITA, KANSAS

Michael E. Lindebak, P.E. City Engineer

May 2001

Index

Cover / Plan / Profile Sheet	1
Manhole Detail	2
Manhole Frame & Cover Detail	3
Copy Of Plat	4

Location Map

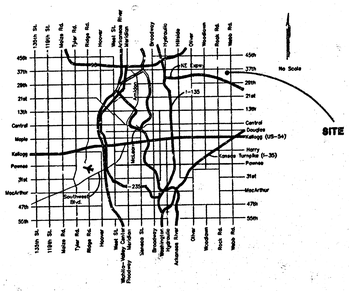
No Scale
SITE
I-135
Southwest Blvd.
Central
Douglas
Kellogg (US-54)
Harry
Kellogg (I-35)
Pawnee
Maple
Sedgwick
Broadway
Hydraulic
Meridian
Grove
Hillside
Oliver
Woodlawn
Rock Rd.
West St.
Webb Rd.
Tyler Rd.
Hoover
Ridge Rd.
Greenwich
Andover Rd.
Boeing
Oliver
Woodlawn
Rock Rd.
West St.
Webb Rd.
Tyler Rd.
Hoover
Ridge Rd.
Greenwich
Andover Rd.
Boeing
Meridian
Broadway
Hydraulic
Sedgwick
Maple
Pawnee
Kellogg
Central
Douglas
Harry
Kellogg (I-35)
Southwest Blvd.
I-135
Maple
Pawnee
Kellogg
Central
Douglas
Harry
Kellogg (US-54)

SEWER APPURTENANCES DETAILS

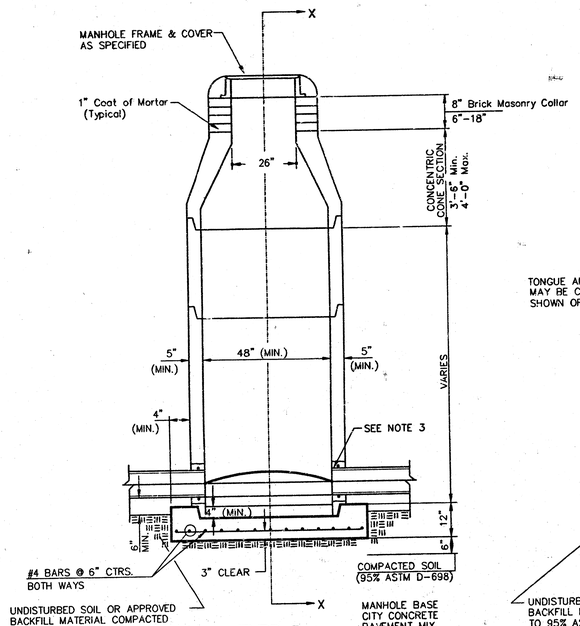

TYPE P
STANDARD MANHOLE

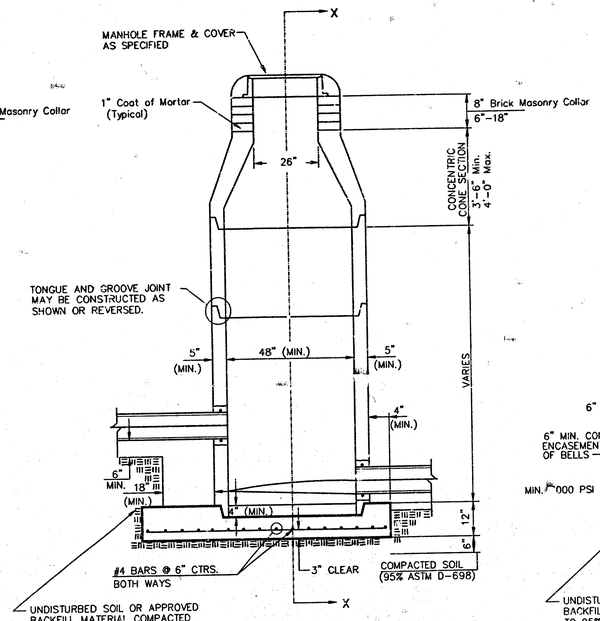

TYPE P
INSIDE DROP MANHOLE

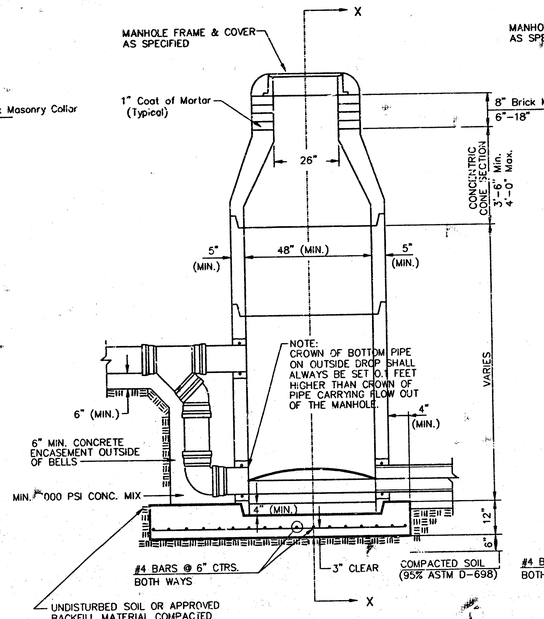

TYPE P
OUTSIDE DROP MANHOLE

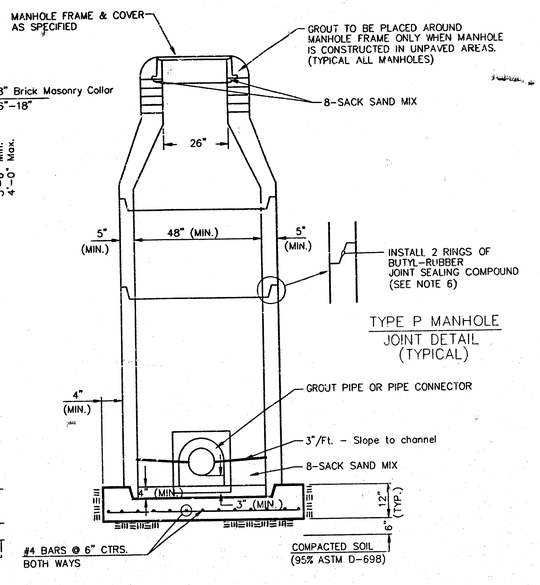

SECTION X
(TYPICAL)

GENERAL NOTES

PRECAST MANHOLE NOTES

1. ALL PRECAST CONCRETE MANHOLE SECTIONS SHALL CONFORM TO THE LATEST REVISIONS OF A.S.T.M. C478 AS MODIFIED BY THE SPECIFICATIONS.
2. NON-SHRINK GROUT SHALL BE NON-METALLIC TYPE.
3. APPROVED FLEXIBLE WATERSTOP GASKETS SHALL BE INSTALLED TO JOIN THE SEWER TO THE MANHOLE WALL WHEN A.B.S. COMPOSITE PIPE OR P.V.C. PIPE IS USED. FOR OTHER TYPES OF PIPE THE SEWER SHALL BE GROUTED IN PLACE WITH NON-SHRINK GROUT. THE SEWER PIPE SHALL BE SUPPORTED WITH CONCRETE ENCASEMENT A MINIMUM OF 3 FEET FROM THE MANHOLE WALL AND TO THE FIRST JOINT FOR V.C.P. SUCH THAT THE JOINT REMAINS FLEXIBLE.
4. ALL INSIDE SURFACES OF THE CONCRETE MANHOLE WHICH WOULD BE EXPOSED TO SEWER GAS SHALL BE COATED WITH 2 COATS TNEMEC SERIES 66 HI-BUILD EPOXOLINE, DRY THICKNESS OF 8 MILS (MIN.)
5. EXTERIOR MANHOLE WALLS SHALL BE COATED WITH 1 COAT MOBILARMA 633 BITUMINOUS COATING.
6. JOINT SEALING COMPOUND SHALL BE KENT SEAL NO. 2 OR APPROVED EQUAL.
7. PRECAST MANHOLES SHALL BE SET AT LEAST 4 INCHES INTO THE MANHOLE BASE.
8. TOP OF MANHOLE FLOOR SLAB SHALL BE AT LEAST 3 INCHES BELOW THE FLOW LINE OF THE OUTLET PIPE TO INSURE SUFFICIENT MINIMUM THICKNESS OF SHAPED INVERT.
9. LIFTING HOLES SHALL BE FILLED WITH NON-SHRINK GROUT AND THE INTERIOR SURFACE COATED AS SPECIFIED.
10. MORTAR USED IN MASONRY CONSTRUCTION SHALL CONTAIN 8 SACKS OF CEMENT PER CUBIC YARD. CONCRETE USED IN MANHOLE BASES SHALL CONFORM TO THE REQUIREMENTS OF CONCRETE FOR CONCRETE PAVEMENT CONSTRUCTION AS SPECIFIED IN THE CITY STANDARD PAVING SPECIFICATIONS USING CITY CONCRETE PAVEMENT MIX WITHOUT AIR ENTRAINING ADMIXTURE. MORTAR SHALL BE PLACED AROUND THE MANHOLE RING AS SHOWN ON THE DRAWINGS WHEN MANHOLES ARE CONSTRUCTED IN UNPAVED AREAS. MANHOLES CONSTRUCTED WHERE PIPE SIZES ARE SMALLER THAN 24" SHALL HAVE AN INSIDE DIAMETER OF 4'. MANHOLES CONSTRUCTED WHERE PIPE SIZES ARE 24" OR LARGER SHALL HAVE AN INSIDE DIAMETER OF 5'. COMPLETED MANHOLE SHALL BE WITHOUT LEAKS AND WATER TIGHT.
11. REINFORCING STEEL SHALL BE INSTALLED IN THE MANHOLE BASES AND SHALL CONSIST OF NO. 4 BARS PLACED ON 6" CENTERS IN BOTH DIRECTIONS. THE MANHOLE BASE REINFORCEMENT SHALL BE PLACED AT LEAST 3" ABOVE THE BOTTOM OF THE MANHOLE BASE. ALL COSTS FOR FURNISHING AND INSTALLING REINFORCING STEEL SHALL BE INCLUDED IN THE UNIT PRICE BID FOR THE MANHOLE.
12. OPENINGS SHALL BE CUT INTO THE MANHOLE WALL WHEN OUTSIDE DROPS ARE CONSTRUCTED ON EXISTING MANHOLES. SUCH OPENINGS CUT INTO EXISTING MANHOLES SHALL BE AS SMALL AS PRACTICAL TO FACILITATE INSTALLING AND GROUTING THE NEW PIPE IN PLACE. WATERSTOP GASKETS SHALL BE USED WITH P.V.C. AND A.B.S. COMPOSITE PIPE. THE NEW PIPE SHALL BE GROUTED INTO THE OPENING USING AN APPROVED NON-SHRINK GROUT FOR THE FULL MANHOLE WALL THICKNESS. THE EXTERIOR OF THE COMPLETED CONNECTION SHALL BE SEALED WITH AN APPROVED BITUMINOUS COATING SUCH THAT THE CONNECTION WILL BE WATER TIGHT. FLOOR OF MANHOLE SHALL BE MODIFIED TO FORM NEW FLOW CHANNEL FOR THE NEW CONNECTION AS INDICATED BY THE DRAWING. THIS WORK, INCLUDING MODIFICATION OF MANHOLE FLOOR, SHALL BE PAID FOR AT THE UNIT PRICE BID FOR OUTSIDE DROP STACK CONSTRUCTED ON EXISTING MANHOLE.
13. THE FLOORS OF ALL MANHOLES SHALL BE SHAPED WITH FLOW CHANNELS SUCH THAT THE MANHOLES WILL BE SELF CLEANING AND FREE OF AREAS WHERE SOLIDS COULD BE DEPOSITED AS SEWAGE FLOWS THROUGH THE MANHOLE FROM ALL INLET PIPES TO THE OUTLET PIPE. FLOW CHANNELS SHALL BE FORMED TO MATCH THE BOTTOM HALVES OF THE INFLOWING PIPES AND THE OUTFLOWING PIPE AS SHOWN BY THE DRAWINGS EXCEPT FOR INSIDE DROP MANHOLES. FLOW CHANNELS FOR INSIDE DROP MANHOLES SHALL BE CONSTRUCTED AS INDICATED BY THE DRAWING. MANHOLE FLOORS SHALL HAVE SLOPES OF 3 INCHES PER FOOT IN THE AREAS OUTSIDE OF THE FLOW CHANNELS SLOPED TOWARD THE FLOW CHANNELS. PIPES LAID THROUGH MANHOLES SHALL HAVE THE TOP HALF REMOVED TO NEAT LINES FOR THE FULL INSIDE DIAMETER OF THE MANHOLE. MANHOLE FLOORS SHALL THEN BE SHAPED AROUND THE BOTTOM HALF OF THE PIPE WHICH FORMS THE FLOW CHANNEL.
14. PIPES INSTALLED WITHIN THE EXCAVATION MADE FOR THE MANHOLE SHALL BE CRADLED WITH CONCRETE TO THE LIMITS OF THE MANHOLE EXCAVATION. WHEN CLAY PIPE IS USED, THE CRADLE SHALL EXTEND TO THE FIRST JOINT OUTSIDE THE MANHOLE. THE CRADLE SHALL BE TERMINATED AT THE CLAY PIPE JOINT IN A MANNER WHICH WILL MAINTAIN THE FLEXIBILITY OF THE JOINT. COST OF CRADLE WITHIN MANHOLE EXCAVATION OR TO CLAY PIPE JOINTS ADJACENT TO MANHOLE SHALL BE INCLUDED IN THE UNIT PRICE BID FOR THE MANHOLE.
15. MANHOLE COVER CASTINGS AND MANHOLE FRAME CASTINGS SHALL CONFORM TO THE REQUIREMENTS AS INDICATED IN THE STANDARD SPECIFICATIONS AND AS SHOWN IN THE STANDARD DETAIL DRAWING.
16. THE VERTICAL DROP IN INSIDE DROP MANHOLES SHALL NOT EXCEED 2' FOR INFLOWING PIPES SIZED 12" OR SMALLER AND 2' FOR INFLOWING PIPES LARGER THAN 12". THE CROWNS OF INFLOWING PIPES SHALL NEVER BE SET LOWER THAN THE CROWN OF THE OUTFLOWING PIPE.
17. STANDARD MANHOLES AND STANDARD INSIDE DROP MANHOLES SHALL BE BID AS STANDARD MANHOLES FOR THE TYPE AND DIAMETER INDICATED. OUTSIDE DROP MANHOLES SHALL BE BID AS STANDARD OUTSIDE DROP MANHOLES FOR THE TYPE AND DIAMETER INDICATED. ALL MANHOLE DIAMETERS WILL BE 4' UNLESS INDICATED OTHERWISE.
18. A BRICK MASONRY COLLAR SHALL BE INSTALLED BETWEEN THE CAST IRON FRAME AND THE CONCENTRIC CONE. THE COLLAR WILL HAVE 8" WALLS AND A VERTICAL HEIGHT OF 6" MINIMUM AND 18" MAXIMUM. A 1" COAT OF MORTAR WILL BE PLASTERED ON THE OUTSIDE OF THE COLLAR. THE USE OF PRE-CAST CONCRETE SPACERS FOR MANHOLE TOP ADJUSTMENT IS ALSO ALLOWED.

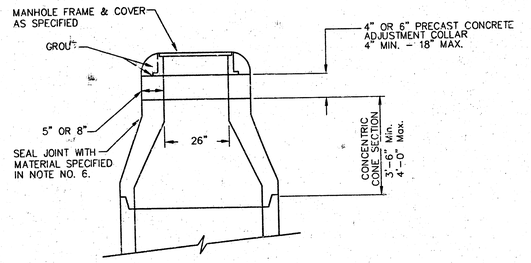

ALTERNATE CONSTRUCTION
IN UNPAVED AREAS

CITY OF WICHITA

STD. MANHOLE DETAILS

SEWER APPURTENANCES

BAUGHMAN COMPANY P.A.

ENGINEERING, SURVEYING, & PLANNING

316-262-7271 • 315 ELLIS • WICHITA, KANSAS 67211

PROJECT NUMBER				SHEET
1116 PPS (607861)				2 OF 4
DESIGN	DRAWN	APPROVED	DATE	SCALE
STAFF	STAFF		05/01	NONE

01-02-E2330
Carlos\Print

MANHOLE FRAME AND COVER DETAIL

ADOPTED AS STANDARD DESIGN BY
CITY OF WICHITA, KANSAS

MANHOLE COVER
Weight = 180 Lbs.

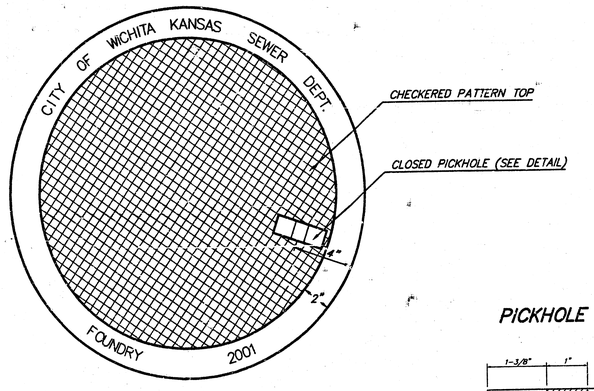

TOP VIEW

PICKHOLE DETAIL

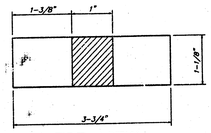

TOP VIEW

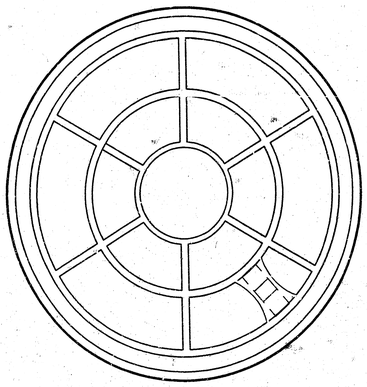

BOTTOM VIEW

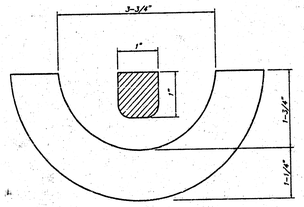

SECTION VIEW

MANHOLE FRAME
Weight = 145 Lbs.

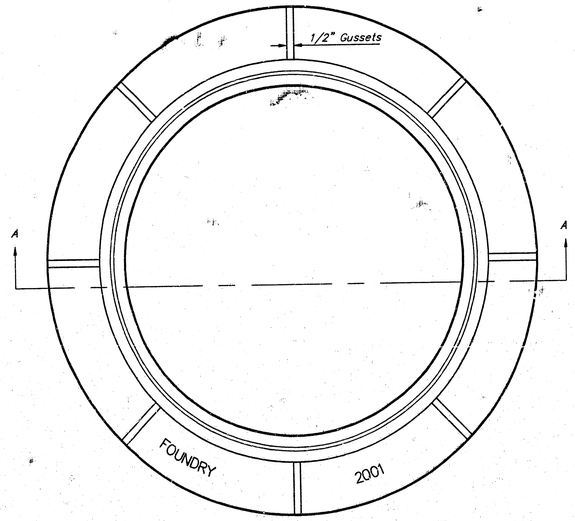

TOP VIEW

GENERAL NOTES

MANHOLE CASTINGS SHALL BE MANUFACTURED USING GOOD QUALITY GRAY IRON CONFORMING TO CLASS 30 OF A.S.T.M. DESIGNATION A-48. DIMENSIONS AND WEIGHTS SHOWN ON THE DETAILED DRAWINGS SHALL BE CONSIDERED AS MINIMUM REQUIREMENTS AND ANY DEVIATIONS FROM THE DIMENSIONS SHOWN MUST BE SPECIFICALLY APPROVED. THE FINISHED CASTINGS SHALL BE OF UNIFORM QUALITY, FREE FROM BLOWHOLES, POROSITY, HARD SPOTS, SHRINKAGE DISTORTIONS OR OTHER DEFECTS.

MANHOLE CASTINGS SHALL BE COATED WITH AN ASPHALT PAINT RESULTING IN A SMOOTH, TOUGH AND TENACIOUS COATING WHICH IS NOT BRITTLE OR TACKY.

MANHOLE CASTINGS SHALL BE MANUFACTURED SUCH THAT A COVER MANUFACTURED BY ANY ONE FOUNDRY WILL FIT INTERCHANGEABLY INTO A FRAME MANUFACTURED BY ANOTHER FOUNDRY AND STILL MEET ALLOWABLE CLEARANCES AND NON-ROCKING REQUIREMENTS. THIS WILL REQUIRE MANUFACTURING OF THE MATCHING FACES ON THE COVER AND THE FRAME TO CLOSE TOLERANCES.

THE OUTSIDE CIRCUMFERENCE OF THE VERTICAL FACE OF THE COVER AND THE INSIDE CIRCUMFERENCE OF THE VERTICAL FACE IN THE FRAME RECESS SHALL BE MANUFACTURED TO TOLERANCES SUCH THAT THE CLEARANCE BETWEEN THE COVER AND FRAME WILL NOT EXCEED 1/8" AT ANY POINT AROUND THE CIRCUMFERENCE OF THE COVER. THE SEATING SURFACES BETWEEN THE COVER AND FRAME SHALL BE MACHINED SUCH AS THESE SURFACES SHALL MAKE FULL CONTACT FOR THEIR FULL CIRCUMFERENCE TO PRECLUDE THE COVER FROM ROCKING IN THE FRAME.

THE MANHOLE FRAME AND COVER SHALL BE MARKED WITH LETTERING INDICATING THE NAME OF THE MANUFACTURER AND THE YEAR WHEN THE COVER OR FRAME WAS CAST. THE COVER SHALL BE FURTHER IDENTIFIED WITH REGARDS TO OWNERSHIP USING LETTERS AT LEAST 1 INCH IN HEIGHT. THIS IDENTIFICATION SHALL BE "CITY OF WICHITA SEWER DEPARTMENT". THE WORD DEPARTMENT MAY BE ABBREVIATED. THE TEXTURE OF THE TOP SURFACE OF THE COVER SHALL BE MANUFACTURED IN A CHECKERED PATTERN DESIGN AS INDICATED ON THE DRAWINGS. SMOOTH BLOCKOUTS SHALL BE UTILIZED TO HIGHLIGHT THE LETTERING ON THE COVER SURFACE. THE TOTAL AREA OF SMOOTH SURFACE BLOCKOUT SHALL NOT EXCEED THE AREA AS INDICATED ON THE DRAWING. POSITIONING OF SMOOTH BLOCKOUTS AND LETTERING MAY VARY FROM THAT SHOWN ON THE DETAILED DRAWING.

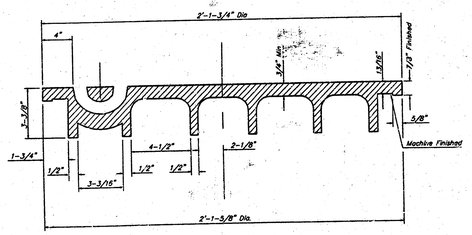

SECTION VIEW

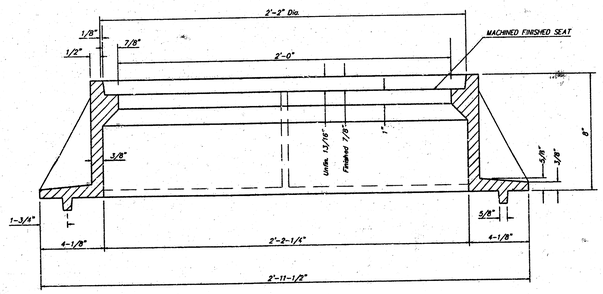

SECTION A-A

MANHOLE FRAME AND COVER DETAIL ADOPTED AS STANDARD DESIGN BY CITY OF WICHITA, KANSAS					02-E930
BAUGHMAN COMPANY P.A. ENGINEERING, SURVEYING, & PLANNING 316-262-7271 • 315 ELLIS • WICHITA, KANSAS 67211					
PROJECT NUMBER 1116 PPS (607861)					SHEET 3 OF 4
DESIGN STAFF	DRAWN STAFF	APPROVED	DATE 05/01	SCALE NONE	

H-1 3-22

FINAL PLAT OF
COMOTARA INDUSTRIAL PARK FOURTH ADDITION

AN ADDITION TO WICHITA, SEDGWICK COUNTY, KANSAS

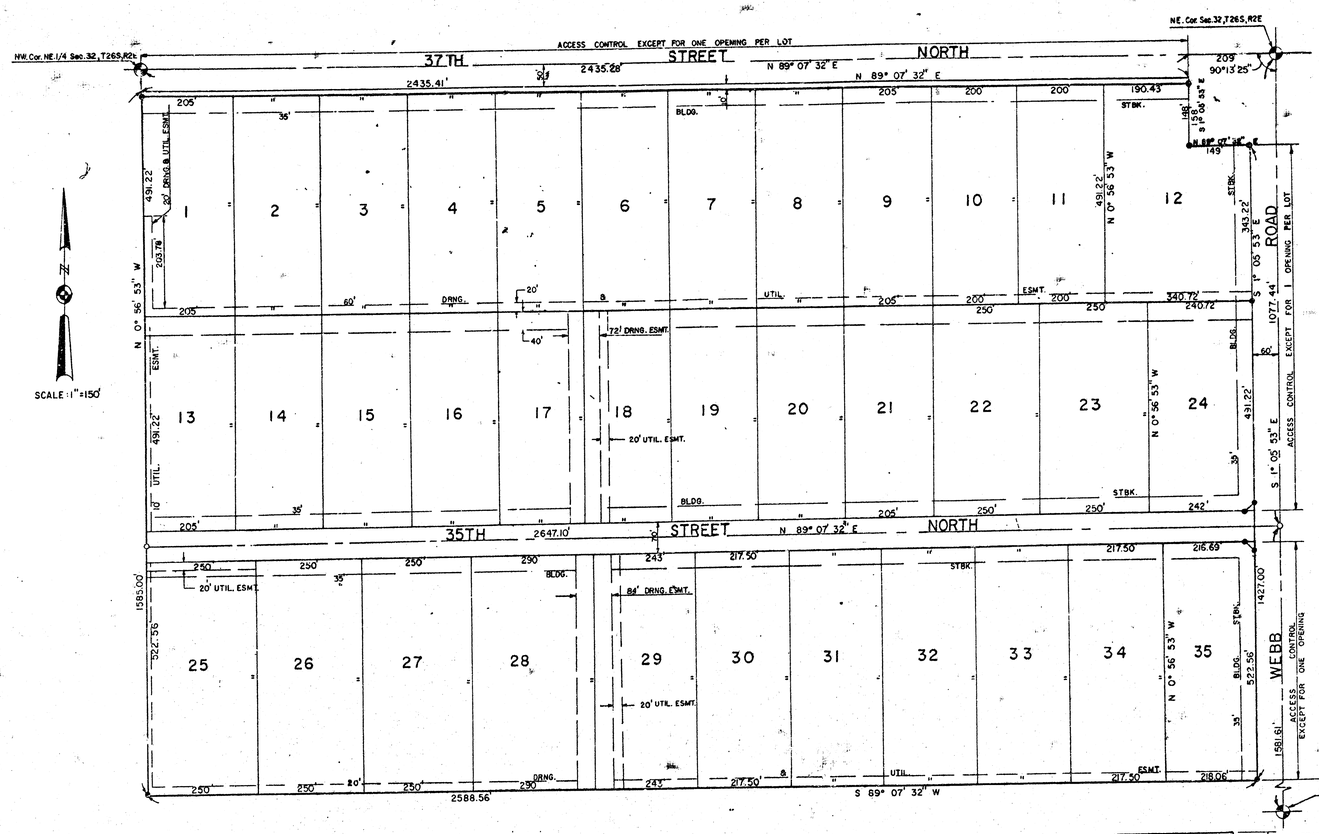

REFILE 41515

I, Steven E. Anderson a Land Surveyor in Kansas, do hereby certify that I have been in responsible charge of surveying and platting of "Comotara Industrial Park Fourth Addition" to Wichita, Sedgwick County, Kansas, into lots and a street, the same being accurately set forth in the accompanying plat and described as follows:

A replat of part of Blocks 3 and 4, Comotara Business Park Addition to Wichita Sedgwick County, Kansas described as follows:

Beginning at a point on the west line of the northeast quarter, Section 32, T 26 S, R 2 E of the 6th P.M., 50.00 feet south of the northwest corner of said quarter; thence east along the south line of 37th Street North bearing N 89° 07' 32" E, 2435.41 feet; thence S 1° 05' 53" E, 158.00 feet; thence N 89° 07' 32" E, 149.00 feet to the west line of Webb Road; thence south along said west line bearing S 1° 05' 53" E, 1427.00 feet; thence S 89° 07' 32" W, 2588.56 feet to the east line of Comotara Industrial Park Second Addition; thence north along said east line bearing N 0° 56' 53" W, 1585.00 feet to the point of beginning. Containing 95.57 acres, more or less.

35th Street, as dedicated in plat of Comotara Business Park Addition, is hereby vacated by virtue of K.S.A. 12-512-B.

I hereby certify that the details of the plat are correct to the best of my knowledge and belief this 27th day of September, 1978.

By: Steven E. Anderson
Steven E. Anderson
Van Doren-Hazard-Stallings
Architects-Engineers
260 North Rock Road
Wichita, Kansas

STEVEN E. ANDERSON REGISTERED LS-668 KANSAS LAND SURVEYOR

Know all men by these presents, that we the undersigned property owners of the land as above set forth in the Land Surveyor's Certificate, have caused the same to be surveyed and platted into lots and a street, the same to be known as "Comotara Industrial Park Fourth Addition" to Wichita, Sedgwick County, Kansas. The street is hereby dedicated to and for the use of the public. Easements for drainage, and construction and maintenance of public utilities, as indicated on the accompanying plat, are hereby granted. All abutter's rights of access across the south line of 37th Street North and across the west line of Rock Road are hereby granted to the City of Wichita, Kansas, provided, however, that the subdivision shall have access to 37th Street North at one location per lot and shall have access to Webb Road at one location per lot.

Wichita Development Company

By: Robert R. Fox
Robert R. Fox
Attorney in Fact for Wichita Development Company

State of Kansas, County of Sedgwick SS:

Be it remembered that on this 27th day of September, 1978 before me, a Notary Public in and for said State and County, came the Wichita Development Company, by Robert R. Fox, Attorney in Fact for Wichita Development Company, to me personally known to be the same person who executed the foregoing instrument of writing and duly acknowledged the execution of the same. In testimony whereof I have hereunto set my hand and affixed my notarial seal the day and year above written.

Carolyn R. Owen Notary Public
Carolyn Owen
My Commission Expires My Appointment Expires May 17, 1981

We, the Citibank, N.A., New York City, New York, mortgagees on the above described property do hereby consent to the plat of "Comotara Industrial Park Fourth Addition".

The Citibank, N.A., New York, New York.

By: Robert R. Fox
Robert R. Fox
Attorney in Fact for Citibank, N.A.

Be it remembered on this 27th day of September, 1978 before me, a Notary Public in and for said State and County, came the Citibank, N.A., New York City, New York, by Robert R. Fox, Attorney in Fact for Citibank, N.A., to me personally known to be the same person who executed the foregoing instrument of writing and duly acknowledged the execution of the same. In testimony whereof, I have hereunto set my hand and affixed my notarial seal the day and year above written.

Carolyn R. Owen, Notary Public
Carolyn R. Owen
My Commission Expires My Appointment Expires May 17, 1981

This plat of "Comotara Industrial Park Fourth Addition" has been submitted to and approved by the Wichita-Sedgwick County Metropolitan Area Planning Commission, Wichita, Kansas.

Dated this 22nd day of June, 1978.

Wichita-Sedgwick County Metropolitan Area Planning Commission

Jerry Gaeddert, Vice-Chairman
Robert A. Lakin, Secretary

This plat approved and all dedications shown hereon, if any, accepted by the City Commission of the City of Wichita, Kansas this 10TH day of OCTOBER, 1978.

Connie A. Peters, Mayor
Donald C. Glick, City Clerk

Entered on transfer record this 16th day of October, 1978.

STEPHEN D WRIGHT ASST., County Clerk

20.00

This plat approved and all dedications shown hereon, if any, accepted by the Board of County Commissioners of Sedgwick County, Kansas this 16th day of October, 1978.

Everett W. Patrick, Chairman
Tom Scott, Commissioner
John Hale, Commissioner
Attest: STEPHEN D WRIGHT ASST., County Clerk

State of Kansas, County of Sedgwick, SS:

This is to certify that this instrument was filed for record in the Register of Deeds Office at 3:00 P.M. on the 16TH day of OCTOBER, 1978.

Bette F. McCart, Register of Deeds
Pat Kettler, Deputy

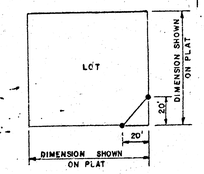

TYPICAL INTERSECTION RIGHT OF WAY DETAILS

#409014

STATE OF KANSAS
SEDGWICK COUNTY SS:

This is to certify that this plat was refiled for record in the office of the Register of Deeds this 27TH day of NOVEMBER, 1978 to change the legal description in the Surveyor's Certificate from "Beginning at the northwest corner of Lot 2, Block 3 of Comotara Business Park Addition" to "Beginning at a point on the west line of the northeast quarter, Section 32, T 26 S, R 2 E of the 6th P.M., 50.00 feet south of the northwest corner of said quarter".

Steven E. Anderson
Steven E. Anderson
VAN DOREN-HAZARD-STALLINGS

Bette F. McCart
Bette F. McCart
Register of Deeds

Pat Kettler
Pat Kettler
Deputy

REFILE 20.00

Restrictive Covenant F-934 pg. 1438
Vacation Order F-911 Pg 799
Vacation Order F-934 Pg 1649

H-1 3-22

18 17 03 02