PRIVATE SANITARY SEWER SYSTEM

TO SERVE LOT 1;
MOBILE MANOR SOUTH ADDITION

PROJECT NO: 895 PPS
INDEX CODE: 607861

APPROVED AS NOTED
BY CITY ENGINEER OF WICHITA

Sanitary Sewers VRH 3/18/99

Storm Sewers _____

Driveway Approaches _____

Water Mains _____

Paving _____

NOTE TO CONTRACTORS

Inspection and testing for this project are to be provided by a Licensed Consulting Engineering Firm under contract with the Owner/Developer. Said inspection to be in accordance with the City of Wichita standard construction engineering practices and certified by a Licensed Professional Engineer. No work shall be performed in dedicated easements or public right-of-way by the Contractor without such inspection, nor shall any work be commenced without written authorization by the City Engineer.

NOTES:

1. Contractor will be required to provide a minimum notice of 48 hours to utility companies prior to starting any excavation as follows:

   Kansas One-Call 687-2470

   The Contractor must notify the following in case of an emergency:

Multimedia	262-4270 or 263-2061
Kansas Gas Service	383-8650
KGE	383-8600
Peoples Natural Gas Company	942-8350 or 263-8161
Southwestern Bell Telephone Company	1-517-2611
City of Wichita Water Department	268-4908
City of Wichita Sewer Maintenance	268-4071

2. Contractor shall not start work on the project until the project inspector is assigned to the project and is present on the site. Any work done without inspection will be required to be uncovered for inspection.
3. Rubble from the removal of miscellaneous structures and excess excavation which is to be wasted shall be disposed of on sites to be provided by the Contractor. These sites shall be approved by the Engineer as to suitability, appearance and site location. Locations that, in the opinion of the Engineer, will leave an unsightly appearance will not be approved.
4. The Contractor shall be responsible for preserving property irons. The Contractor will be required to re-establish any property irons which are damaged or destroyed by his construction operations. Such irons shall be re-established by a licensed land surveyor in accordance with state laws.
5. The Contractor shall be responsible for maintaining continuous flow of sewage through construction. Contractor's proposed method for maintaining sewage flow shall be approved by the Engineer. Cost of maintaining flow of sewage through construction will not be paid for directly and this cost shall be considered as subsidiary to other pay items of work.
6. All construction involving the 8" sewer system shall be in accordance with City of Wichita Standard Specifications dated March 1998.
7. Backfill above a depth of 12" over top of sewer pipe shall be compacted to 95% of standard density.
8. Traffic will not be affected by this project.

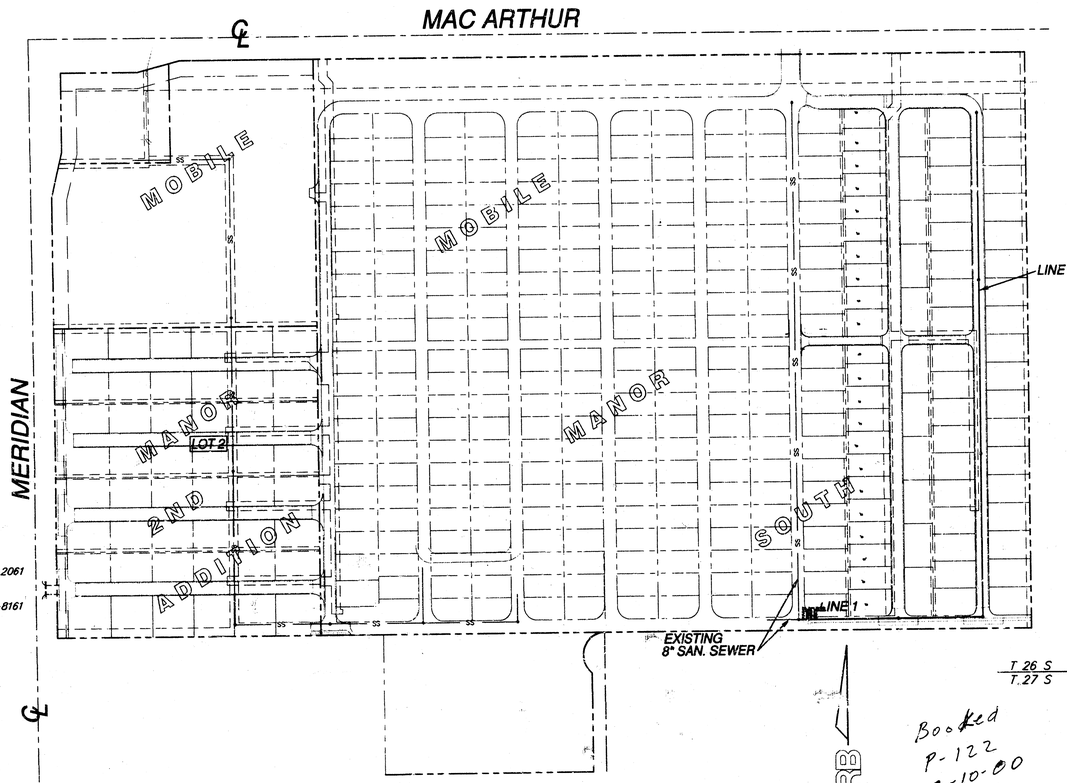

As-Built Plans: 08/23/2000

Inspection firm: Savoy, Ruggles & Bohm Inspector: Tim Kelly

* Note * From Sta. 0+00 to Sta. 4+27.11, including MH @ Sta. 2+16.45, was existing. Project started @ MH sta. 4+27.11.

Material: 1,116.02 l.f. 8" PVC Sewer Pipe, 1-8" Trap, 2-Stubs 2-Shallow Type 'P' MH's, 2-Spec. Shallow Type 'P' MH's

Vac. Tested / Pressure tested: 03/08/2000

Booked
P-122
4-10-00
R.D.L.

Scale 1" = 150'

INDEX OF SHEETS

1. TITLE SHEET
2-3. PLAN PROFILE SHEETS
4. SHALLOW MANHOLES TYPE 'P' AND 'C'

BENCH MARKS:

(CITY DATUM)

1. CITY OF WICHITA DISK AT NW COR. OF MAC ARTHUR ROAD AND MERIDIAN AVE. 53' N AND 51.3' E OF CENTERLINE BOTH. 22' SE OF CTR. FIRE HYDRANT. 24.4' NE OF STREET LIGHT POLE.
   ELEV. 97.46
2. RR SPIKE N. FACE POWER POLE S. SIDE OF MAC ARTHUR ROAD 1ST POLE E. OF MERIDIAN. 175'± EAST OF MERIDIAN
   ELEV. 98.60
3. RR SPIKE S. FACE POWER POLE S. SIDE OF MAC ARTHUR ROAD 812'± WEST OF NE COR. NW 1/4 SEC. 18, T28S, R1E
   ELEV. 97.48

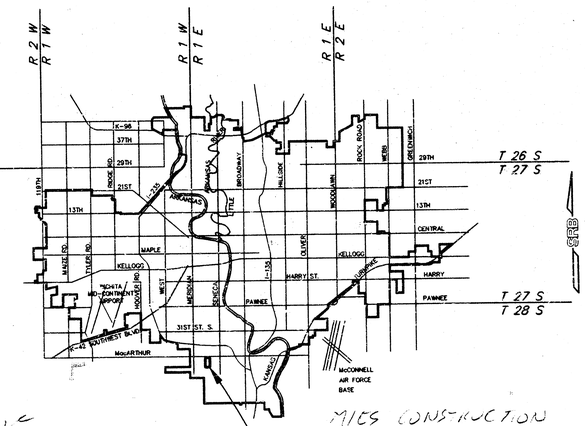

VICINITY MAP

MIES CONSTRUCTION

PROJECT LOCATION

1273X

CITY OF WICHITA, KANSAS

MICHAEL E. LINDEBAK - CITY ENGINEER

SRB 924 NORTH MAIN WICHITA, KANSAS 67203 316-264-8008 FAX 264-4621
SAVOY, RUGGLES & BOHM, P.A.
ENGINEERING & SURVEYING

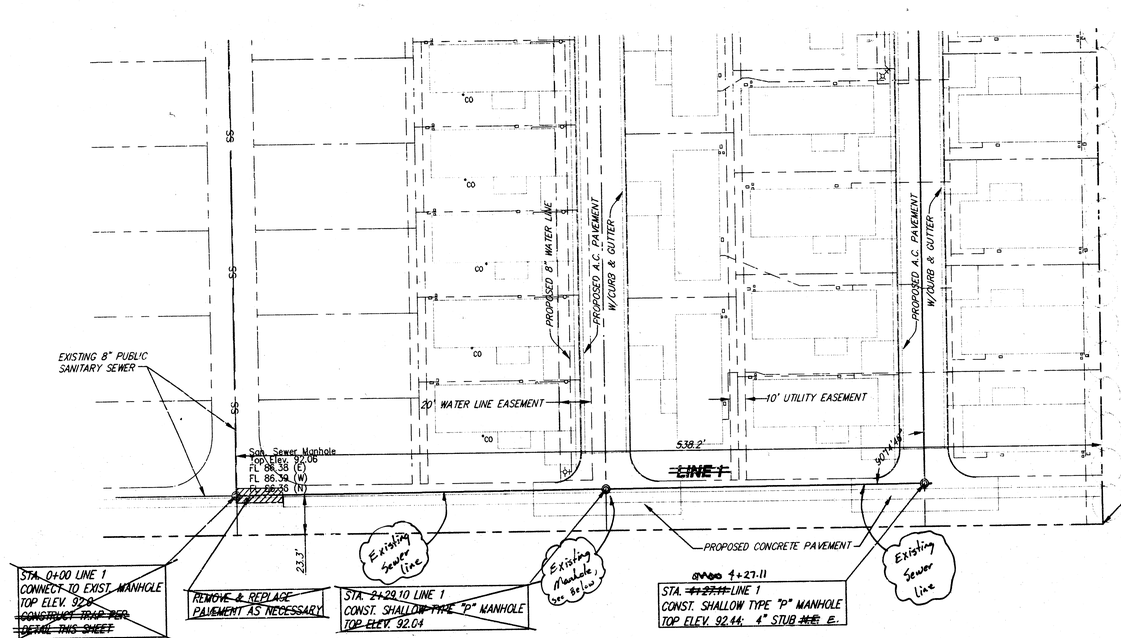

SRB

Scale: PLAN
1" = 40'
PROFILE
1" = 40' Horiz.
1" = 5' Vert.

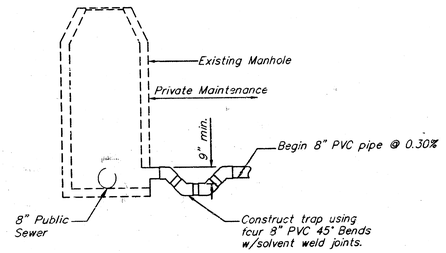

TRAP DETAIL AT MANHOLE

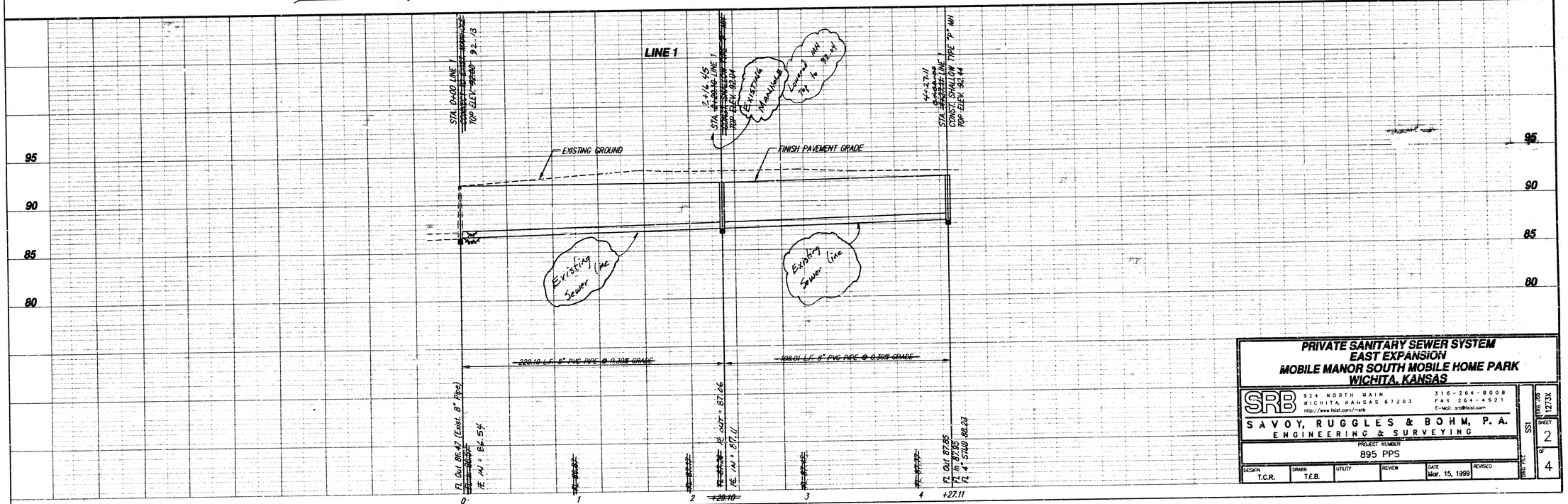

PRIVATE SANITARY SEWER SYSTEM
EAST EXPANSION
MOBILE MANOR SOUTH MOBILE HOME PARK
WICHITA, KANSAS

SRB
924 NORTH MAIN
WICHITA KANSAS 67203
http://www.feist.com/~srb
316-264-8008
FAX 264-4621
E-Mail: srb@feist.com

SAVOY, RUGGLES & BOHM, P.A.
ENGINEERING & SURVEYING

PROJECT NUMBER 895 PPS

DESIGN	DRAWN	UTILITY	REVIEW	DATE	REVISED
T.C.R.	T.E.B.			Mar. 15, 1999	

DWG. TITLE SS1

SRB JOB 1273X

SHEET 2 of 4

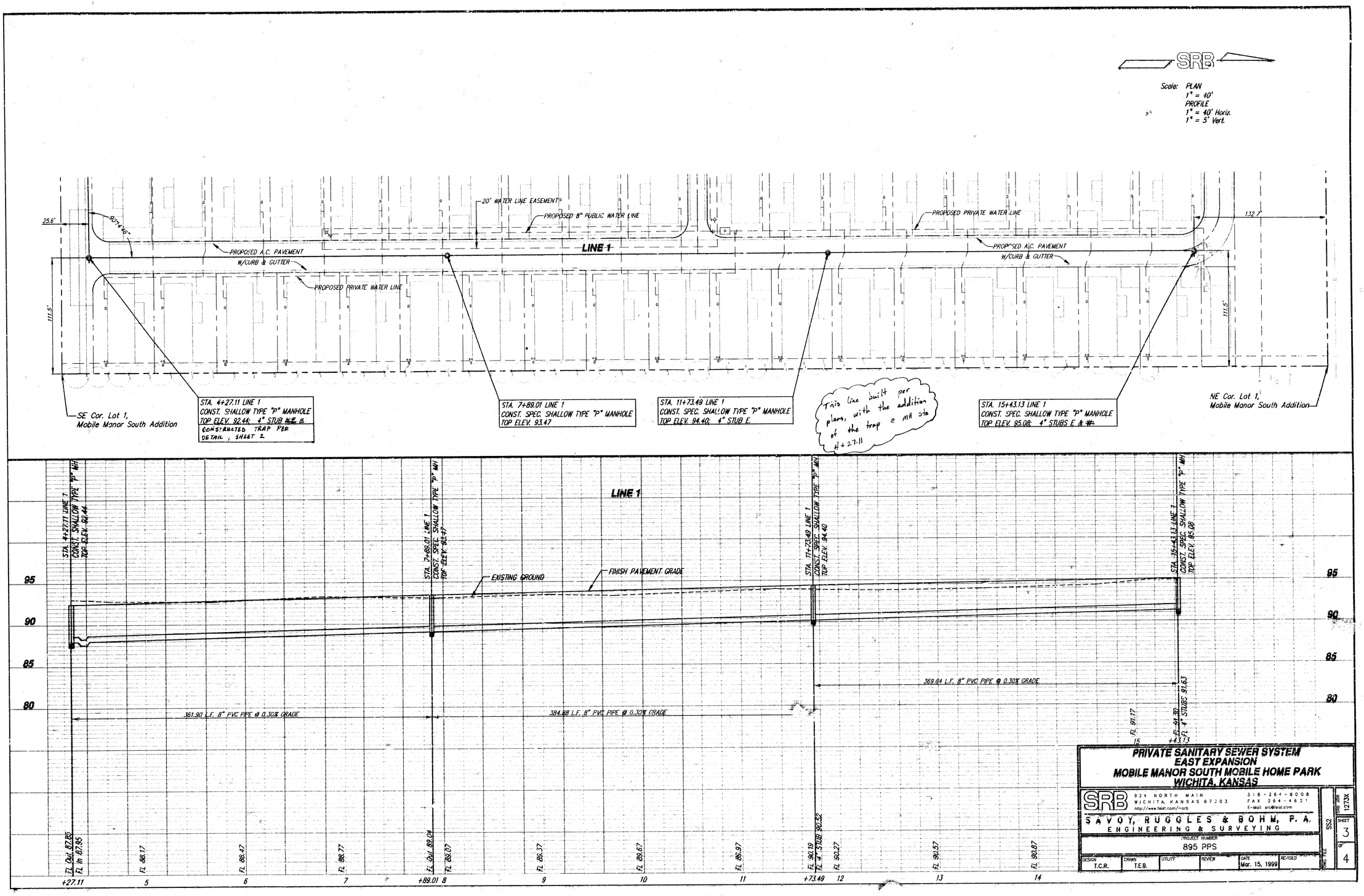

PRIVATE SANITARY SEWER SYSTEM
EAST EXPANSION
MOBILE MANOR SOUTH MOBILE HOME PARK
WICHITA, KANSAS

SRB
924 NORTH MAIN
WICHITA, KANSAS 67203
http://www.feist.com/~srb
316-264-8008
FAX 264-4621
E-Mail: srb@feist.com

SAVOY, RUGGLES & BOHM, P.A.
ENGINEERING & SURVEYING

PROJECT NUMBER
895 PPS

DESIGN	DRAWN	UTILITY	REVIEW	DATE	REVISED
T.C.R.	T.E.B.			Mar. 15, 1999	

DWG FILE SS2
SRB JOB 1273X
SHEET 3 OF 4

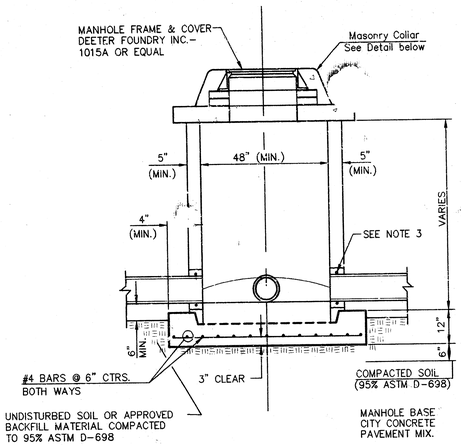

SHALLOW TYPE "P" MANHOLE

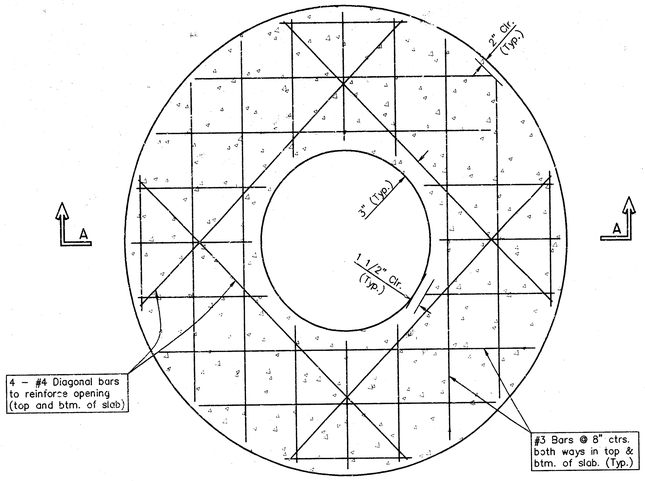

PLAN

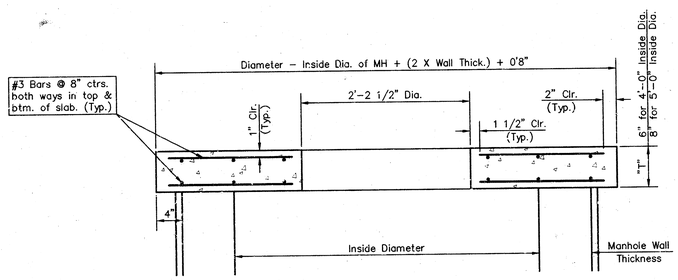

SECTION A-A

CONCRETE SLAB DETAILS

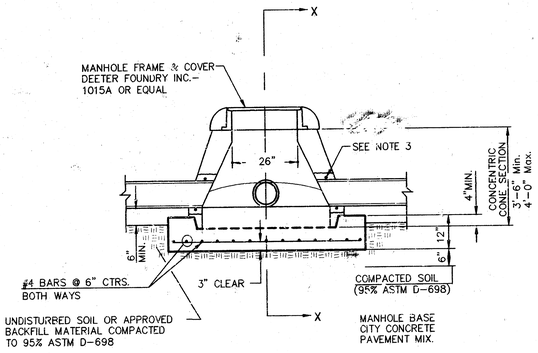

SPECIAL SHALLOW TYPE "P" MANHOLE

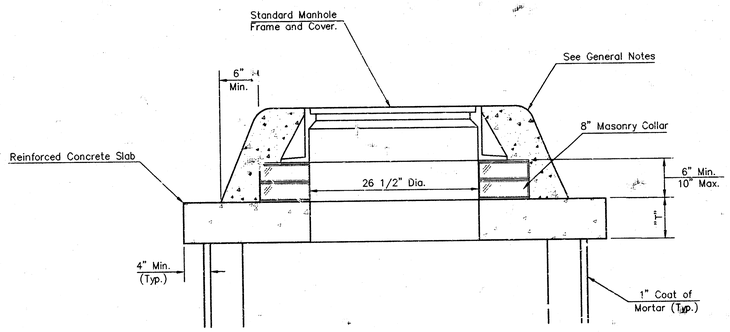

MASONRY COLLAR DETAIL

GENERAL NOTES

1. ALL PRECAST CONCRETE MANHOLE SECTIONS SHALL CONFORM TO THE LATEST REVISIONS OF A.S.T.M. C478 AS MODIFIED BY THE SPECIFICATIONS.
2. NON-SHRINK GROUT SHALL BE NON-METALLIC TYPE.
3. APPROVED FLEXIBLE WATERSTOP GASKETS SHALL BE INSTALLED TO JOIN THE SEWER TO THE MANHOLE WALL WHEN A.B.S. COMPOSITE PIPE OR P.V.C. PIPE IS USED. FOR OTHER TYPES OF PIPE THE SEWER SHALL BE GROUTED IN PLACE WITH NON-SHRINK GROUT. THE SEWER PIPE SHALL BE SUPPORTED WITH CONCRETE ENCASEMENT A MINIMUM OF 3 FEET FROM THE MANHOLE WALL AND TO THE FIRST JOINT FOR V.C.P. SUCH THAT THE JOINT REMAINS FLEXIBLE.
4. ALL INSIDE SURFACES OF THE CONCRETE MANHOLE WHICH WOULD BE EXPOSED TO SEWER GAS SHALL BE COATED WITH 2 COATS TNEMEC SERIES 66 HI-BUILD EPOXOLINE, DRY THICKNESS OF 8 MILS (MIN.)
5. EXTERIOR MANHOLE WALLS SHALL BE COATED WITH 1 COAT MOBILARMA 633 BITUMINOUS COATING.
6. JOINT SEALING COMPOUND SHALL BE KENT SEAL NO. 2 OR APPROVED EQUAL.
7. PRECAST MANHOLES SHALL BE SET AT LEAST 4 INCHES INTO THE MANHOLE BASE.
8. TOP OF MANHOLE FLOOR SLAB SHALL BE AT LEAST 3 INCHES BELOW THE FLOW LINE OF THE OUTLET PIPE TO INSURE SUFFICIENT MINIMUM THICKNESS OF SHAPED INVERT.
9. LIFTING HOLES SHALL BE FILLED WITH NON-SHRINK GROUT AND THE INTERIOR SURFACE COATED AS SPECIFIED.
10. MORTAR USED IN MASONRY CONSTRUCTION SHALL CONTAIN 8 SACKS OF CEMENT PER CUBIC YARD. CONCRETE USED IN MANHOLE BASES SHALL CONFORM TO THE REQUIREMENTS OF CONCRETE FOR CONCRETE PAVEMENT CONSTRUCTION AS SPECIFIED IN THE CITY STANDARD PAVING SPECIFICATIONS USING CITY CONCRETE PAVEMENT MIX WITHOUT AIR ENTRAINING ADMIXTURE. MORTAR SHALL BE PLACED AROUND THE MANHOLE RING AS SHOWN ON THE DRAWINGS WHEN MANHOLES ARE CONSTRUCTED IN UNPAVED AREAS. MANHOLES CONSTRUCTED WHERE PIPE SIZES ARE SMALLER THAN 24" SHALL HAVE AN INSIDE DIAMETER OF 4'. MANHOLES CONSTRUCTED WHERE PIPE SIZES ARE 24" OR LARGER SHALL HAVE AN INSIDE DIAMETER OF 5'. COMPLETED MANHOLE SHALL BE WITHOUT LEAKS AND WATER TIGHT.
11. REINFORCING STEEL SHALL BE INSTALLED IN THE MANHOLE BASES AND SHALL CONSIST OF NO. 4 BARS PLACED ON 6" CENTERS IN BOTH DIRECTIONS. THE MANHOLE BASE REINFORCEMENT SHALL BE PLACED AT LEAST 3" ABOVE THE BOTTOM OF THE MANHOLE BASE. ALL COSTS FOR FURNISHING AND INSTALLING REINFORCING STEEL SHALL BE INCLUDED IN THE UNIT PRICE BID FOR THE MANHOLE.
12. THE FLOORS OF ALL MANHOLES SHALL BE SHAPED WITH FLOW CHANNELS SUCH THAT THE MANHOLES WILL BE SELF CLEANING AND FREE OF AREAS WHERE SOLIDS COULD BE DEPOSITED AS SEWAGE FLOWS THROUGH THE MANHOLE FROM ALL INLET PIPES TO THE OUTLET PIPE. FLOW CHANNELS SHALL BE FORMED TO MATCH THE BOTTOM HALVES OF THE INFLOWING PIPES AND THE OUTFLOWING PIPE AS SHOWN BY THE DRAWINGS EXCEPT FOR INSIDE DROP MANHOLES. FLOW CHANNELS FOR INSIDE DROP MANHOLES SHALL BE CONSTRUCTED AS INDICATED BY THE DRAWING. MANHOLE FLOORS SHALL HAVE SLOPES OF 3 INCHES PER FOOT IN THE AREAS OUTSIDE OF THE FLOW CHANNELS SLOPED TOWARD THE FLOW CHANNELS. PIPES LAID THROUGH MANHOLES SHALL HAVE THE TOP HALF REMOVED TO NEAT LINES FOR THE FULL INSIDE DIAMETER OF THE MANHOLE. MANHOLE FLOORS SHALL THEN BE SHAPED AROUND THE BOTTOM HALF OF THE PIPE WHICH FORMS THE FLOW CHANNEL.
13. PIPES INSTALLED WITHIN THE EXCAVATION MADE FOR THE MANHOLE SHALL BE CRADLED WITH CONCRETE TO THE LIMITS OF THE MANHOLE EXCAVATION. WHEN CLAY PIPE IS USED, THE CRADLE SHALL EXTEND TO THE FIRST JOINT OUTSIDE THE MANHOLE. THE CRADLE SHALL BE TERMINATED AT THE CLAY PIPE JOINT IN A MANNER WHICH WILL MAINTAIN THE FLEXIBILITY OF THE JOINT. COST OF CRADLE WITHIN MANHOLE EXCAVATION OR TO CLAY PIPE JOINTS ADJACENT TO MANHOLE SHALL BE INCLUDED IN THE UNIT PRICE BID FOR THE MANHOLE.
14. MANHOLE COVER CASTINGS AND MANHOLE FRAME CASTINGS SHALL CONFORM TO THE REQUIREMENTS AS INDICATED IN THE STANDARD SPECIFICATIONS AND AS SHOWN IN THE STANDARD DETAIL DRAWING.
15. ALL BRICK USED IN MANHOLE CONSTRUCTION SHALL MEET GRADE SW OF ASTM C652 OR C62-87.

SHALLOW TYPE 'P' MANHOLE DETAILS
WICHITA, KANSAS

SRB
924 NORTH MAIN
WICHITA, KANSAS 67203
http://www.feist.com/~srb
316-264-8008
FAX 264-4621
E-mail: srb@feist.com
SAVOY, RUGGLES & BOHM, P.A.
ENGINEERING & SURVEYING

PROJECT NUMBER
895 PPS

DESIGN	DRAWN	UTILITY	REVIEW	DATE	REVISED

DWG. FILE: X:\ENG\Shallow Type P manhole

SHEET 4 OF 4

10 20 30 40