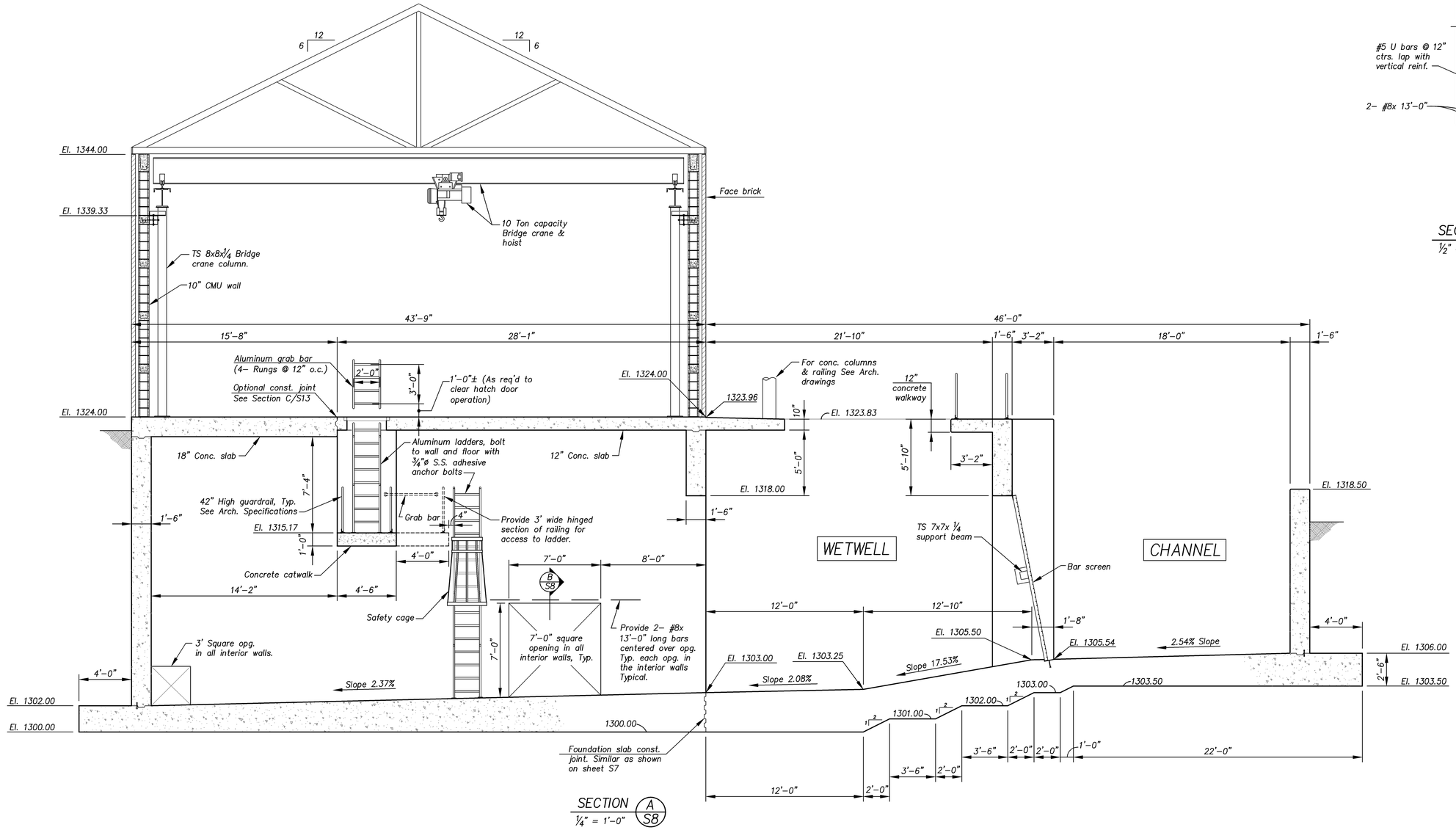

SECTION A/S8
¼" = 1'-0"

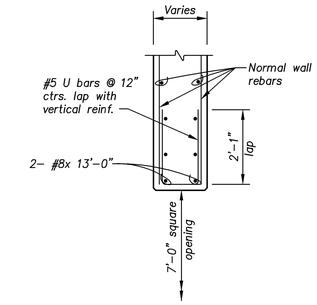

SECTION B/S8
½" = 1'-0"

CITY OF WICHITA, KANSAS

PUMP STATION NO. 11

STRUCTURAL

PUMP STATION
BUILDING SECTION

CFS
Cook, Flatt & Strobel
ENGINEERS, P.A.

DESIGNED	KMB	SCALE	As Shown
DETAILED	HAP	DATE	10-30-09
CHECKED		SHEET	S8 OF S17

J:\2008Proj\08527\DWGS\Structural 2.dwg, S8 Bldg X Sec. 11/10/2009 - 1:51pm hpham